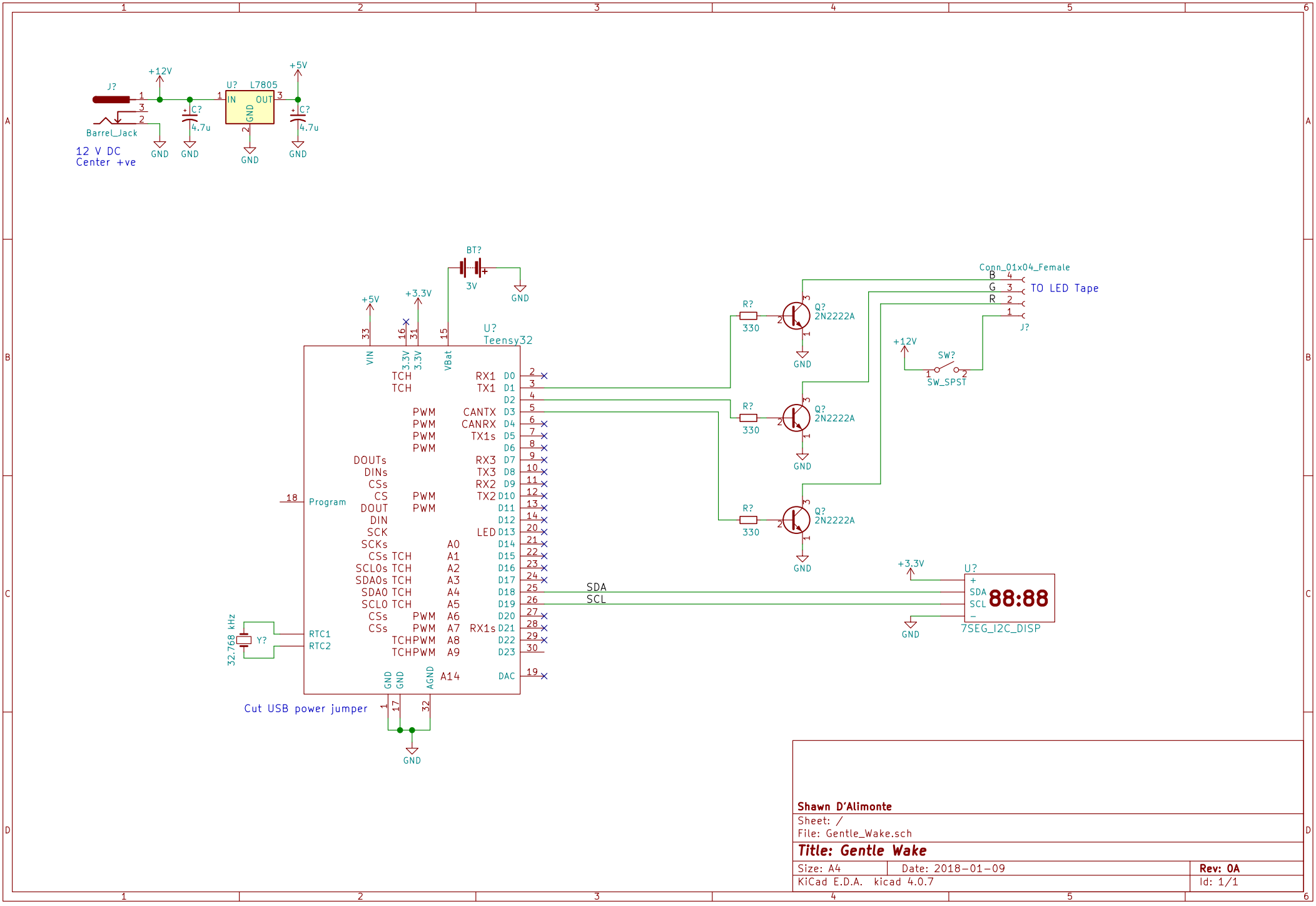

Shawn D'Alimonte

Sheet: /

File: Gentle_Wake.sch

Title: Gentle Wake

Size: A4	Date: 2018-01-09	Rev: 0A
KiCad E.D.A. kicad 4.0.7		Id: 1/1