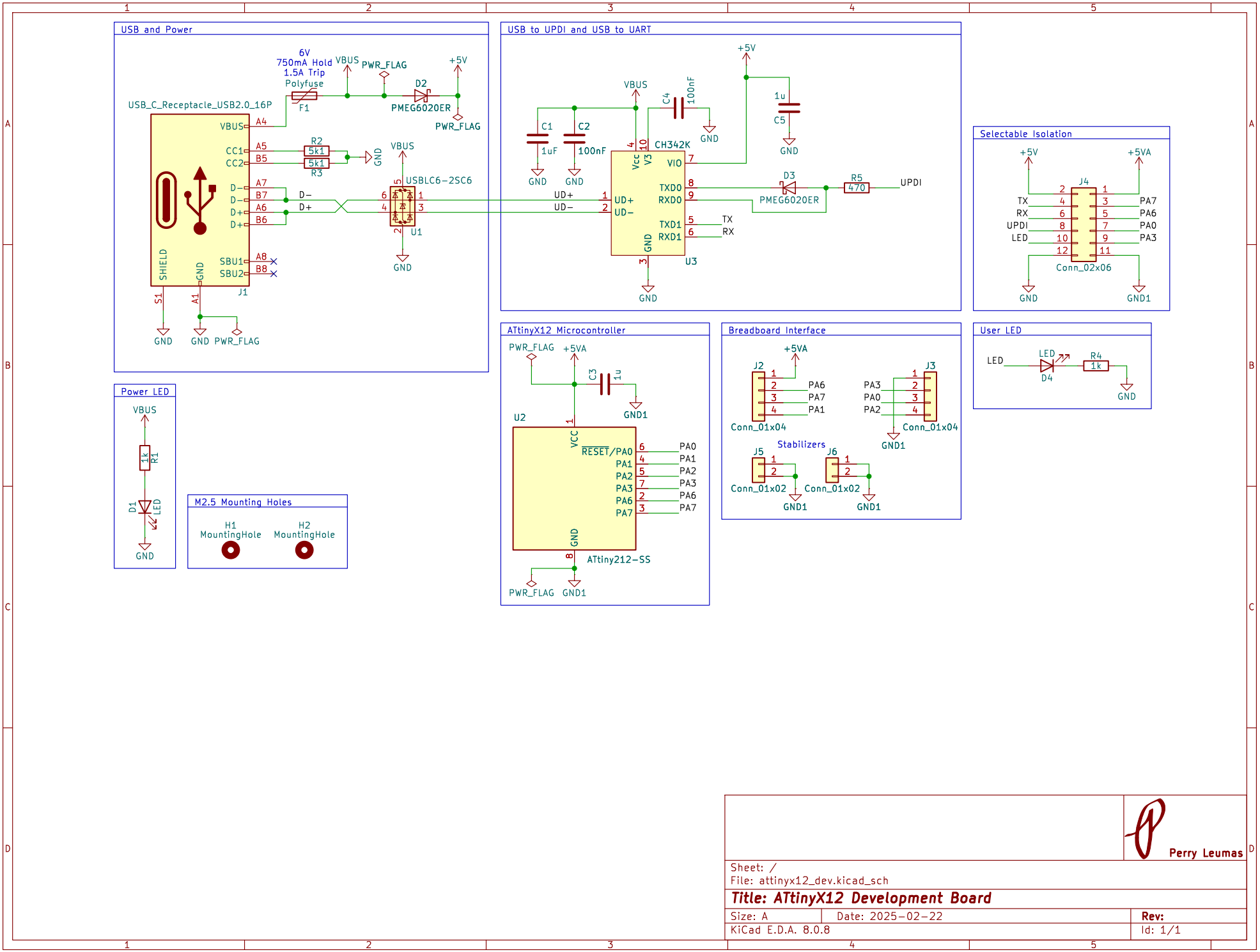

Perry Leumas

Sheet: /
File: attinyx12_dev.kicad_sch

Title: ATtinyX12 Development Board

Size: A	Date: 2025-02-22	Rev:
KiCad E.D.A. 8.0.8		Id: 1/1