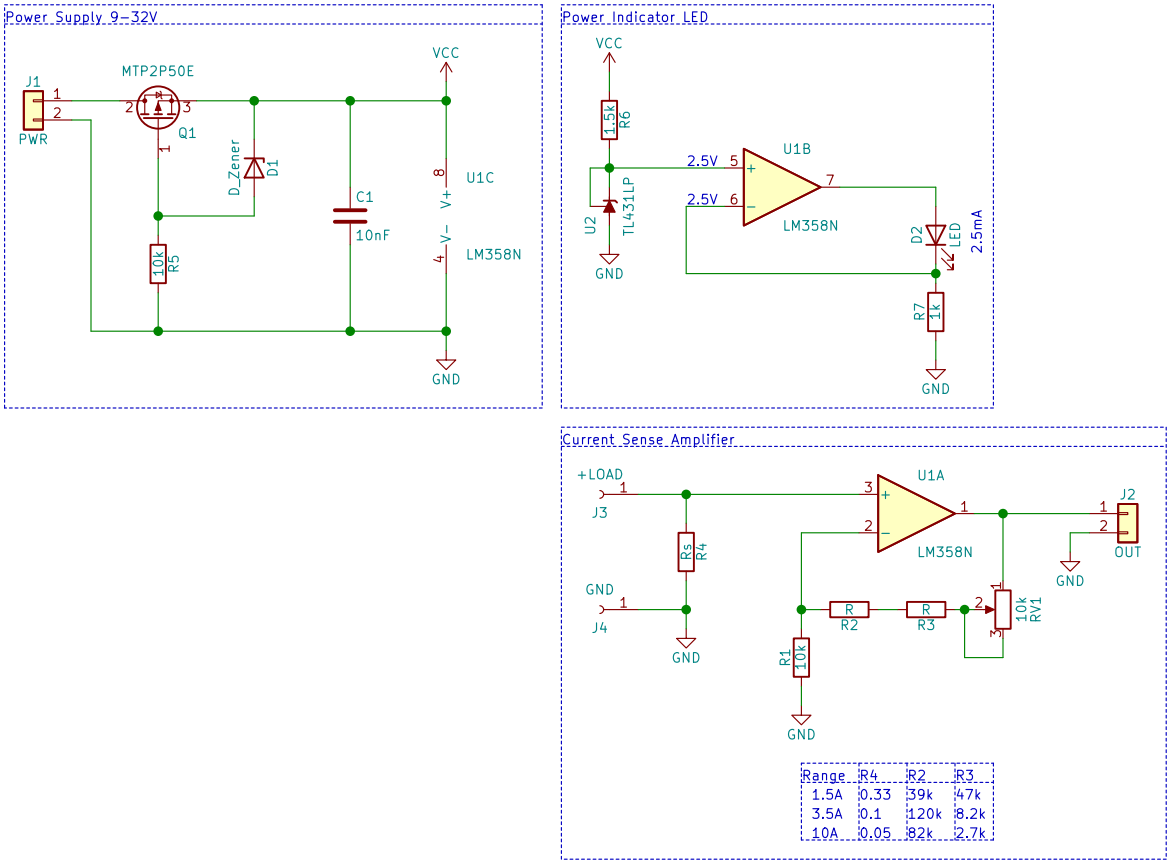

Range	R4	R2	R3
1.5A	0.33	39k	47k
3.5A	0.1	120k	8.2k
10A	0.05	82k	2.7k

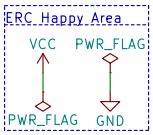

Sheet: /
File: quick_current_sensor.sch

Title:

Size: A	Date:	Rev:
KiCad E.D.A. kicad 5.1.9		Id: 1/1