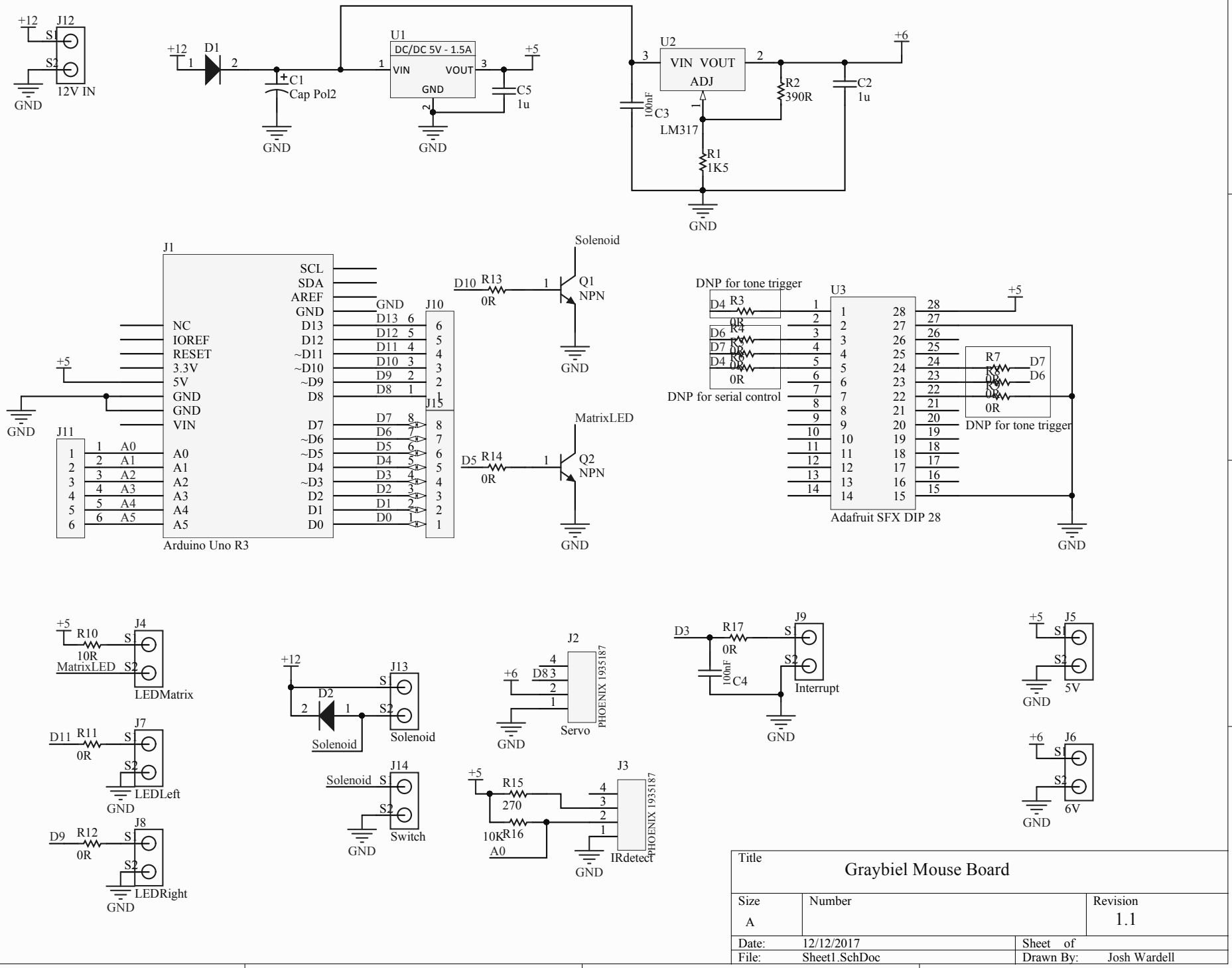
+12
J12
S1
S2
12V IN
GND
D1
C1
Cap Pol2
U1
DC/DC 5V - 1.5A
VIN
VOUT
GND
+5
C5
1u
U2
VIN VOUT
ADJ
LM317
+6
R2
390R
C2
1u
C3
100nF
R1
1K5
J1
SCL
SDA
AREF
GND
NC
IOREF
RESET
3.3V
5V
GND
GND
VIN
D13
D12
~D11
~D10
~D9
D8
D7
~D6
~D5
D4
~D3
D2
D1
D0
Arduino Uno R3
J10
J15
J11
A0
A1
A2
A3
A4
A5
Solenoid
D10
R13
0R
Q1
NPN
MatrixLED
D5
R14
Q2
DNP for tone trigger
DNP for serial control
U3
Adafruit SFX DIP 28
R7
R8
R9
D7
D6
J4
R10
10R
MatrixLED
LEDMatrix
J7
D11
R11
LEDLeft
J8
D9
R12
LEDRight
J13
D2
Solenoid
J14
Switch
J2
Servo
PHOENIX 1935187
J3
R15
270
R16
10K
IRdetect
D3
R17
C4
J9
Interrupt
J5
5V
J6
6V
Title
Graybiel Mouse Board
Size
A
Number
Revision
1.1
Date:
12/12/2017
Sheet of
File:
Sheet1.SchDoc
Drawn By:
Josh Wardell

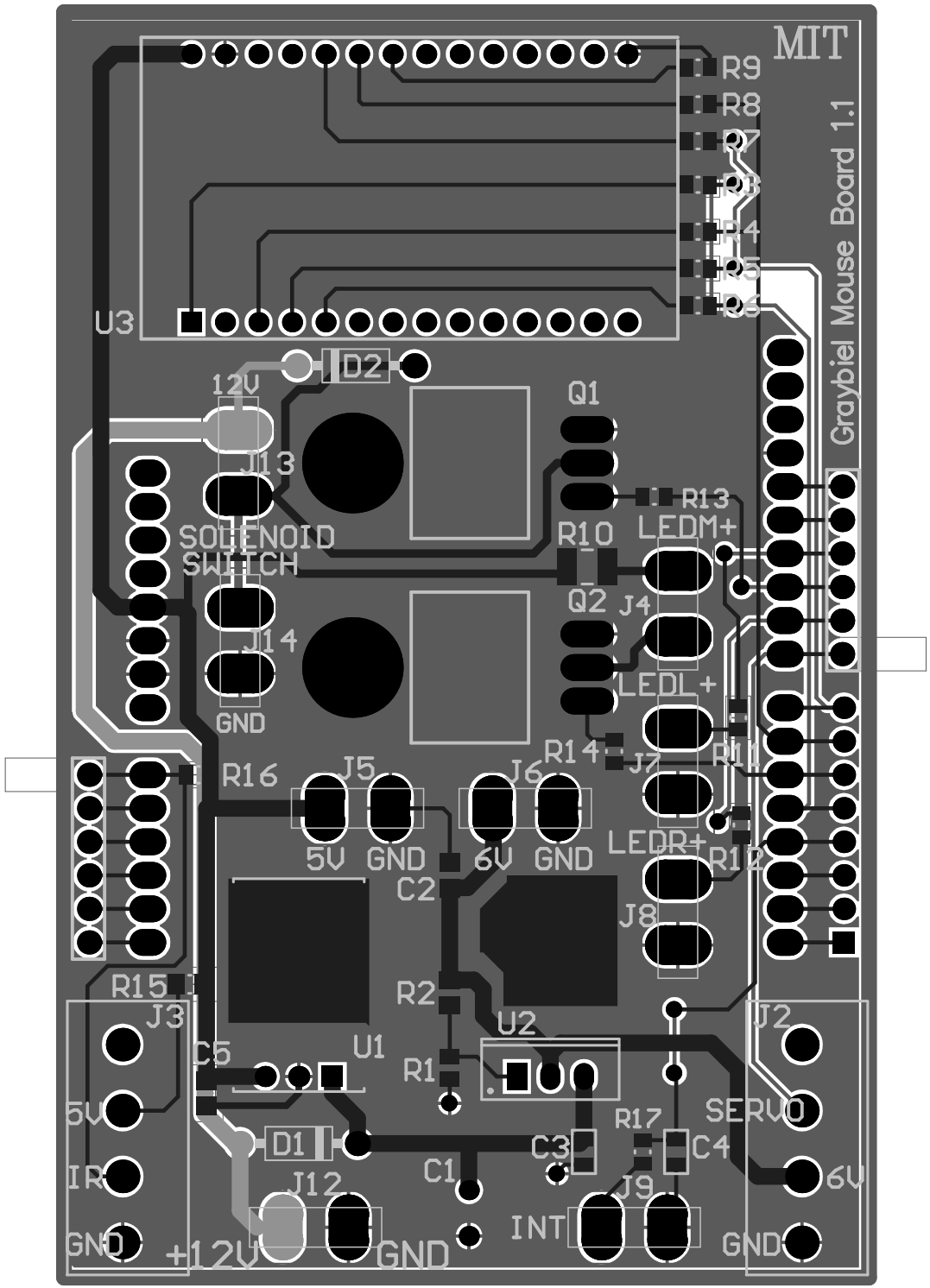
MIT
Graybiel Mouse Board 1.1
U3
R9
R8
D2
12V
Q1
J13
R13
LEDM+
SOLENOID
SWITCH
R10
Q2
J4
J14
LEDL+
GND
R14
J7
R16
J5
J6
5V
GND
6V
GND
LEDR+
C2
J8
R15
J3
R2
U2
J2
C5
U1
R1
5V
SERVO
D1
C3
R17
C4
IR
C1
J12
J9
6V
INT
GND
+12V
GND
GND

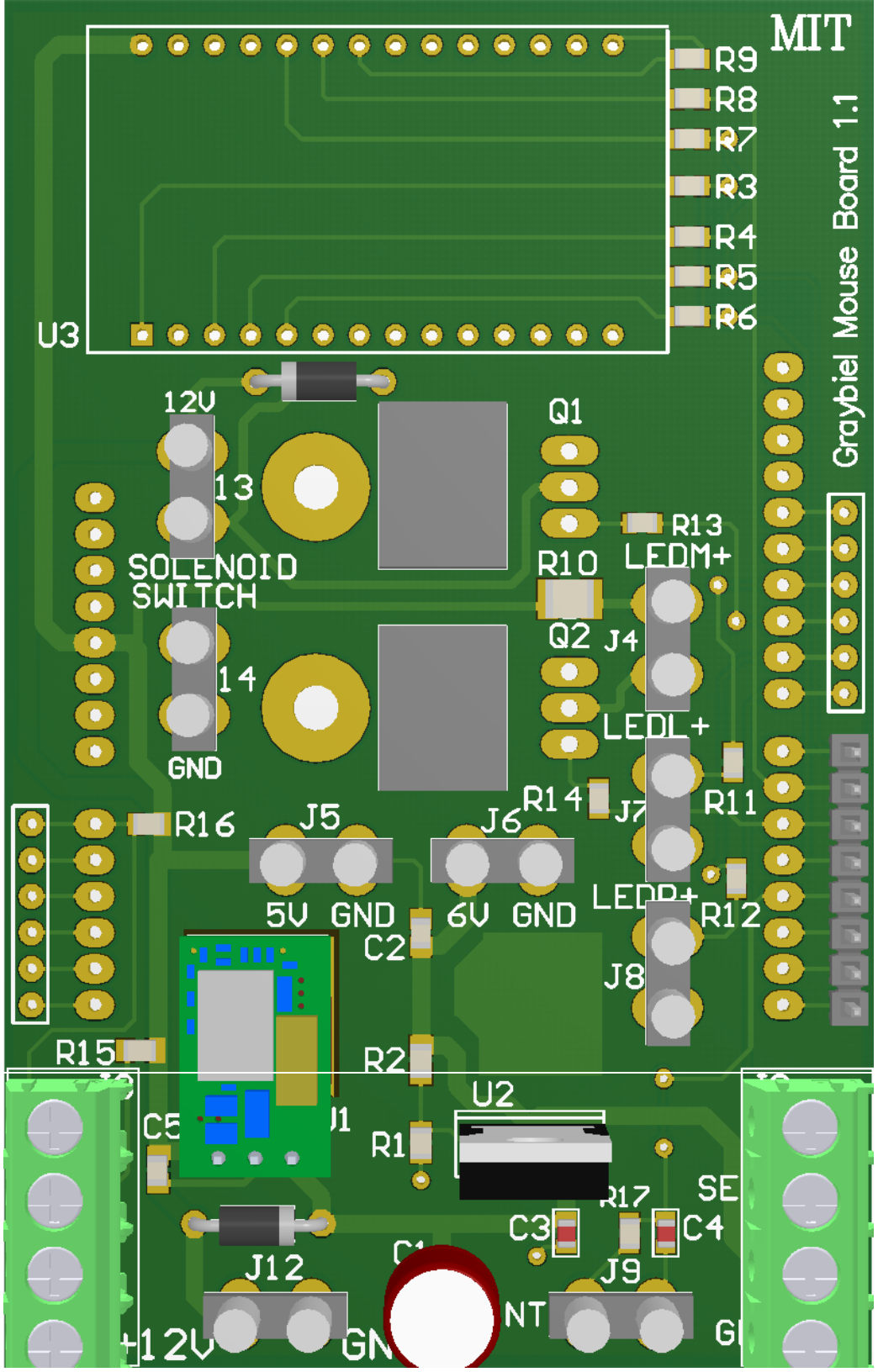
MIT
Graybiel Mouse Board 1.1
R9
R8
R7
R3
R4
R5
R6
U3
12V
13
SOLENOID
SWITCH
14
GND
Q1
R13
LEDM+
R10
Q2
J4
LEDL+
R14
J7
R11
R16
J5
J6
5V
GND
6V
GND
LEDP+
R12
C2
J8
R15
R2
U2
C5
R1
R17
SE
C3
C4
J12
J9
+12V
NT

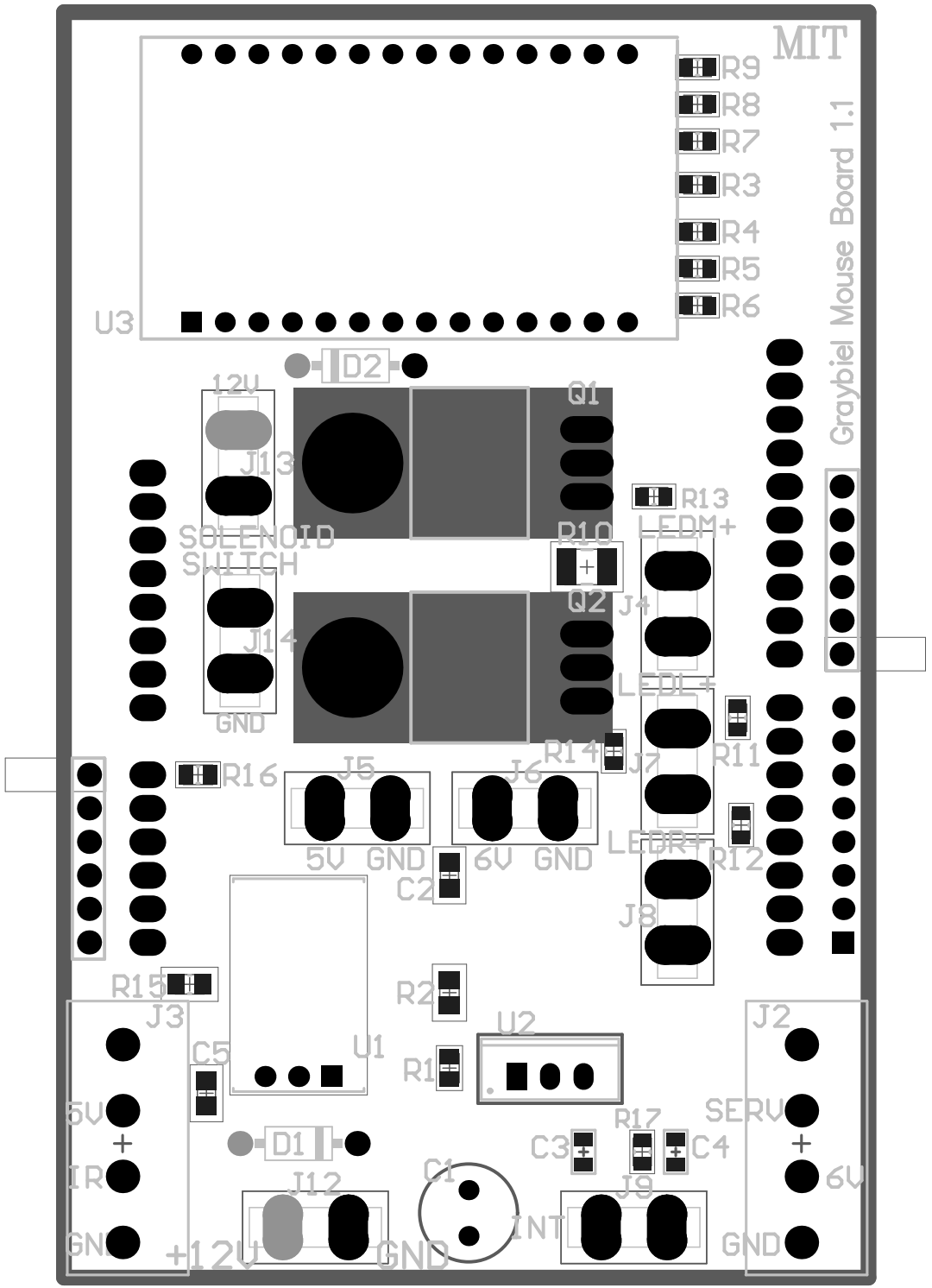
MIT
Graybiel Mouse Board 1.1
R9
R8
R7
R3
R4
R5
R6
U3
D2
12V
Q1
J13
R13
LEDM+
SOLENOID
SWITCH
R10
Q2
J4
J14
LEDL+
GND
R14
R11
R16
J5
J6
J7
5V
GND
6V
GND
LEDR+
R12
C2
J8
R15
R2
J3
U2
J2
C5
U1
R1
5V
SERV
R17
D1
C3
C4
IR
C1
J12
J9
6V
INT
GND
+12V
GND
GND

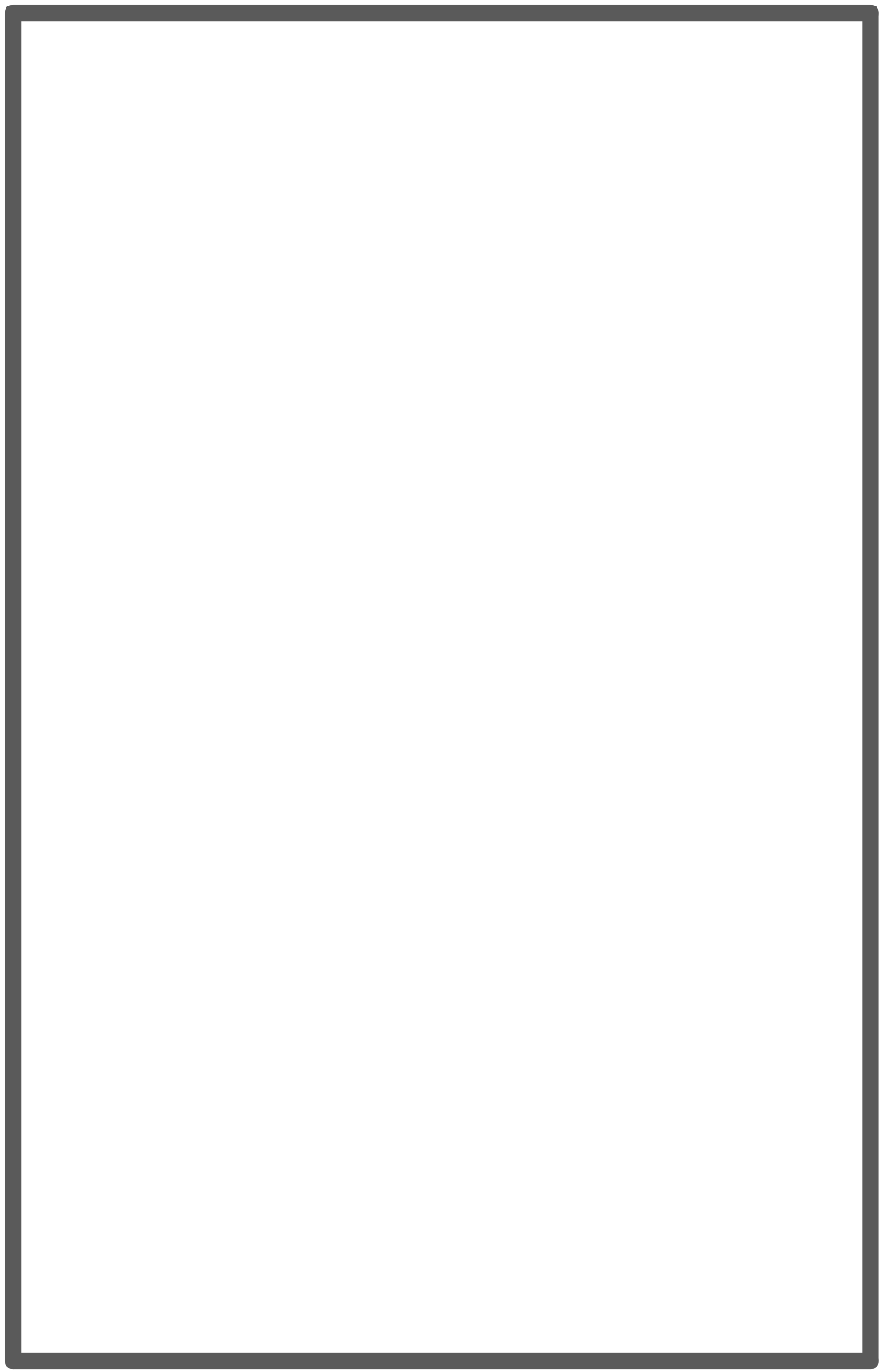

Design Rules Verification Report

Filename : C:\Users\Josh Wardell\AppData\Local\Temp\Releases\Snapshot\1\PCB1.CMPcbDoc

Warnings 0
Rule Violations 0

Warnings	
Total	0

Rule Violations	
Short-Circuit Constraint (Allowed=No) (All),(All)	0
Un-Routed Net Constraint ((All))	0
Clearance Constraint (Gap=10mil) (All),(All)	0
Power Plane Connect Rule(Relief Connect)(Expansion=20mil) (Conductor Width=10mil) (Air	0
Width Constraint (Min=12mil) (Max=100mil) (Preferred=12mil) (All)	0
Height Constraint (Min=0mil) (Max=1000mil) (Prefered=500mil) (All)	0
Hole Size Constraint (Min=1mil) (Max=150mil) (All)	0
Hole To Hole Clearance (Gap=10mil) (All),(All)	0
Minimum Solder Mask Sliver (Gap=10mil) (All),(All)	0
Silk To Solder Mask (Clearance=10mil) (Disabled)(IsPad),(All)	0
Silk to Silk (Clearance=10mil) (Disabled)(All),(All)	0
Silk primitive without silk layer	0
Net Antennae (Tolerance=0mil) (All)	0
Unpoured Polygon (Allow unpoured: False)	0
Total	0

Electrical Rules Check Report

Class	Document	Message
Warning	Sheet1.SchDoc	Net NetR1_2 has no driving source (Pin R1-2,Pin R2-1,Pin U2-1)
Warning	Sheet1.SchDoc	Part C3 is not linked to Octopart
Warning	Sheet1.SchDoc	Part C4 is not linked to Octopart
Warning	Sheet1.SchDoc	Part D1 is not linked to Octopart
Warning	Sheet1.SchDoc	Part D2 is not linked to Octopart
Warning	Sheet1.SchDoc	Part J2 is not linked to Octopart
Warning	Sheet1.SchDoc	Part J3 is not linked to Octopart
Warning	Sheet1.SchDoc	Part Q1 is not linked to Octopart
Warning	Sheet1.SchDoc	Part Q2 is not linked to Octopart
Warning	Sheet1.SchDoc	Part R10 is not linked to Octopart
Warning	Sheet1.SchDoc	Part R16 is not linked to Octopart
Warning	Sheet1.SchDoc	Part U2 is not linked to Octopart
Warning	Sheet1.SchDoc	Unconnected line (25,605) To (25,610)
Warning	Sheet1.SchDoc	Unconnected line (25,605) To (30,605)