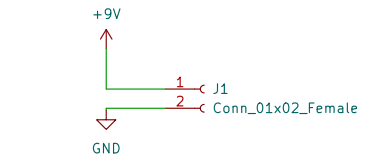

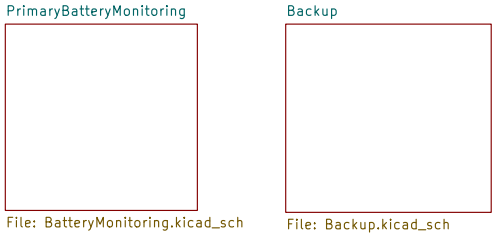

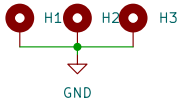

Sheet: /
File: PowerBackup.kicad_sch

Title:

Size: A4	Date:	**Rev:**
KiCad E.D.A. kicad 6.0.1-79c1e3a40b~116~ubuntu21.10.1		Id: 1/3

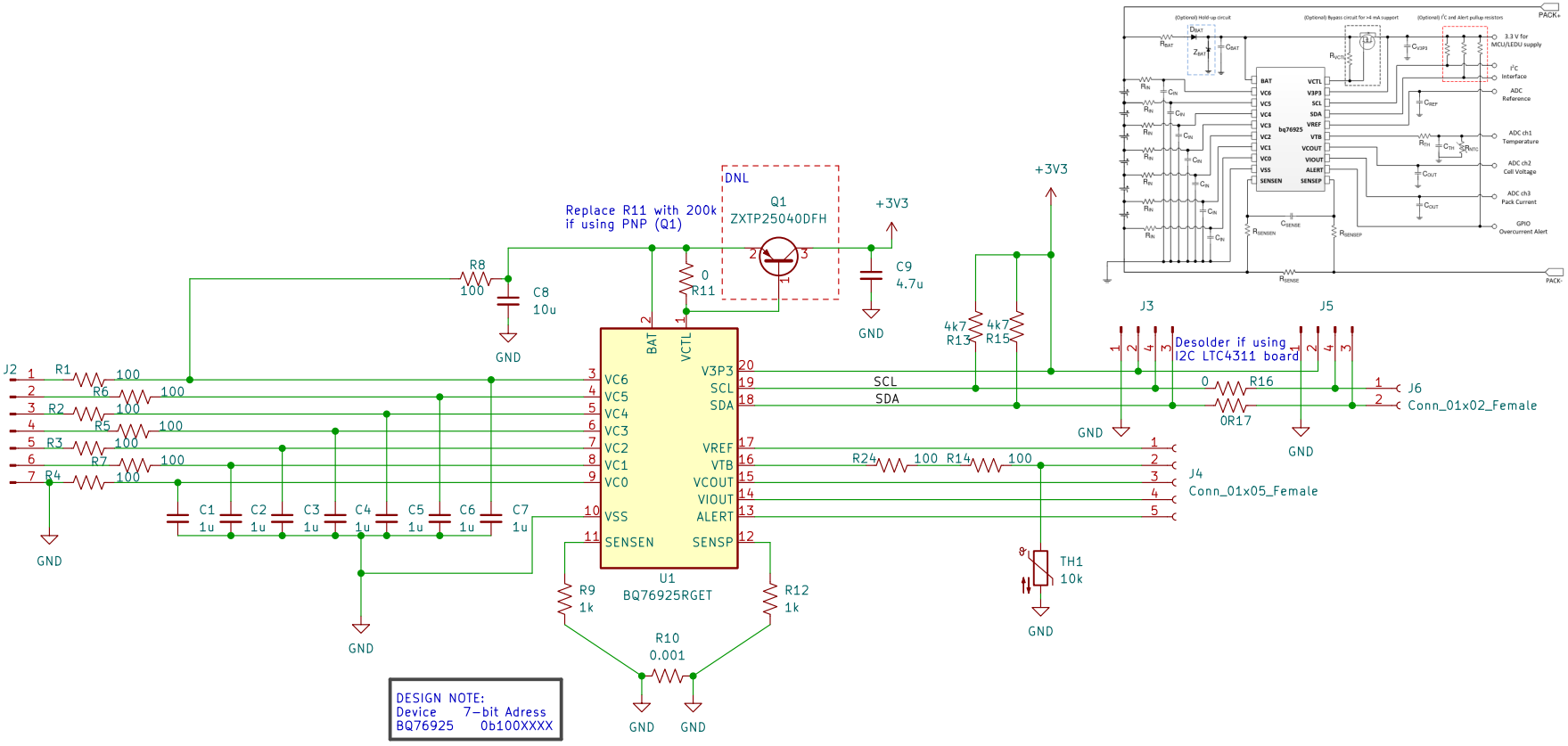

Sheet: /PrimaryBatteryMonitoring/
File: BatteryMonitoring.kicad_sch

Title:

Size: A4	Date:	Rev:
KiCad E.D.A. kicad 6.0.1-79c1e3a40b~116~ubuntu21.10.1		Id: 2/3

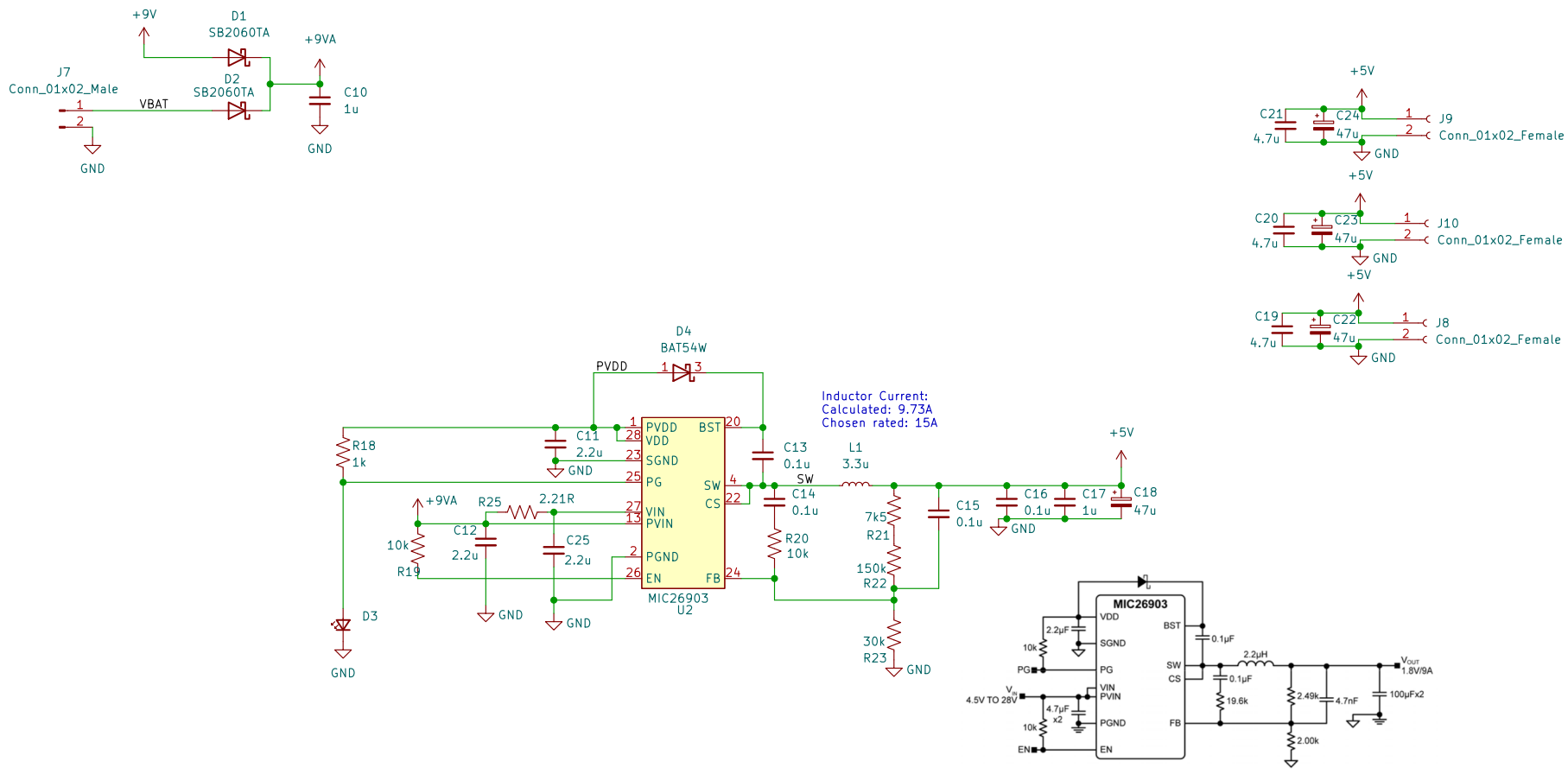

Sheet: /Backup/
File: Backup.kicad_sch

Title:

Size: A4	Date:	Rev:
KiCad E.D.A. kicad 6.0.1-79c1e3a40b~116~ubuntu21.10.1		Id: 3/3