Steven R. Dunbar
Department of Mathematics
203 Avery Hall
University of Nebraska-Lincoln
Lincoln, NE 68588-0130
http://www.math.unl.edu
Voice: 402-472-3731
Fax: 402-472-8466

Topics in Probability Theory and Stochastic Processes
Steven R. Dunbar

Classes of States and Stationary Distributions

Rating

Mathematically Mature: may contain mathematics beyond calculus with proofs.

Section Starter Question

Randomly distribute three balls between two urns, labeled A and B. Each period, select an urn at random, and if it is not empty, remove a ball from that urn and put it in the other urn. How can you find the fraction of time urn A is empty? What is that fraction of time? Does this depend on how the balls are initially distributed between the two urns?

Key Concepts

1. The states of a Markov chain partition into equivalence classes according to their type: communicating, periodic versus aperiodic, recurrent versus transient, or positive versus null recurrent.

2. Every irreducible, aperiodic Markov chain has a unique non-negative solution of

$$\sum_i \pi_i P_{ij} = \pi_j$$
$$\sum_i \pi_i = 1$$

   called a stationary distribution.

3. For an irreducible and aperiodic Markov chain,

   (a)
$$\lim_{n\to\infty} (P^n)_{ii} = \frac{1}{m_i} = \pi_{ii}$$

   and

   (b)
$$\lim_{n\to\infty} (P^n)_{ij} = \lim_{n\to\infty} (P^n)_{ii} = \pi_{ij}.$$

Vocabulary

1. State j is **accessible** from state i if $(P^n)_{ij} > 0$ for some $n \geq 1$.

2. The states of a Markov chain partition into equivalence classes according to their type: **communicating**, **periodic** versus **aperiodic**, and **recurrent** versus **transient**.

3. The Markov chain is **irreducible** if it has only one communicating class.

4. Let the random variable τ_{ii} be the **return time** to state i given the chain starts in i:

$$\tau_{ii} = \min\{n \geq 1 : X_n = i \mid X_0 = i\},$$
$$\tau_{ii} = \infty \text{ if} X_n \neq i.$$

   The distribution of τ_{ii} is f_{ii}^n. The **expected return time** m_i is $\sum_{\nu=1}^{\infty} \nu f_{ii}^{\nu}$.

5. If a state i is recurrent, then it is **positive recurrent** if, starting in i, the expected time until the process returns to state i is finite. Otherwise the state is **null recurrent**.

6. Positive recurrent and aperiodic states are **ergodic**.

7. When the limit exists, let

$$\pi_j = \lim_{n\to\infty} \frac{1}{n} \sum_{\nu=1}^{n} \mathbf{1}_{[X_\nu = j | X_0 = i]}$$

   denote the **long run proportion of time the chain spends in state** j or just the *long run proportion* for short.

8. For a positive recurrent and aperiodic Markov chain the vector (π_j) satisfies the set of the equations

$$\sum_i \pi_i P_{ij} = \pi_j$$
$$\sum_i \pi_i = 1$$

and is a **stationary probability distribution** of the Markov chain.

Mathematical Ideas

Classification of States and Stationary Distributions

Definition. State j is **accessible** from state i if $(P^n)_{ij} > 0$ for some $n \geq 1$. That is, state j is accessible from state i if and only if it is possible that the process will enter state j in n steps, for some n.

Definition. Two states **communicate** if state j is accessible from state i and state i is accessible from j.

Remark. Note that it is possible that j is accessible from i but that i and j do not communicate. An example is if j is an absorbing state accessible from i.

Proposition 1. *Communicating is an equivalence relation, so that the states of a Markov chain partition into disjoint communicating classes.*

Proof. **Reflexive:** If i communicates with itself, then i is accessible from i in n steps, and so i is accessible from itself again in n steps, so communication is reflexive.

Symmetric: If i and j communicate, then state j is accessible from state i in n_{ij} steps and state i is accessible from state j in n_{ji} steps. Therefore, state i is accessible from state j in n_{ji} steps and state j is accessible from state i in n_{ij} steps. That is, communication between i and j is a symmetric relation.

Transitive: If i communicates with j and j communicates with l, then $(P^{n_{ij}})_{ij} > 0$ for some $n_{ij} \geq 1$, and likewise $(P^{n_{jl}})_{jl} > 0$ for some $n_{jl} \geq 1$. Then $(P^{n_{ij}+n_{jl}})_{il} > (P^{n_{ij}})_{ij}(P^{n_{jl}})_{jl} > 0$ and so it is possible that the process can enter state l from i in $n = n_{ij} + n_{jl}$ steps, so l is accessible from i. Likewise, $(P^{n_{lj}})_{lj} > 0$ for some $n_{lj} \geq 1$, and $(P^{n_{ji}})_{ji} > 0$ for some $n_{ji} \geq 1$. Then $(P_{lj}^{n_{lj}}(P^{n_{ji}})_{ji} > 0$ and so it is possible that the process can enter state j in $n = n_{lj} + n_{ji}$ steps, so i is accessible from l. That is, i and l communicate and communication is transitive.

□

Definition. The period of a state i, written as $d(i)$, is the greatest common divisor of all integers $n \geq 1$ for which $(P^n)_{ii} > 0$. If $(P^n)_{ii} = 0$ for all n, define $d(i) = 0$.

Proposition 2. *1. If i communicates with j, then $d(i) = d(j)$.*

2. If state i has period $d(i)$, then there exists an integer N depending on i such that for all integers $n \geq N$, $(P^{nd(i)})_{ii} > 0$. That is, return to state i can occur at all sufficiently large multiples of the period $d(i)$.

3. If $(P^m)_{ij} > 0$, then $(P^{m+nd(i)})_{ij} > 0$ for all sufficiently large n.

Remark. The proofs of the second and third parts rely on the next lemma from number theory, a generalization of a standard result about the greatest common divisor of two integers.

Lemma 3. *Let $n_1, n_2, \ldots, n_k$ be positive integers with greatest common divisor d. Then there exists a positive integer M such that if $m \geq M$ then there exist nonnegative integers $c_1, c_2, \ldots, c_k$ such that*

$$md = \sum_{j=1}^{k} c_j n_j.$$

Proof. 1. Let

$$A = \{n : n = c_1 n_1 + \cdots + c_k n_k, c_k \text{positive integers}\}$$

and

$$B = \{b_1 m_1 + \cdots + b_j m_j : m_i \in A, b_i \in \mathbb{Z}, i = 1, \ldots, j\}.$$

2. Let d' be the least positive integer in B, where $d' = b_1 m'_1 + \cdots + b_j m'_j$. Since $m'_i \in A$ for all i, each can be written as $m'_i = c'_{1i} n_1 + \cdots + c'_{ki} n_k$.

3. The first claim is that d' is a common divisor of all elements of A. To prove the claim, let $a = c_1 n_1 + \cdots + c_k n_k \in A$. By the Division Algorithm let $a = d'q + r$ with $0 \leq r < d'$. Then

$$\begin{aligned} r &= a - d'q \\ &= a - q(b_1 m'_1 + \cdots + b_j m'_j) \\ &= (c_1 n_1 + \cdots + c_k n_k) - q\left(\sum_{i=1}^{j} b_i \sum_{\ell=1}^{k} c'_{\ell i} n_l\right) \\ &= \left(c_1 - q\sum_{i=1}^{j} b_i c_{\ell i}\right) n_1 + \cdots + \left(c_k - q\sum_{i=1}^{j} b_i c_{\ell i}\right) n_k. \end{aligned}$$

4. This means that $r \in B$. Since $0 \leq r < d'$, and d' is the least positive integer in B, then $r = 0$ and d' is a divisor of a, establishing the first claim.

5. For simplicity $d' = d = \gcd(n_1, \ldots, n_k)$. Rearrange the terms in the representation of $d = b_1 m_1 + \cdots + b_j m_j = a_1 n_1 + \cdots + a_k n_k$ so that the terms with positive coefficients are written first. Thus $d = N_1 - N_2$ with $N_1 \in A$ and $N_2 \in A$. Let M be the positive integer N_2^2/d. Every integer $m \geq M$ can be written as $m = M + K = N_2^2/d + K$, with $K \geq 0$. Using the Division Algorithm $K = q'N_2/d + b$ with $0 \leq b < N_2/d$ and the integer $q' = \lfloor (N_2/d)/k \rfloor$. Now $md = N_2^2 + (q'N_2/d + b)d = N_2(N_2 + j - b) + bN_1$.

6. Since $N_2 \in A$ and $N_1 \in A$, then there exist nonnegative integers $c_1, c_2, \ldots, c_k$ such that

$$md = \sum_{j=1}^{k} c_j n_j.$$

□

Proof. 1. (a) If i communicates with j, then $(P^{n_{ij}})_{ij} > 0$ for some $n_{ij} \geq 1$ and $(P^{n_{ji}})_{ji} > 0$ for some $n_{ji} \geq 1$. Additionally since i and j communicate, $(P^{n_{ii}})_{n_{ii}} > 0$ for some n_{ii}.

(b) Then

$$(P^{n_{ji}+n_{ii}+n_{ij}})_{jj} \geq (P^{n_{ji}})_{ji} \cdot (P^{n_{ii}})_{jj} \cdot (P^{n_{ij}})_{ij} > 0.$$

Furthermore, $(P^{2n_{ii}})_{ii} > 0$, so

$$(P^{n_{ji}+2n_{ii}+n_{ij}})_{jj} \geq (P^{n_{ji}})_{ji} \cdot (P^{2n_{ii}})_{ii} \cdot (P^{n_{ij}})_{ij} > 0.$$

(c) This means that $d(j)$ divides $n_{ji} + n_{ii} + n_{ij}$ and $d(j)$ divides $n_{ji} + 2n_{ii} + n_{ij}$ so $d(j)$ divides the difference n_{ii}.

(d) Now $d(j)$ is a divisor of n_{ii} and $d(i) = \gcd(n_{ii})$ so $d(j) \leq d(i)$ and $d(i) \leq d(j)$

2. (a) For state i, let its equivalence class of communicating states be labeled $i = 1, \ldots, k$. For each state j, $1 \leq j \leq k$, there is an m_{ij} such that $(P^{m_{ij}})_{ij} > 0$ and an m_{ji} such that $(P^{m_{ji}})_{ji} > 0$.

(b) Let $n_j = m_{ij} + m_{ji}$. Then

$$(P^{n_j})_{ii} = (P^{m_{ij}+m_{ji}})_{ii} \geq (P^{m_{ij}})_{ij}(P^{m_{ji}})_{ji} > 0.$$

That is, the probability of a return to i from i in n_j steps is at least as great as the probability of an excursion from i to j in m_{ij} steps with return to i from j in m_{ji} steps.

(c) Next note that if $(P^{n_j})_{ii} > 0$ implies that for any positive integer c_j, $(P^{c_j n_j})_{ii} > 0$, that is, the probability of c_j sequential returns is still positive.

Should assert here that $d(i)$ is the $\gcd(n_1, \ldots, n_k)$. (Note: Certainly by the previous, $d(i)$ is a divisor, but is it the greatest?)

(d) By the number theoretic Lemma 3, there exists N and positive integers $c_1, \ldots, c_k$ such that if $n \geq N$

$$(P^{nd(i)})_{ii} = (P^{c_1 n_1 + \ldots c_k n_k})_{ii} \geq (P^{c_1 n_1})_{ii} \cdot \cdots \cdot (P^{c_k n_k})_{ii} > 0.$$

3.
$$(P^{m+nd(i)})_{ji} \geq (P^{nd(i)})_{ii}(P^m)_{ji}.$$
That is, the probability of an excursion to j from i in $m+nd(i)$ steps is at least as great as the probability of an excursion from i to i in $nd(i)$ steps followed by moving to j from i in m steps. By the previous part of the lemma, there is an N such that for $n \geq N$, $(P^{nd(i)})_{ii} > 0$ and so $(P^{m+nd(i)})_{ji} > 0$ for sufficiently large n.

□

Definition. The Markov chain is **irreducible** if it has only one communicating class.

Definition. A Markov chain in which each state has period 1 is **aperiodic**.

Definition. Let the random variable τ_{ii} be the **return time** to state i given the chain starts in i:

$$\tau_{ii} = \min\{n \geq 1 : X_n = i \mid X_0 = i\}$$
$$\tau_{ii} = \infty \text{ if} X_n \neq i$$

Definition. Let the distribution of τ_{ii} be f_{ii}^n, be the probability that starting from i, the first return to state i occurs at step n. That is, for each $n \geq 1$,

$$f_{ii}^n = \mathbb{P}\left[X_n = i, X_\nu \neq i, \nu = 1, 2, \ldots, n-1 \mid X_0 = i\right].$$

Note that $f_{ii}^1 = P_{ii}$ and recursively $f_{ii}^n = \sum_{\nu=0}^n f_{ii}^\nu P_{ii}^{\nu-k}$.

Definition. The **expected return time** is $\mathbb{E}\left[\tau_{ii}\right] = m_i \sum_\nu = 0^\infty \nu f_{ii}^\nu$.

Definition. For any state i, let $f_i = \mathbb{P}\left[\tau_{ii} < \infty\right]$ denote the probability that starting in i the process will *ever* reenter state i. State i is **recurrent** if $f_i = 1$ and **transient** if $f_i < 1$.

Remark. Note that the qualities of recurrence and transience are complementary, a state is one or the other, there are no other possibilities. If the state i is transient, $f_i < 1$, then i will be visited a finite random number of times. Starting from i the number of visits N_i (counting the starting visit) to transient state i has a geometric distribution

$$\mathbb{P}\left[N_i = n\right] = f_i^{n-1}(1 - f_i), n \geq 1.$$

This observation depends on the Strong Markov property, once the chain visits state i, the future is independent of the past and the chain starts over again with the same distribution. In fact, the expected number of visits is $\mathbb{E}\left[N_i\right] = 1/(1 - f_i)$.

Proposition 4. *If state i is recurrent, then the process will reenter i infinitely often.*

Proof.

1. Suppose that the process starts in state i and i is recurrent, so that with probability 1 the process will eventually reenter state i.
2. However, by the definition of a Markov chain, it follows that the process will be starting over again when it reenters state i, and therefore state i will eventually be visited again.
3. By induction, starting in state i will reenter state i any number of times, that is, infinitely often.

□

Proposition 5.

1. *State i is recurrent if*
$$\sum_{n=1}^{\infty}(P^n)_{ii} = \infty.$$
2. *State i is transient if*
$$\sum_{n=1}^{\infty}(P^n)_{ii} < \infty.$$

Proof.

1. The two statements are complementary and equivalent so it suffices to prove the statement for transience.
2. Suppose that state i is transient, so by definition $f_i < 1$. Let N_i count the total number of returns to i.
3. Write N_i in terms of indicator variables as
$$N_i = \sum_{j=1}^{\infty} \mathbf{1}_{[X_j=i]}.$$
4. The distribution of N_i is geometric with parameter f_i so
$$\mathbb{E}\left[N_i \mid X_0 = i\right] = \frac{f_i}{1-f_i}.$$
Then
$$\infty > \mathbb{E}\left[N_i \mid X_0 = i\right] = \mathbb{E}\left[\sum_{n=1}^{\infty} \mathbf{1}_{[X_n=i|X_0=i]}\right] = \sum_{n=1}^{\infty}(P^n)_{ii}.$$

□

Corollary 1. *1. For any communication class C of a Markov chain, all states in C are either recurrent or all states in C are transient. That is*

- *if i and j communicate, and i is recurrent, then so is j*
- *if i and j communicate, and i is transient, then so is j.*

2. For an irreducible Markov chain, either all states are recurrent or all states are transient.

Proof. Left as an exercise. □

Definition. A state i is **positive recurrent** if it is recurrent and starting in i, the expected time until the process returns to state i is finite. Otherwise the state is **null recurrent**.

Proposition 6. *Suppose states i, j are both recurrent. If i and j communicate and if j is positive recurrent, $\mathbb{E}[\tau_{jj}] < \infty$, then i is positive recurrent and furthermore $\mathbb{E}[\tau_{ij}] < \infty$. In particular, all states in a recurrent communicating class are either all together positive recurrent or all together null recurrent.*

Proof.

1. Assume $\mathbb{E}[\tau_{jj}] < \infty$ and i and j communicate.
2. Choose the smallest $n \geq 1$ such that $(P^n)_{ji} > 0$.
3. With $x_0 = j$, let $A = \{x_l \neq j, 1 \leq l < n, x_n = i\}$ be the path of states visited before i. Note that $\mathbb{P}[A] > 0$.
4. Then $\mathbb{E}[\tau_{jj}] \geq \mathbb{E}[\tau_{jj} \mid A] \cdot \mathbb{P}[A] = (n + \mathbb{E}[\tau_{ij}]) \cdot \mathbb{P}[A]$. Hence $\mathbb{E}[\tau_{ij}] < \infty$.
5. With $x_0 = j$, let $\{Y_m : m \geq 1\}$ be the interarrival time between visits to state j. The distribution of Y_m is the same as the distribution of τ_{jj}. The nth revisit of the chain to state j is at time $t_n = Y_1 + \cdots + Y_n$ with $\mathbb{E}[Y_l] = \mathbb{E}[\tau_{jj}] < \infty$.
6. Let p be the probability the chain visits state i before returning to state j, given that the chain started in j. Then $p \geq \mathbb{P}[A] > 0$ where A is defined in step 3.

7. Every time the chain revisits state j, there is, independent of the past, this probability p that the chain will visit state i before revisiting state j again. Letting N denote the number of revisits the chain makes to state j until first visiting state i, N has geometric distribution with "success" probability p and so $\mathbb{E}[N] < \infty$.

8. N is a stopping time with respect to the $\{Y_m\}$ and

$$\tau_{ji} \leq \sum_{m=1}^{N} Y_m$$

and so by Wald's equation $\mathbb{E}[\tau_{ji}] \leq \mathbb{E}[N] \cdot \mathbb{E}[Y] < \infty$.

9. Finally, $\mathbb{E}[\tau_{ii}] \leq \mathbb{E}[\tau_{ij}] + \mathbb{E}[\tau_{ji}] < \infty$.

□

Proposition 7. *In an irreducible finite-state Markov chain all recurrent states are positive recurrent and has a stationary distribution satisfying $\pi = P\pi$.*

Proof. 1. If the state space is finite, then not *all* states can be transient. Otherwise, after a finite number of steps, the chain would leave every state never to return, clearly an impossibility. That is, all the communicating states are recurrent.

2. Now show that state i can't be null recurrent, that is, it must be positive recurrent.

3. For any fixed $m \geq 1$, the rows of P^m must sum to 1. That is, for any $i \in \mathcal{X}$

$$\sum_{j \in \mathcal{X}} (P^m)_{ij} = 1.$$

4. If the state is null recurrent, then for any $j \in \mathcal{X}$.

$$\lim_{n \to \infty} \frac{1}{n} \sum_{m=1}^{n} (P^m)_{ij} = 0.$$

5. Summing over j

$$\sum_{j \in \mathcal{X}} \lim_{n \to \infty} \frac{1}{n} \sum_{m=1}^{n} (P^m)_{ij} = 0.$$

6. Since the state space is finite, interchange the outer sum and the limit.

$$\lim_{n\to\infty} \sum_{j\in\mathcal{X}} \frac{1}{n} \sum_{m=1}^{n} (P^m)_{ij} = 0.$$

7. Interchange the order of summation,

$$\lim_{n\to\infty} \frac{1}{n} \sum_{m=1}^{n} \sum_{j\in\mathcal{X}} (P^m)_{ij} = 0$$

   to obtain a contradiction.

8. Thus, the state must be positive recurrent.

□

Definition. Positive recurrent and aperiodic states are **ergodic**.

Remark. Make the notation convention that $(P^0)_{ii} = 1$. Also recall the definition of the expected return time $m_i = \sum_{\nu=0}^{\infty} \nu f_{ii}^{\nu}$.

Definition. When the limit exists, let

$$\pi_j = \lim_{n\to\infty} \frac{1}{n} \sum_{\nu=1}^{n} \mathbf{1}_{[X_\nu = j | X_0 = i]}$$

denote the **long run proportion of time the chain spends in state** j or just the *long run proportion* for short. Note that the right side appears to depend on the starting state i, but the theorems below show that the long run proportion is independent of i.

Remark. Taking expected values,

$$\mathbb{E}\left[\mathbf{1}_{[X_m = j | X_0 = i]}\right] = \mathbb{P}\left[X_m = j \mid X_0 = i\right] = (P^m)_{ij}$$

so the long run proportion is alternatively defined as

$$\pi_j = \lim_{n\to\infty} \frac{1}{n} \sum_{\nu=1}^{n} (P^\nu)_{ij}$$

using the Bounded Convergence Theorem (explain how!).

Remark. Recalling that $(P^\nu)_{ij}$ is the i, j component of the matrix P^ν and using the independence on i, the long run proportions in matrix form are

$$\lim_{n\to\infty} \frac{1}{n} \sum_{\nu=1}^{n} P^\nu = \begin{pmatrix} \pi \\ \pi \\ \vdots \\ \pi \end{pmatrix} = \begin{pmatrix} \pi_1 & \pi_2 & \dots & \pi_k \\ \pi_1 & \pi_2 & \dots & \pi_k \\ \vdots & \vdots & \ddots & \vdots \\ \pi_1 & \pi_2 & \dots & \pi_k \end{pmatrix}.$$

Remark. Observing the Markov chain at a time far in the future, π_j is the probability the chain is in state j. To see this: Let N be a random observation time, with uniform distribution over the integers $\{1, 2, \dots, n\}$, independent of the chain. Then conditioning on N

$$\mathbb{P}[X_N = j] = \sum_{\nu=1}^{n} \mathbb{P}[X_\nu = j \mid X_0 = i]\, \mathbb{P}[N = m] = \frac{1}{n} \sum_{\nu=1}^{n} (P^\nu)_{ij} \approx \pi_j.$$

Definition. The **expected return time** m_i is $\sum_{\nu=1}^{\infty} \nu f_{ii}^{\nu}$.

Theorem 8 (Limit Theorem for Markov Chain Powers)**.** *For an irreducible, positive recurrent and aperiodic) Markov chain,*

1. $$\lim_{n\to\infty} (P^n)_{ii} = \frac{1}{m_i},$$

   and

2. $$\lim_{n\to\infty} (P^n)_{ij} = \lim_{n\to\infty} (P^n)_{ii}.$$

Proof. 1. Start with the recursion relation

$$(P^n)_{ji} = \sum_{\nu=0}^{n} f_{ji}^{\nu} (P^{n-\nu})_{ii}$$

for $i \neq j$ and $n \geq 0$.

2. More generally, consider the convolution type relation

$$y_n = \sum_{\nu=0}^{n} a_{n-\nu} x_\nu$$

where $a_m \geq 0$, $\sum_{\nu=0}^{\infty} a_\nu = 1$, and $\lim_{\nu\to\infty} x_\nu = c$. The goal is to prove that $\lim_{\nu\to\infty} y_\nu = c$.

3. Taking the difference with c

$$y_n - c = \sum_{\nu=0}^{n} a_{n-\nu} x_\nu - c \sum_{\nu=0}^{\infty} a_n = \sum_{\nu=0}^{n} a_{n-\nu}(x_k - c) - c \sum_{\nu=n+1}^{\infty} a_\nu.$$

4. Let $\epsilon > 0$ be given and determine $N(\epsilon)$ so that$|x_\nu - c| < \epsilon/3$ for $\nu \geq N(\epsilon)$. For $\nu \geq N(\epsilon)$

$$y_n - c = \sum_{\nu=0}^{N(\epsilon)} a_{n-\nu}(x_k - c) + \sum_{\nu=N(\epsilon)+1}^{n} a_{n-\nu}(x_k - c) - c \sum_{\nu=n+1}^{\infty} a_\nu.$$

   Then

$$|y_n - c| \leq M \sum_{\nu=0}^{N(\epsilon)} a_{n-\nu} + \frac{\epsilon}{3} \sum_{\nu=N(\epsilon)+1}^{n} a_{n-\nu} + |c| \sum_{\nu=n+1}^{\infty} a_\nu.$$

5. Choose $N(\epsilon)$ so that $|c| \sum_{\nu=n+1}^{\infty} a_\nu \leq \epsilon/3$ and

$$\sum_{\nu=0}^{N(\epsilon)} a_{n-\nu} = \sum_{\nu=n-N(\epsilon)}^{n} a_\nu \leq \frac{\epsilon}{3M}$$

   for $n \geq N(\epsilon)$.

6. Summarizing, for $n \geq N(\epsilon)$, $|y - c| \leq \epsilon/3 + \epsilon/3 + \epsilon/3 = \epsilon$.

7. Applying this to $y_n = (P^n)_{ji}$, $a_n = f^n_{ji}$, $x_n = (P^n)_{ii}$ gives the final result.

□

Remark. This proof is a purely analytic result with the probabilistic application due to the assumption that $\sum_{\nu=0}^{\infty} a_\nu = 1$.

Lemma 9. *If $a_n \to a$ as $n \to \infty$, then*

$$\lim_{n\to\infty} \frac{1}{n} \sum_{\nu=1}^{n} a_\nu = a,$$

so that if a_n converges to a, the sequence of averages converges to a.

Proof. Left as an exercise. □

Corollary 2.

$$\lim_{n\to\infty}(P^n)_{ii} = \frac{1}{\sum\limits_{\nu=0}^{\infty} \nu f_{ii}^{\nu}} = \frac{1}{m_i},$$

Theorem 10 (Fundamental Theorem of Markov Chains)**.** *For an irreducible, positive recurrent and aperiodic Markov chain* $\lim_{n\to\infty}(P^n)_{ij}$ *exists and is independent of* i*. Furthermore, letting*

$$\pi_j = \lim_{n\to\infty}(P^n)_{ij}$$

then π_j *is the unique non-negative solution of*

$$\sum_i \pi_i P_{ij} = \pi_j, \tag{1}$$

$$\sum_i \pi_i = 1. \tag{2}$$

Proof.

1. For every n and M, $1 = \sum_{j=0}^{\infty}(P^n)_{ij} \geq \sum_{j=0}^{M}(P^n)_{ij}$.
2. Letting $n \to \infty$, the limit exists, and using the Limit Theorem for Markov Chain Powers, $1 \geq \sum_{j=0}^{M}\pi_j$ for every M. Thus, $1 \geq \sum_{j=0}^{\infty}\pi_j$.
3. Now $(P^{n+1})_{ij} \geq \sum_{\nu=0}^{M}(P^n)_{i\nu}P_{\nu j}$. Again let $n \to \infty$ to obtain
$$\pi_j \geq \sum_{\nu=0}^{M}\pi_n P_{\nu j}.$$
4. Since the left side is independent of M, let $M \to \infty$ giving
$$\pi_j \geq \sum_{\nu=0}^{\infty}\pi_\nu P_{\nu j}.$$
5. Multiply by P_{ji}, sum on j
$$\pi_j \geq \sum_{\nu=0}^{\infty}\pi_\nu (P^2)_{\nu j}$$

and then by induction

$$\pi_j \geq \sum_{\nu=0}^{\infty} \pi_\nu (P^n)_{\nu j}.$$

6. In the previous inequality, suppose strict inequality holds for some j, then add over j

$$\sum_{j=0}^{\infty} \pi_j > \sum_{j=0}^{\infty} \sum_{\nu=0}^{\infty} \pi_\nu (P^n)_{\nu j} = \sum_{\nu=0}^{\infty} \pi_\nu \sum_{j=0}^{\infty} (P^n)_{\nu j} = \sum_{j=0}^{\infty} \pi_j$$

which is a contradiction. Thus

$$\pi_j = \sum_{\nu=0}^{\infty} \pi_\nu (P^n)_{\nu j}.$$

7. Let $n \to \infty$, and use that $\sum \pi_\nu$ converges and $(P^n)_{\nu j}$ is uniformly bounded to conclude

$$\pi_j = \sum_{\nu=0}^{\infty} \pi_\nu \lim_{\nu \to \infty} (P^n)_{vj} = \pi_j \sum_{\nu=0}^{\infty} \pi_\nu$$

for every j. Thus $\sum\limits_{\nu=0}^{\infty} \pi_\nu = 1$ since $\pi_j > 0$ by positive recurrence.

8. Now suppose $x = \{x_n\}$ satisfies the stationary distribution relations. Then as before

$$x_j \geq \sum_{\nu=0}^{\infty} x_\nu (P^n)_{\nu j}.$$

Let $n \to \infty$ as before to see that

$$x_j = \sum_{\nu=0}^{\infty} x_\nu (P^n)_{\nu j} = \pi_k \sum_{\nu=0}^{\infty} x_j = \pi_k.$$

□

Definition. Any vector $(\pi)_j$ satisfying equations 1 and 2 is a **stationary probability distribution** of the Markov chain. A Markov chain started according to a stationary distribution (π_j) will have this distribution for all future times.

Remark. A limiting distribution is always a stationary distribution, but the converse is not true. A Markov chain may have a stationary distribution but no limiting distribution. For example, the periodic Markov chain whose transition probability matrix is

$$P = \begin{pmatrix} 0 & 1 \\ 1 & 0 \end{pmatrix}$$

has no limiting distribution but $\pi = (1/2, 1/2)$ is a stationary distribution. Notice that this Markov chain is not aperiodic.

Remark. Note that this theorem says that a probability transition matrix for an irreducible ergodic Markov chain has a *left* eigenvector with corresponding eigenvalue 1. This is a special case of the more general Perron-Frobenius Theorem.

Remark. The Fundamental Theorem says that under appropriate conditions, the powers of the probability transition matrix converge to the stationary distribution but gives no information about the rate of convergence. The following theorem gives a first indication about the rate of convergence.

Theorem 11 (Convergence Theorem by Total Variation)**.** *Suppose that P is the transition probability matrix for an irreducible and aperiodic Markov chain with stationary distribution π. Then there exist constants $\alpha \in (0, 1)$ and $C > 0$ such that*

$$\max_{x \in \mathcal{X}} \|(P^n)_{i\cdot} - \pi\|_{TV} \leq C\alpha^n.$$

Proof.

1. Since P is irreducible and aperiodic, there exist r such that P^r has strictly positive entries.
2. Let Π be the matrix with $\mathcal{X}$ rows, each of which is the row vector π.
3. For sufficiently small $\delta > 0$, $(P^r)_{ij} \geq \delta\pi_j$ for $i, j \in \mathcal{X}$.
4. Let $\theta = 1 - \delta$. Define stochastic matrix Q by

$$P^r = (1 - \theta)\Pi + \theta Q.$$

5. Note that $M\Pi = \Pi$ for any stochastic matrix and $\Pi M = \Pi$ for any matrix with $\pi M = \pi$.

6. Claim:
$$P^{rk} = (1-\theta^k)\Pi + \theta^k Q^k.$$
Proof by Induction: For $k = 1$, this is the definition of Q. Assume the claim is true for $k = n$.
$$\begin{aligned} P^{r(k+1)} &= P^{rn}P^r = [(1-\theta^n)\Pi + \theta^n Q^n]P^r \\ &= (1-\theta^n)\Pi P^r + (1-\theta)\theta^n Q^n \Pi + \theta^{n+1} Q^n Q \end{aligned}$$
Use $\Pi P^r = \Pi$ and $Q^n \Pi = \Pi$.
$$P^{r(k+1)} = (1-\theta^{k+1})\Pi + \theta^{k+1} Q^{k+1}.$$
Hence the relation holds for all k.

7. Multiply by P^j, and rearrange to obtain
$$P^{rk+j} - \Pi = \theta^k (Q^k P^j - \Pi).$$

8. Sum the absolute value of row x_0 on both sides and divide by 2. On the right, the absolute row x_0 sum from $(Q^k P^j - \Pi)$ is at most the largest possible total variation distance between distributions (which is at most 1). Hence
$$\|(P^{rk+j})_{i\cdot} - \pi\|_{TV} \leq \theta^k.$$

9. To finish the proof, let $\alpha = \theta^{1/r}$ and $C = 1/\theta$.

□

Amusing Example of a Stationary Distribution

The following example is adapted from the solution in Lessard based on the problem originally posed in The Riddler. The interest is partly in the humorous context and partly that the context obscures that the Markov chain has more states than is at first obvious. It is also similar to a more serious application, a finite state machine, an abstract machine that can be in exactly one of a finite number of states at any given time. The finite state machine can change from one state to another in response to some inputs.

There is a bathroom in your office building that has only one toilet. There is a small sign stuck to the outside of the door that you can slide from "Vacant" to "Occupied" so that no one else will try the door handle (theoretically) when you are inside. Unfortunately, people often forget to slide the sign to "Occupied" when entering, and they often forget to slide it to "Vacant" when exiting.

Assume that 1/3 of bathroom users don't notice the sign upon entering or exiting. Therefore, whatever the sign reads before their visit, it still reads the same thing during and after their visit. Another 1/3 of the users notice the sign upon entering and make sure that it says "Occupied" as they enter. However, half the time they forget to slide it to "Vacant" when they exit. The remaining 1/3 of the users are very conscientious: They make sure the sign reads "Occupied" when they enter, and then they slide it to "Vacant" when they exit. Finally, assume that the bathroom is occupied exactly half of the time, all day, every day.

Two questions about this workplace situation:

1. If you go to the bathroom and see that the sign on the door reads "Occupied," what is the probability that the bathroom is actually occupied?
2. If the sign reads "Vacant," what is the probability that the bathroom actually is vacant?
3. Extra credit: What happens as the percentage of conscientious bathroom users changes?

The first step defines the states and transition probabilities. We might think that because the bathroom can be either *occupied* or *vacant*, and the sign in front can either read "Vacant" or "Occupied", that there should be four states, one for each possible pair of occupation state and sign. However, this is not the case. Consider the state "bathroom is occupied and the sign says it's occupied". We must distinguish between the cases where the person occupying the bathroom is conscientious (they will definitely slide the sign to "Vacant" when they leave) or not (they will leave the sign as "Occupied" after they leave).

We must therefore add more states to our Markov chain that correspond to the different ways in which the bathroom can be occupied. Consider that

there are three types of users: oblivious, forgetful, and conscientious, each of proportion 1/3.

Imagine a sequence of short times, say every minute. Using the assumption that the bathroom is occupied exactly half of the time, all day, every day we can generalize slightly to assume that the transition from state to state each minute is itself a Markov chain with transition probability

$$\begin{array}{cc} & \begin{array}{cc} O & V \end{array} \\ \begin{array}{c} O \\ V \end{array} & \begin{pmatrix} 1/2 & 1/2 \\ 1/2 & 1/2 \end{pmatrix}. \end{array}$$

It is easy to see that this chain is irreducible, recurrent and therefore positive recurrent and aperiodic. The stationary distribution is $(1/2, 1/2)$, consistent with the assumption that the bathroom is occupied exactly half of the time, all day, every day.

Now the possible transitions at each minute are:

1. A Conscientious person is in the bathroom, and it is Occupied and the sign says Occupied. This state is OCO. Either the person stays and the state remains Occupied with sign Occupied with probability 1/2, or the conscientious person leaves and the state is VV with probability 1/2.

2. A Forgetful person is in the bathroom, and it is Occupied and the sign says Occupied. This state is OFO. Either the person stays and the state remains Occupied with sign Occupied with probability 1/2, or the forgetful person leaves and the state is VO with probability $1/2 \cdot 1/2 = 1/4$ or the forgetful person leaves, changing the sign and the state is VV with probability $1/2 \cdot 1/2 = 1/4$.

3. An Oblivious person is in the bathroom, and it is Occupied and the sign says Occupied. Name this state as OOO. Either the person stays and the state remains Occupied with sign Occupied with probability 1/2, or the oblivious person leaves and the state is VO with probability 1/2.

4. A Oblivious person is in the bathroom, and it is Occupied but the sign says Vacant. Name this state as OOV. Either the person stays and the state remains Occupied with sign Vacant with probability 1/2, or the oblivious person leaves and the state is VV with probability 1/2.

5. The bathroom is Vacant, but the sign says Occupied. With probability 1/2 some person will approach, nevertheless try the door and find the true state of vacancy and enter, dealing with the sign according to their type. Then the transition is to OCO with probability 1/6, OFO with probability 1/6 and OOO with probability 1/6. With probability 1/2 the state remains VO.

6. The bathroom is Vacant, and the sign says Vacant. With probability 1/2 some person will approach, nevertheless try the door and easily find the true state of vacancy and enter, dealing with the sign according to their type. Then the transition is to OCO with probability 1/6, OFO with probability 1/6 and OOV with probability 1/6. With probability 1/2 the state remains VV.

A state transition diagram is in Figure 1.

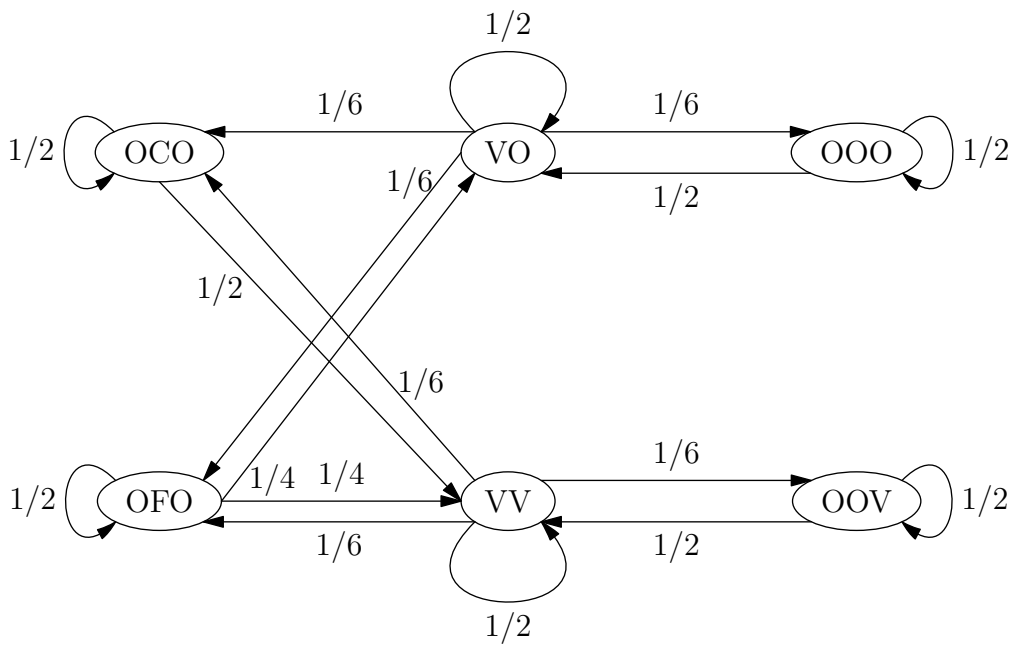

Figure 1: The state transition diagram for bathroom occupancy.

Then the transition probability matrix is

$$P = \begin{array}{c} \\ OCO \\ OFO \\ OOO \\ OOV \\ VO \\ VV \end{array} \begin{array}{c} \begin{array}{cccccc} OCO & OFO & OOO & OOV & VO & VV \end{array} \\ \begin{pmatrix} 1/2 & 0 & 0 & 0 & 0 & 1/2 \\ 0 & 1/2 & 0 & 0 & 1/4 & 1/4 \\ 0 & 0 & 1/2 & 0 & 1/2 & 0 \\ 0 & 0 & 0 & 1/2 & 1/2 & 0 \\ 1/6 & 1/6 & 1/6 & 0 & 1/2 & 0 \\ 1/6 & 1/6 & 0 & 1/6 & 0 & 1/2 \end{pmatrix} \end{array}.$$

From Figure 1 it is easy to see that the chain is irreducible and recurrent. Because of the self-loops the states are aperiodic. The stationary distribution is then the solution of

$$\pi P = \pi, \qquad \sum_i \pi_i = 1$$

with solution

$$\pi_{OCO} = \frac{1}{6}, \qquad \pi_{OFO} = \frac{1}{6}, \qquad \pi_{OOO} = \frac{1}{12},$$
$$\pi_{OOV} = \frac{1}{12}, \qquad \pi_{VO} = \frac{1}{4}, \qquad \pi_{VV} = \frac{1}{4}.$$

Note that the bathroom is still Vacant half the time, although the time splits equally over the 2 sign states.

$$\mathbb{P}\left[\text{Vacant} \mid \text{says “Vacant”}\right] = \frac{\pi_{VV}}{\pi_{VV} + \pi_{OOV}} = \frac{1/4}{1/4 + 1/12} = \frac{3}{4}$$
$$\mathbb{P}\left[\text{Occupied} \mid \text{says “Occupied”}\right] = \frac{\pi_{OCO} + \pi_{OFO} + \pi_{OOO}}{\pi_{OCO} + \pi_{OFO} + \pi_{OOO} + \pi_{VO}} = \frac{5}{8}.$$

Sources

This section is adapted from: Ross, *Introduction to Probability Models*, Taylor and Karlin, *An Introduction to Stochastic Modeling*, Karlin and Taylor, *A Second Course in Stochastic Processes* and Lessard, Lessard.

Algorithms, Scripts, Simulations

Algorithm

Bathroom Markov Chain Simulation

```
Comment Post: Example information about a simple Markov chain
Load Markov chain library
Set state names
Set transition probability matrix
Set start state
Set up Markov chain with the library
Set an example length
Create a sample path of example length
Create a second sample path of example length
Set a long path length, and a transient time
Create a long sample path
Slice the long sample path from the transient time to the end
Count appearances of each state, store in an empirical array
Compute the theoretical stable array
return Empirical stable distribution
return Theoretical stable distribution
```

Scripts

R R script for Stationary Distributions.

```r
library("markovchain")

rows = 6

stateNames <- c("OCO","OFO","OOO", "OOV", "VO", "VV")
P <- matrix(c(1/2,   0,  0,  0,   0, 1/2,
                0, 1/2,  0,  0, 1/4, 1/4,
              0,   0, 1/2, 0, 1/2,   0,
              0,   0, 0,   1/2, 1/2, 0,
              1/6, 1/6, 1/6, 0, 1/2, 0,
              1/6, 1/6,  0, 1/6, 0, 1/2),
             nrow=rows, byrow=TRUE)
rownames(P) <- stateNames
colnames(P) <- stateNames

```

```r
startState  <- "VV"

bathroom  <- new("markovchain", transitionMatrix=P,
                 states=stateNames, name="Bathroom_Occupancy")
print( summary(bathroom) )

pathLength  <- 20
bathroomHistory  <- rmarkovchain(n=pathLength, object=bathroom,
                                 t0=startState)
cat("A sample history, starting from VV: ", bathroomHistory, "\n")

largeN  <- 4000
startStable <- 2000
history  <- rmarkovchain(n=largeN, object=bathroom, t0=startState)
stablePattern  <- history[startStable:largeN]
empiricalStable <- c(mean( stablePattern == "OCO" ),
                     mean( stablePattern == "OFO" ),
                     mean( stablePattern == "OOO" ),
                     mean( stablePattern == "OOV" ),
                     mean( stablePattern == "VO"  ),
                     mean( stablePattern == "VV"  )
                    )
theorStable <- steadyStates(bathroom)
cat("Empirical stable distribution: ",  empiricalStable, "\n")
cat("Theoretical stable distribution: ", theorStable, "\n")
```

Problems to Work for Understanding

1: Provide examples of the classifications of states:

(a) A trivial two-state Markov chain in which neither state is accessible from the other.

(b) A trivial two-state Markov chain in which both states communicate.

(c) A Markov chain in which all states have period 2.

(d) A three-state Markov chain with two states absorbing and one transient state. What states are communicating in this example?

(e) An ergodic Markov chain.

2: Randomly distribute three balls between two urns, labeled A and B. Each period, select an urn at random, and if it is not empty, remove a ball from that urn and put it in the other urn. Make a Markov chain model of this situation and classify all states. In the long run what fraction of time is urn A empty? Does this depend on how the balls are initially distributed between the two urns?

3: Assume the fraction of oblivious, forgetful, and conscientious users are p, q, and r respectively, with $0 \leq p, q, r \leq 1$ and $p + q + r = 1$. Solve the bathroom problem under this general assumption.

4: Assume the fraction of oblivious, forgetful, and conscientious users are p, q, and r respectively, with $0 \leq p, q, r \leq 1$ and $p + q + r = 1$. Further assume the bathroom is occupied $2/3$ of the time, and vacant $1/3$ of the time. Solve the bathroom problem under this general assumption.

5: Assume the fraction of oblivious, forgetful, and conscientious users are p, q, and r respectively, with $0 \leq p, q, r \leq 1$ and $p + q + r = 1$. Further assume the bathroom is occupied $1 - v$ of the time, and vacant v of the time, where $0 < v < 1$. Solve the bathroom problem under this general assumption. What happens as $v \to 0$ or $v \to 1$?

6: Assume the fraction of oblivious, forgetful, and conscientious users are p, q, and r respectively, with $0 \leq p, q, r \leq 1$ and $p + q + r = 1$. Also assume that the oblivious people spend twice as long in the bathroom as the conscientious or forgetful people. Assume the bathroom is vacant v of the time, where $0 < v < 1$. Are all these assumptions consistent? Solve the bathroom problem under this general assumption.

7: Prove Corollary 1:

1. For any communication class C of a Markov chain, all states in C are either recurrent or all states in C are transient. That is

- if i and j communicate, and i is recurrent, then so is j
- if i and j communicate, and i is transient, then so is j.

2. For an irreducible Markov chain, either all states are recurrent or all states are transient.

8: If $a_n \to a$ as $n \to \infty$, then

$$\lim_{n\to\infty} \frac{1}{n} \sum_{\nu=1}^{n} a_\nu = a,$$

so that if a_n converges to a, the sequence of averages converges to a.

Reading Suggestion:

References

[1] S. Karlin and H. Taylor. *A Second Course in Stochastic Processes*. Academic Press, 1981.

[2] Sheldon M. Ross. *Introduction to Probability Models*. Elsevier, 6th edition, 1997.

[3] H. M. Taylor and Samuel Karlin. *An Introduction to Stochastic Modeling*. Academic Press, third edition, 1998.

Outside Readings and Links:

1. http://www.columbia.edu/ ks20/stochastic-I/stochastic-I-MCII.pdf
2.
3.
4.

Solutions

1:

(a)
$$\begin{pmatrix} 1 & 0 \\ 0 & 1 \end{pmatrix}.$$

(b)
$$\begin{pmatrix} 0 & 1 \\ 1 & 0 \end{pmatrix}. \text{ or } \begin{pmatrix} 1/2 & 1/2 \\ 1/2 & 1/2 \end{pmatrix}.$$

(c)
$$\begin{pmatrix} 0 & 1 \\ 1 & 0 \end{pmatrix}.$$

(d)
$$\begin{pmatrix} 1 & 0 & 0 \\ 1/2 & 0 & 1/2 \\ 0 & 0 & 1 \end{pmatrix}.$$

State 2 communicates with states 1 and 3, but that is all.

(e)
$$\begin{pmatrix} 1/2 & 1/2 & 0 \\ 1/2 & 0 & 1/2 \\ 0 & 1/2 & 1/2 \end{pmatrix}.$$

2: The 4 states are the number of balls in urn A, from 0 to 3.

$$P = \begin{pmatrix} 1/2 & 1/2 & 0 & 0 \\ 1/2 & 0 & 1/2 & 0 \\ 0 & 1/2 & 0 & 1/2 \\ 0 & 0 & 1/2 & 1/2 \end{pmatrix}.$$

The Markov chain is ergodic, all states communicate, are positive recurrent, aperiodic, there are no absorbing or transient states, the Markov chain is irreducible. The stationary distribution is $\pi = [1/4, 1/4, 1/4, 1/4]$ so in the long run urn A spends $1/4$ of the time empty. This does not depend on the initial distribution of balls.

3: The transition probability matrix is

$$P = \begin{array}{c} \\ OCO \\ OFO \\ OOO \\ OOV \\ VO \\ VV \end{array} \begin{array}{c} \begin{array}{cccccc} OCO & OFO & OOO & OOV & VO & VV \end{array} \\ \begin{pmatrix} 1/2 & 0 & 0 & 0 & 0 & 1/2 \\ 0 & 1/2 & 0 & 0 & 1/4 & 1/4 \\ 0 & 0 & 1/2 & 0 & 1/2 & 0 \\ 0 & 0 & 0 & 1/2 & 1/2 & 0 \\ r/2 & q/2 & p/2 & 0 & 1/2 & 0 \\ r/6 & q/6 & 0 & p/6 & 0 & 1/2 \end{pmatrix} \end{array}.$$

The stationary distribution is

$$\left(\frac{r}{2}, \frac{q}{2}, \frac{p(q+2p)}{4}, \frac{p(2r+q)}{4}, \frac{q+2p}{4}, \frac{2r+q}{4} \right).$$

4: See the next solution with $v = 1/3$.

5: The transition probability matrix is

$$P = \begin{array}{c} \\ OCO \\ OFO \\ OOO \\ OOV \\ VO \\ VV \end{array} \begin{array}{c} \begin{array}{cccccc} OCO & OFO & OOO & OOV & VO & VV \end{array} \\ \begin{pmatrix} 1-v & 0 & 0 & 0 & 0 & v \\ 0 & 1-v & 0 & 0 & 1/4 & 1/4 \\ 0 & 0 & 1-v & 0 & v & 0 \\ 0 & 0 & 0 & 1-v & v & 0 \\ r(1-v) & q(1-v) & p(1-v) & 0 & v & 0 \\ r(1-v) & q(1-v) & 0 & p(1-v) & 0 & v \end{pmatrix} \end{array}.$$

The stationary distribution is:

$$\left(r(1-v), q(1-v), \frac{p(q+2p)(1-v)}{2}, \frac{p(2r+q)(1-v)}{2}, \frac{(q+2p)v}{2}, \frac{(2r+q)v}{2}\right).$$

As $v \to 1$, the stationary distribution tends to $\left(0,0,0,0,\frac{(q+2p)}{2},\frac{(2r+q)}{2}\right)$ As $v \to 0$, the stationary distribution tends to $\left(r, q, \frac{p(q+2p)}{2}, \frac{p(2r+q)}{2}, 0, 0\right)$

6: Suppose the probability of an oblivious person entering the bathroom is w. Then proportion of time that the bathroom is occupied by an oblivious person is $p(1-w)$. Likewise, and as in the previous problem, the proportion of time the bathroom is occupied by forgetful and conscientious people is $q(1-v)$ and $r(1-v)$ respectively. If the probability of occupancy by forgetful and conscientious people is equal at $1-v$ then the assumption that oblivious people spend twice as much time in the bathroom is $p(1-w) = (q+r)(1-v)$ or $w = 1 - \frac{q+r}{p}(1-v) = \frac{1-p}{p}(1-v)$. Since $0 < w < 1$, this puts some restrictions depending on p and v.

The transition probability matrix is

$$P = \begin{array}{c} \\ OCO \\ OFO \\ OOO \\ OOV \\ VO \\ VV \end{array} \begin{array}{c} \begin{array}{cccccc} OCO & OFO & OOO & OOV & VO & VV \end{array} \\ \begin{pmatrix} 1-v & 0 & 0 & 0 & 0 & v \\ 0 & 1-v & 0 & 0 & 1/4 & 1/4 \\ 0 & 0 & 1-w & 0 & w & 0 \\ 0 & 0 & 0 & 1-w & w & 0 \\ r(1-v) & q(1-v) & p(1-v) & 0 & v & 0 \\ r(1-v) & q(1-v) & 0 & p(1-v) & 0 & v \end{pmatrix} \end{array}.$$

7:

1. First consider the statement: If i and j communicate, and i is recurrent, then so is j.

   (a) If i and j communicate, then there is an $r > 0$ such that $(P^r)_{ji} > 0$ and an $s > 0$ such that $(P^s)_{ij} > 0$.

   (b) If i is recurrent, then $\sum_{n=1}^{\infty}(P^n)_{ii} = \infty$ so also $\sum_{n=r+s+1}^{\infty}(P^n)_{ii} = \infty$

(c) $(P^n)_{jj} > (P^r)_{ji}(P^{n-r-s})_{ii}(P^s)_{ij}$, that is the probability of going from j to j is greater than the probability of an excursion from j to i, then from i to i, and from i to j.

(d) Then

$$\sum_{n=1}^{\infty}(P^n)_{jj} > \sum_{n=1}^{\infty}(P^r)_{ji}(P^{n-r-s})_{ii}(P^s)_{ij} = (P^r)_{ji}\left(\sum_{n=r+s+1}^{\infty}(P^{n-r-s})_{ii}\right)(P^s)_{ij} = \infty$$

Therefore, j is recurrent.

2. Suppose i and j communicate, and i is transient, but j is recurrent. Since j communicates with i and j is recurrent, by the previous proof then i must be recurrent, a contradiction. Therefore, j must be transient.

3. The statement follows from the definition of irreducible and the previous proofs.

8: Let $\epsilon > 0$ be given. Choose N_1 so large that $|a_n - a| < \epsilon/2$ for $n > N_1$. Choose $N_2 > N_1$ so large that $\frac{1}{n}\sum_{\nu=1}^{N_1}|a_\nu - a| < \epsilon/2$ for $n > N_2$. Then for $n > N_2$,

$$\begin{aligned}\left|\frac{1}{n}\sum_{\nu=1}^{n}a_n - a\right| &\leq \frac{1}{n}\sum_{\nu=1}^{N_1}|a_n - a| + \frac{1}{n}\sum_{\nu=N_1+1}^{n}|a_n - a| \\ &\leq \frac{1}{n}\sum_{\nu=1}^{N_1}|a_n - a| + \frac{1}{n}\sum_{\nu=1}^{n}|a_n - a| \\ &< \frac{\epsilon}{2}\frac{1}{n}\sum_{\nu=N_1+1}^{n}\frac{\epsilon}{2} \\ &< \frac{\epsilon}{2} + \frac{\epsilon}{2} = \epsilon.\end{aligned}$$

Therefore

$$\lim_{n\to\infty}\frac{1}{n}\sum_{\nu=1}^{n}a_\nu = a,$$

I check all the information on each page for correctness and typographical errors. Nevertheless, some errors may occur and I would be grateful if you would alert me to such errors. I make every reasonable effort to present current and accurate information for public use, however I do not guarantee the accuracy or timeliness of information on this website. Your use of the information from this website is strictly voluntary and at your risk.

I have checked the links to external sites for usefulness. Links to external websites are provided as a convenience. I do not endorse, control, monitor, or guarantee the information contained in any external website. I don't guarantee that the links are active at all times. Use the links here with the same caution as you would all information on the Internet. This website reflects the thoughts, interests and opinions of its author. They do not explicitly represent official positions or policies of my employer.

Information on this website is subject to change without notice.

Steve Dunbar's Home Page, `http://www.math.unl.edu/~sdunbar1`

Email to Steve Dunbar, `sdunbar1 at unl dot edu`

Last modified: Processed from LaTeX source on June 15, 2020