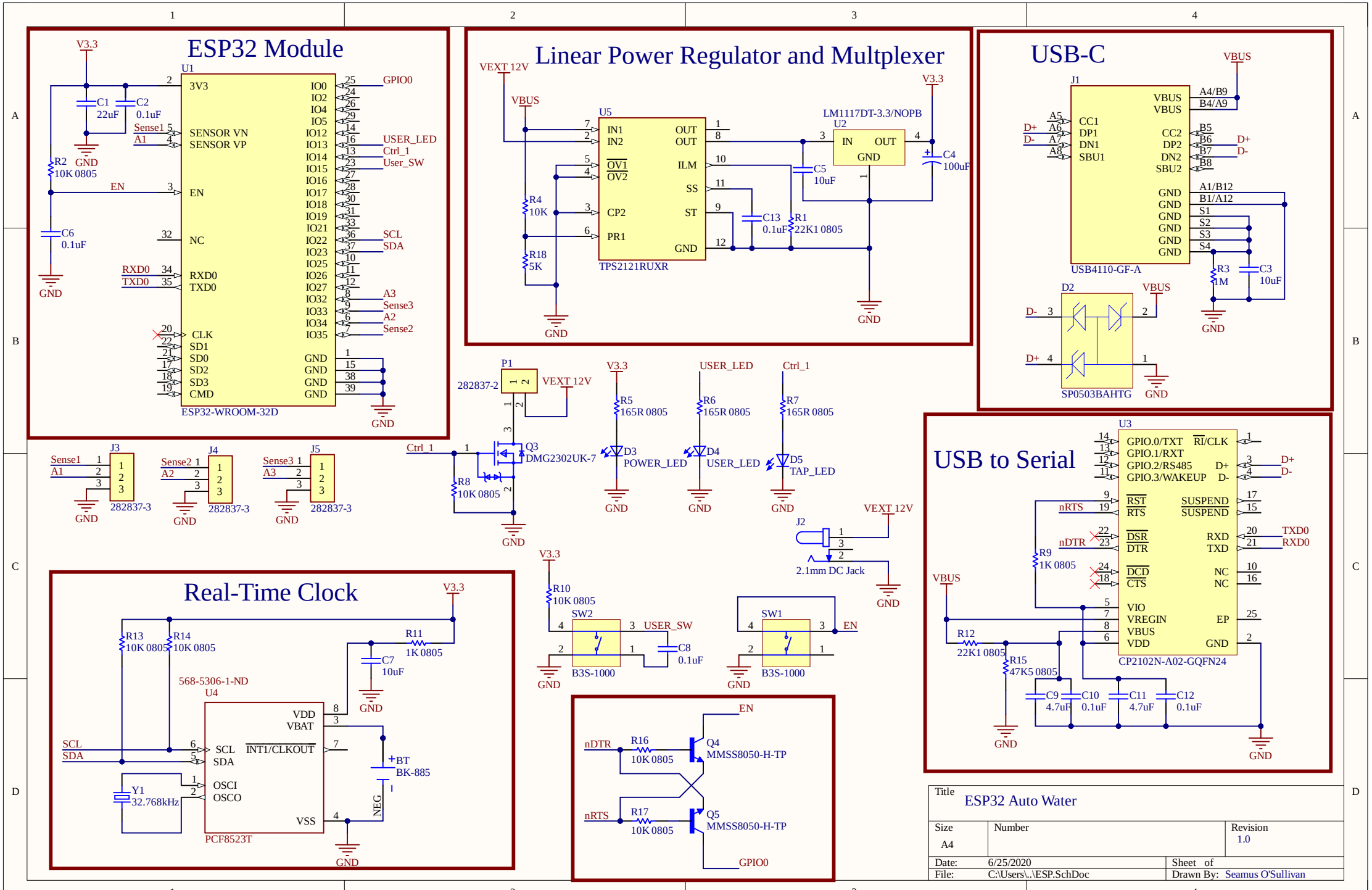
ESP32 Module
U1
3V3
SENSOR VN
SENSOR VP
EN
NC
RXD0
TXD0
CLK
SD1
SD0
SD2
SD3
CMD
IO0
IO2
IO4
IO5
IO12
IO13
IO14
IO15
IO16
IO17
IO18
IO19
IO21
IO22
IO23
IO25
IO26
IO27
IO32
IO33
IO34
IO35
GND
ESP32-WROOM-32D
V3.3
C1 22uF
C2 0.1uF
R2 10K 0805
C6 0.1uF
Sense1
A1
RXD0
TXD0
GPIO0
USER_LED
Ctrl_1
User_SW
SCL
SDA
A3
Sense3
A2
Sense2
Linear Power Regulator and Multplexer
VEXT 12V
VBUS
U5
IN1
IN2
OV1
OV2
CP2
PR1
OUT
ILM
SS
ST
TPS2121RUXR
R4 10K
R18 5K
LM1117DT-3.3/NOPB
U2
IN
OUT
C5 10uF
C4 100uF
C13 0.1uF
R1 22K1 0805
USB-C
J1
VBUS
CC1
DP1
DN1
SBU1
CC2
DP2
DN2
SBU2
A4/B9
B4/A9
B5
B6
B7
B8
A1/B12
B1/A12
S1
S2
S3
S4
D+
D-
USB4110-GF-A
R3 1M
C3 10uF
D2
SP0503BAHTG
P1
282837-2
Q3
DMG2302UK-7
R8 10K 0805
R5 165R 0805
R6 165R 0805
R7 165R 0805
D3 POWER_LED
D4 USER_LED
D5 TAP_LED
J3
J4
J5
282837-3
J2
2.1mm DC Jack
R10 10K 0805
SW2
SW1
B3S-1000
USER_SW
EN
C8 0.1uF
USB to Serial
U3
GPIO.0/TXT
GPIO.1/RXT
GPIO.2/RS485
GPIO.3/WAKEUP
RI/CLK
RST
RTS
DSR
DTR
DCD
CTS
SUSPEND
RXD
TXD
NC
VIO
VREGIN
VBUS
VDD
EP
GND
CP2102N-A02-GQFN24
nRTS
nDTR
TXD0
RXD0
R9 1K 0805
R12 22K1 0805
R15 47K5 0805
C9 4.7uF
C10 0.1uF
C11 4.7uF
C12 0.1uF
Real-Time Clock
R13 10K 0805
R14 10K 0805
R11 1K 0805
C7 10uF
568-5306-1-ND
U4
VDD
VBAT
SCL
SDA
INT1/CLKOUT
OSCI
OSCO
VSS
PCF8523T
Y1 32.768kHz
BT
BK-885
NEG
nDTR
nRTS
R16 10K 0805
R17 10K 0805
Q4 MMSS8050-H-TP
Q5 MMSS8050-H-TP
GPIO0
Title
ESP32 Auto Water
Size
A4
Number
Revision
1.0
Date: 6/25/2020
Sheet of
File: C:\Users\..\ESP.SchDoc
Drawn By: Seamus O'Sullivan

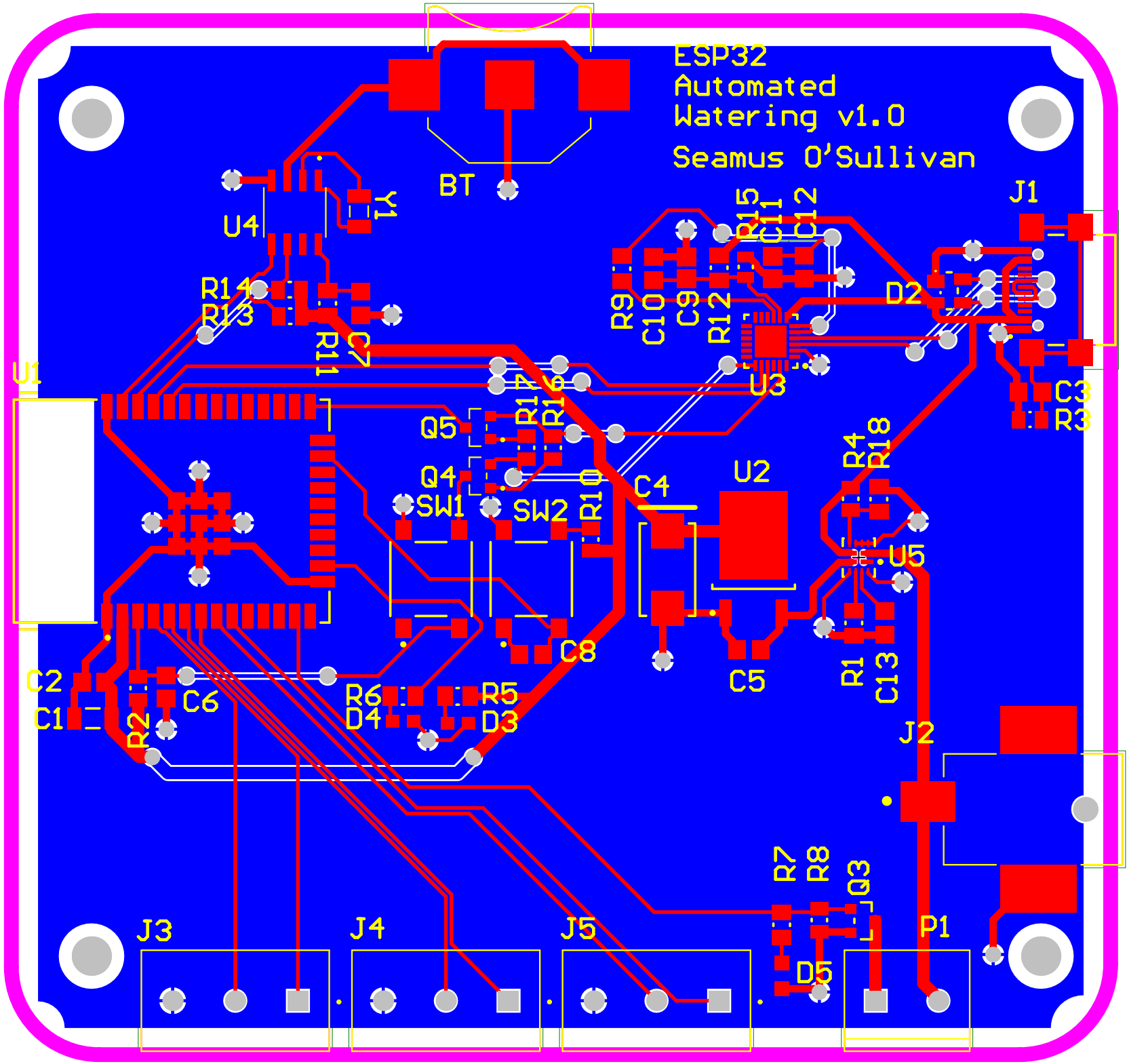
ESP32
Automated
Watering v1.0
Seamus O'Sullivan
BT
U4
Y1
R14
R13
R11
C7
U1
R15
C11
C12
R9
C10
C9
R12
U3
J1
D2
C3
R3
Q5
Q4
R10
R1
SW1
SW2
C4
U2
R4
R18
U5
C8
C5
R1
C13
C2
C1
R2
C6
R6
D4
R5
D3
J2
R7
R8
Q3
D5
P1
J3
J4
J5