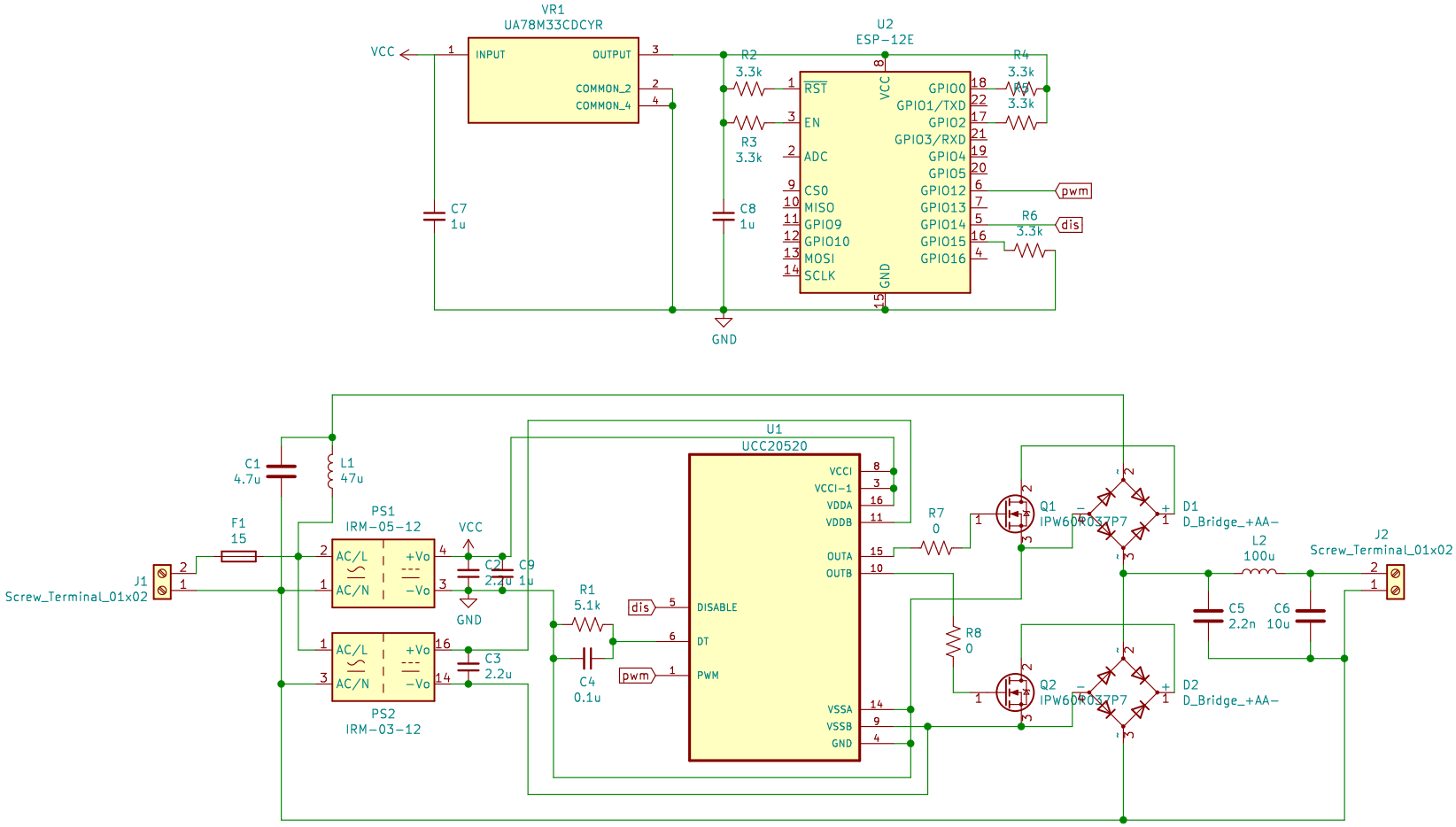

Sean Olson

Sheet: /

File: Sine_Dimmer.sch

Title: Sine Dimmer

Size: A4	Date: 2020-12-01	**Rev: 1.0**
KiCad E.D.A. kicad (5.1.7)-1		Id: 1/1