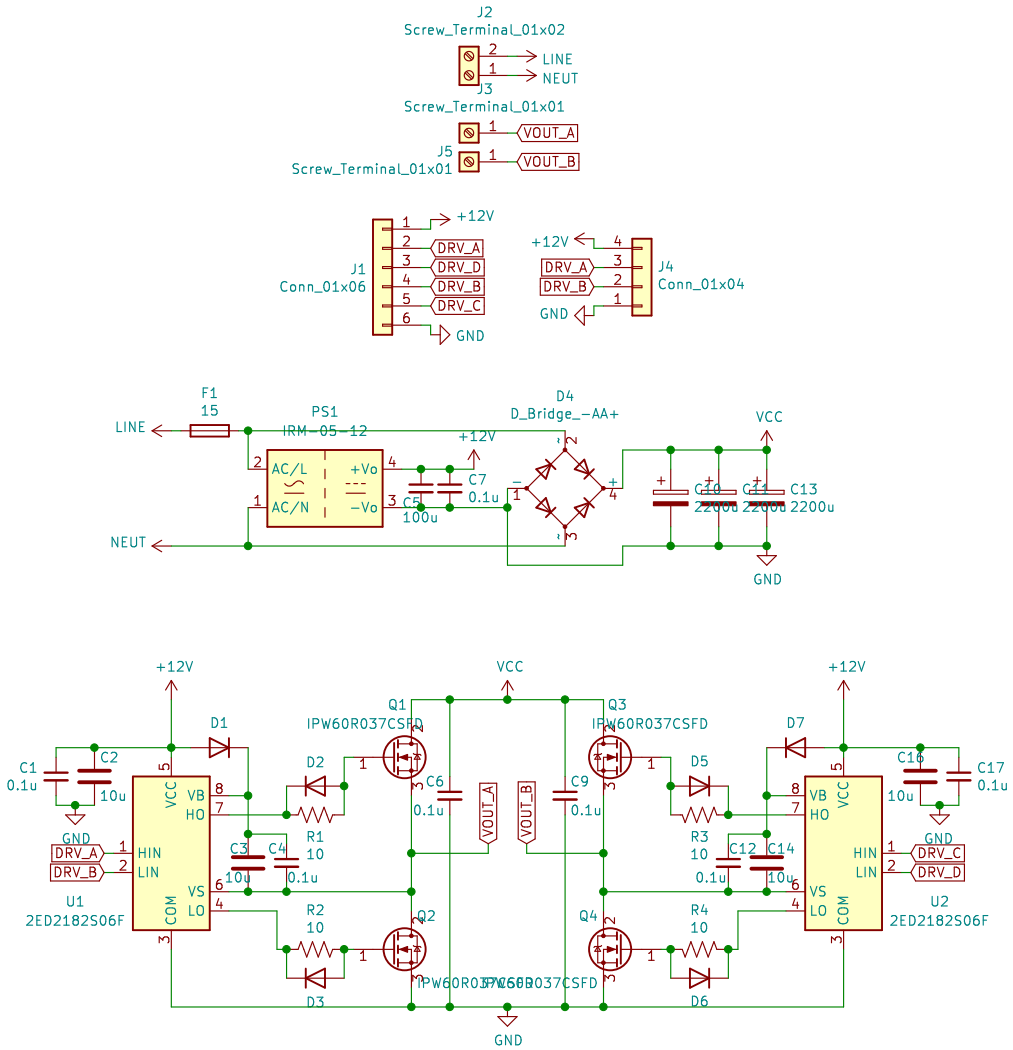

Sean Olson

Sheet: /
File: VFD.sch

Title: VFD

Size: A4	Date: 2021-02-10	**Rev: 1.0**
KiCad E.D.A. kicad (5.1.9)-1		Id: 1/1