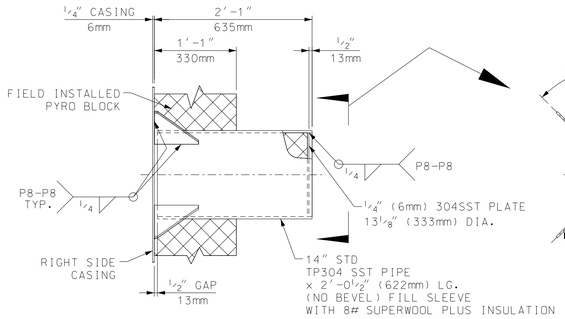

14" EXPANSION END BAFFLE SUPPORT
RIGHT SIDE (1) PLACE

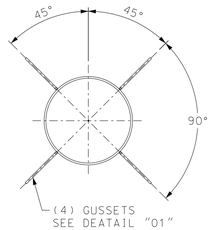

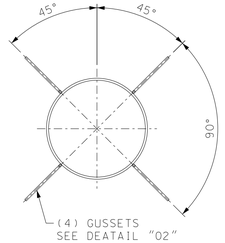

SECTION G 0015

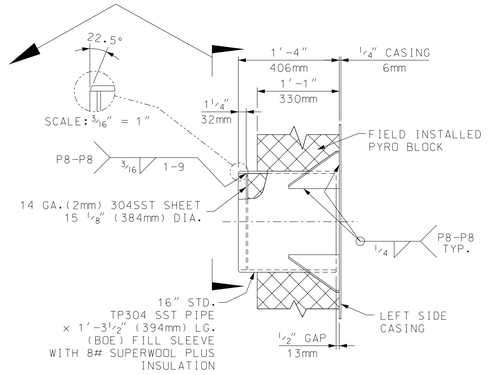

16" FIXED END BAFFLE SUPPORT
LEFT SIDE (1) PLACE

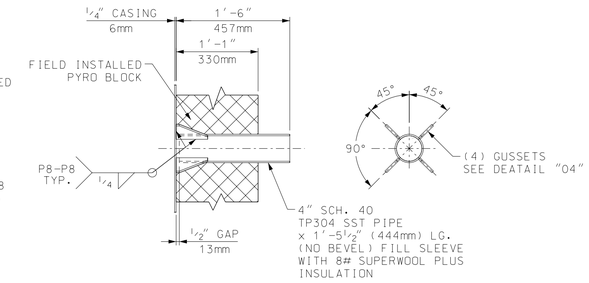

SECTION K 0015
4" EXPANSION END ELEMENT SUPPORT
RIGHT SIDE (7) PLACES

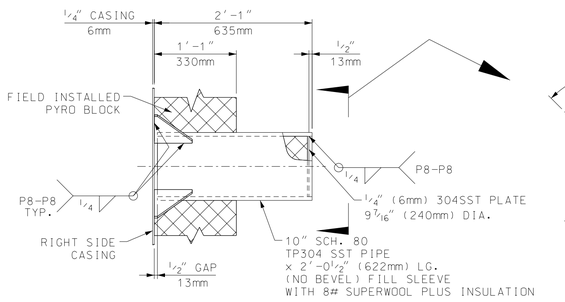

10" EXPANSION END BAFFLE SUPPORT
RIGHT SIDE (7) PLACES

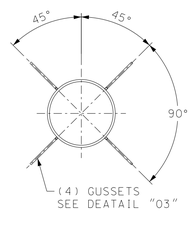

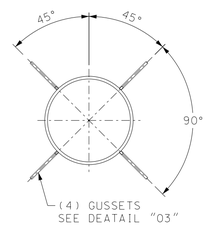

SECTION H 0015

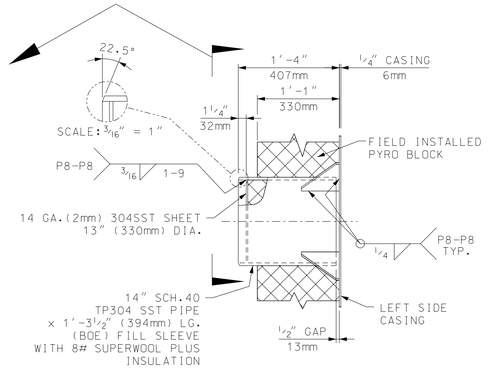

14" FIXED END BAFFLE SUPPORT
LEFT SIDE (7) PLACES

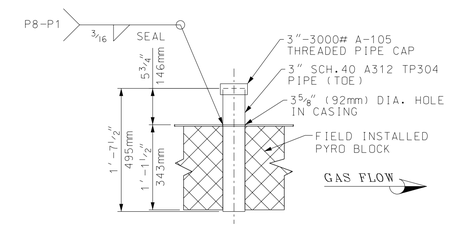

SECTION M 0015
SKYCLIMBER PORT
(8) PLACES

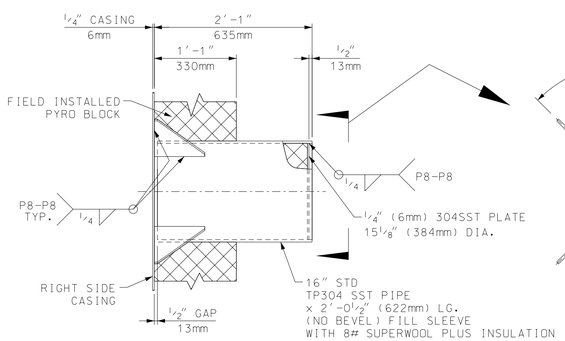

16" EXPANSION END BAFFLE SUPPORT
RIGHT SIDE (6) PLACES

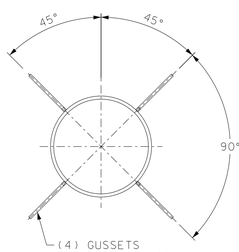

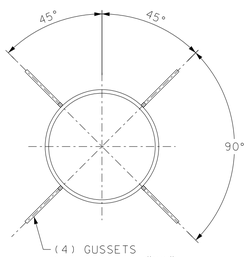

SECTION J 0015

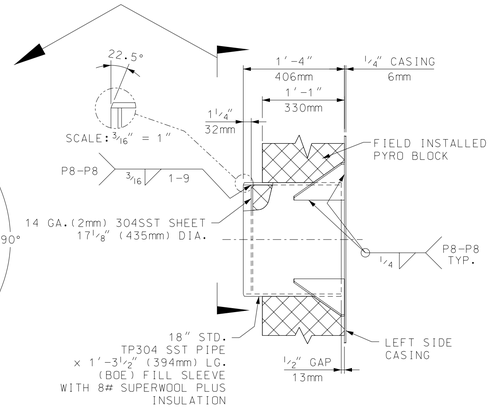

18" FIXED END BAFFLE SUPPORT
LEFT SIDE (6) PLACES

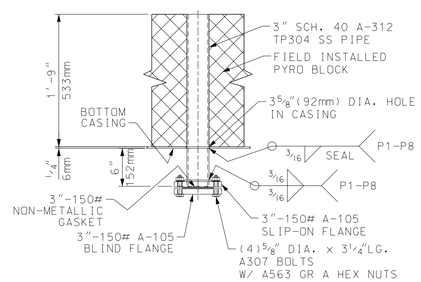

SECTION N 0015
DRAIN PORT

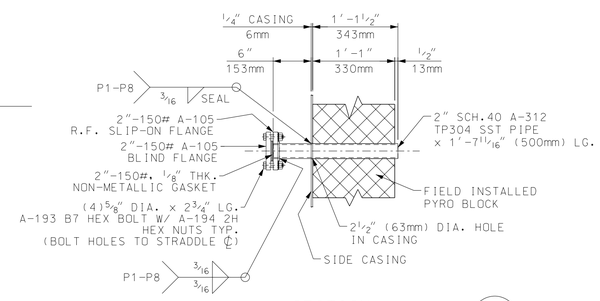

SECTION L 0015
2"-150# RF FLG., GAS PATH TEST PORT
RIGHT SIDE (8) PLACES
LEFT SIDE (8) PLACES

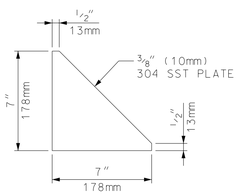

GUSSET DETAIL "01"
SCALE: 3/16" = 1"

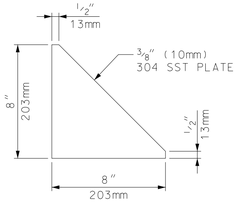

GUSSET DETAIL "02"
SCALE: 3/16" = 1"

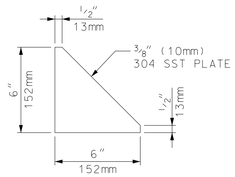

GUSSET DETAIL "03"
SCALE: 3/16" = 1"

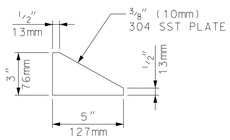

GUSSET DETAIL "04"
SCALE: 3/16" = 1"

NOTE:

1. SEE DRAWING V17494-DWND-0015 FOR GENERAL NOTES AND MATERIAL REQUIREMENTS.

REFERENCE DRAWINGS:

V17494-DWND-0015 - BURNER DUCT ASSEMBLY
V17494-DWND-0016 THRU 0018 - BURNER DUCT SECTION & DETAILS

Rev.	Description	Date	Drawn	Chkd. 1	Chkd. 2	Appr.
00	FIRST ISSUE	13-JAN-16	MS	TDO		FRY

Revisions

This drawing contains Vogt Power International's confidential and proprietary information and cannot be used, duplicated or disclosed in whole or in part, except with the express written permission of Vogt Power International. EXCEPT AS EXPRESSLY STATED IN ANY WRITTEN CONTRACT - ALL WARRANTIES RELATING TO THIS DRAWING, INCLUDING THE WARRANTIES OF MERCHANTABILITY AND FITNESS, ARE DISCLAIMED.
©Vogt Power International, Inc. all rights reserved as an unpublished work.

MIDDLETOWN ENERGY CENTER
and
KINGS MOUNTAIN ENERGY CENTER
for
NTE ENERGY and GEMMA POWER SYSTEMS
VOGT POWER PROJECTS V17494 & V17495

3rd ANGLE PROJECTION

Scale: 1"= 1'-0"

Title
BURNER DUCT SECTION & DETAILS

Vogt Power International
13551 Triton Park Blvd
Suite 2000
Louisville, Ky. 40223 USA
www.VogtPower.com

Internal Drawing Status	Size	Drawing No.	Rev.
FOR RECORD	D	V17494-DWND-0019	00