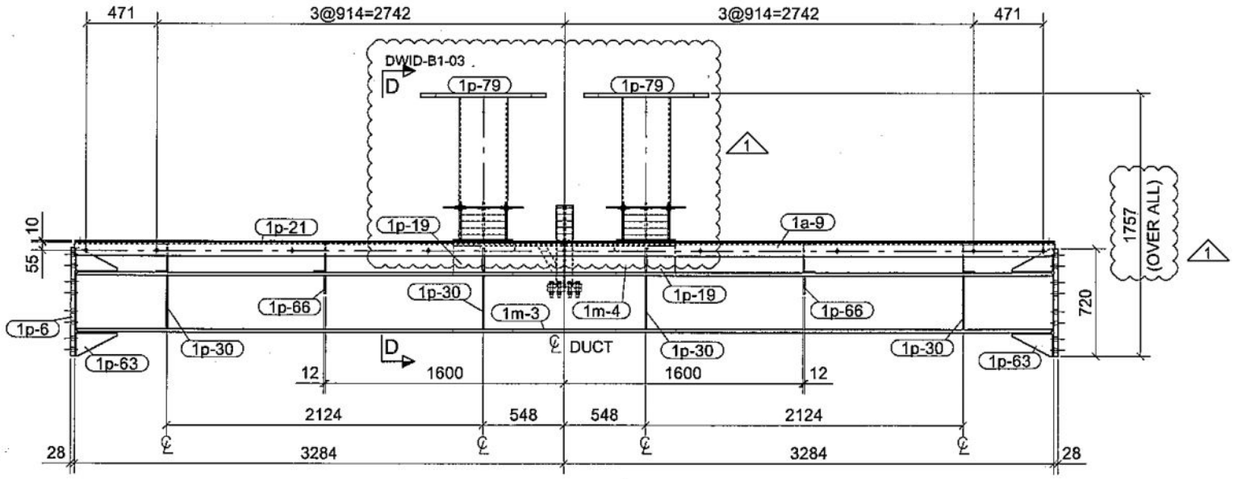

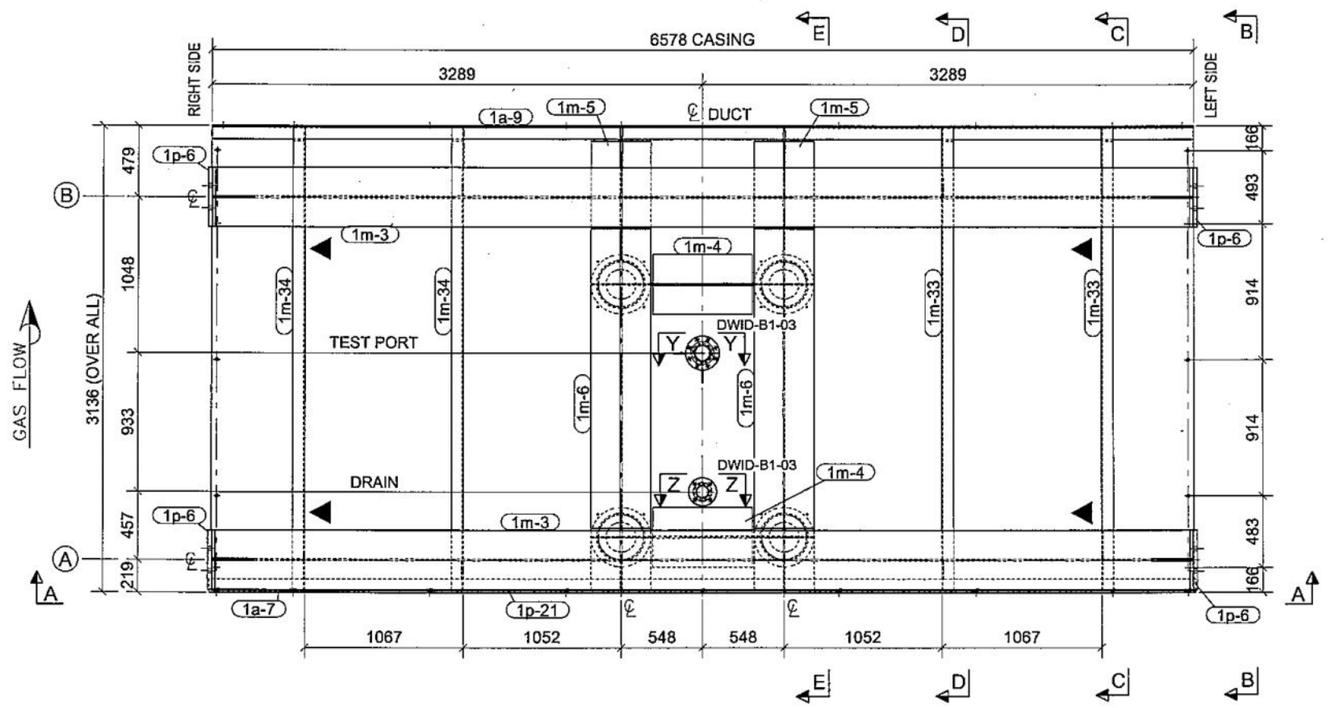

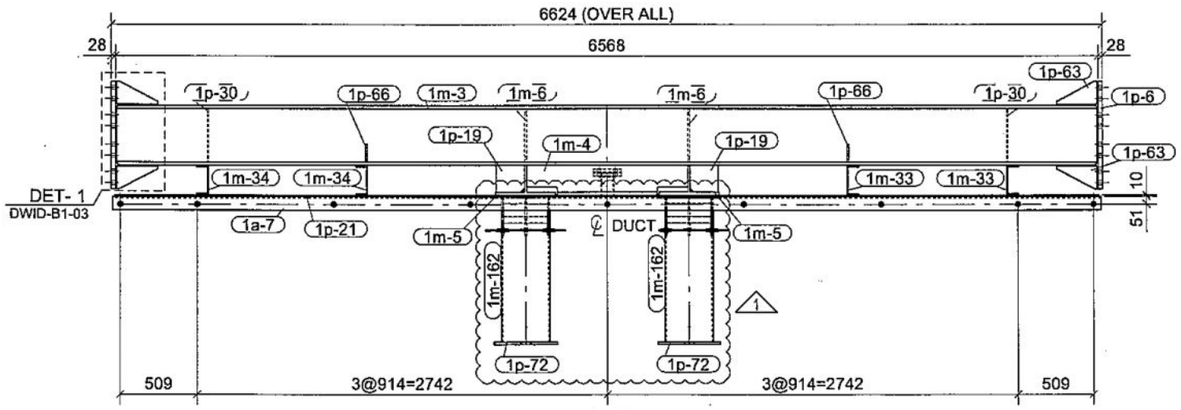

A - A

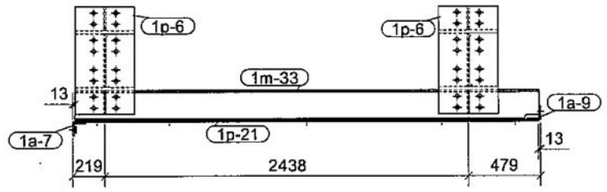

B - B

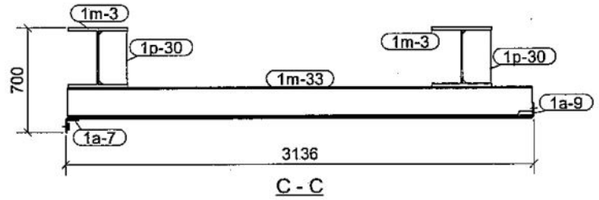

C - C

PLACE STIFF. PLATE
AT LOCATION MARKED BY ▲

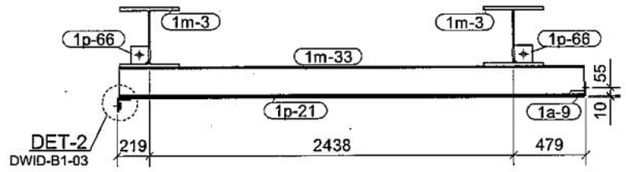

D - D

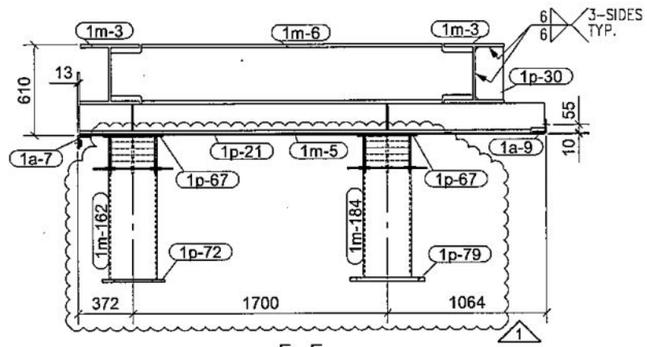

E - E

VOGT POWER INTERNATIONAL	
Released, Work May Proceed	
Bell, Milton	Mar-30-2016

VOGT POWER INTERNATIONAL
V17494-DWXD-7001-01
10-Mar-2016

This drawing contains Visavakit Patana Corp., Ltd.'s confidential and proprietary information and cannot be used, duplicated or disclosed in whole or in part, except with the express written permission of Visavakit Patana Corp., Ltd.
© Visavakit Patana Corp., Ltd. all rights reserved as an unpublished work.

VISAVAKIT PATANA CORPORATION LIMITED
OFFICE : 215/148-149 Prachard 1 Road , Bangkok 10800 Tel. : 0-2585-2556-8 Fax : 0-2587-6068
PLANT 1 : 28/2 Moo 4 , Soi Chai Uo , Pathumthani 12000 Tel.:0-2975-2811-4 Fax: 0-2975-2815
PLANT 2 : 52 Moo7 , Kubangluang , Ladlumkaew , Pathumthani 12140 Tel.:0-2979-4001-9 Fax: 0-2979-4010
www.vipco-thai.com Email : vipco@vipco-thai.com

TITLE
VOGT POWER INTERNATIONAL
MIDDLETOWN ENERGY CENTER PROJECT
INLET DUCT
BOTTOM PANEL

ISO-A (Std)
JOB NO. 1711

REV.	DATE.	DESCRIPTION	DRAWN	CHKD.	APPROD.
1	19/11/15	ADD SUPPORT REF. DWG.(V17494-DWND-0011_REV.0)	W.Tawatchai		
0	02/11/15	FIRST ISSUE	W.Tawatchai		

REF.DWG.NO. Y15-1711-E0101~E0104
VIPCO DWG.NO. Y15-1711- DWID-B1-02
REV 1