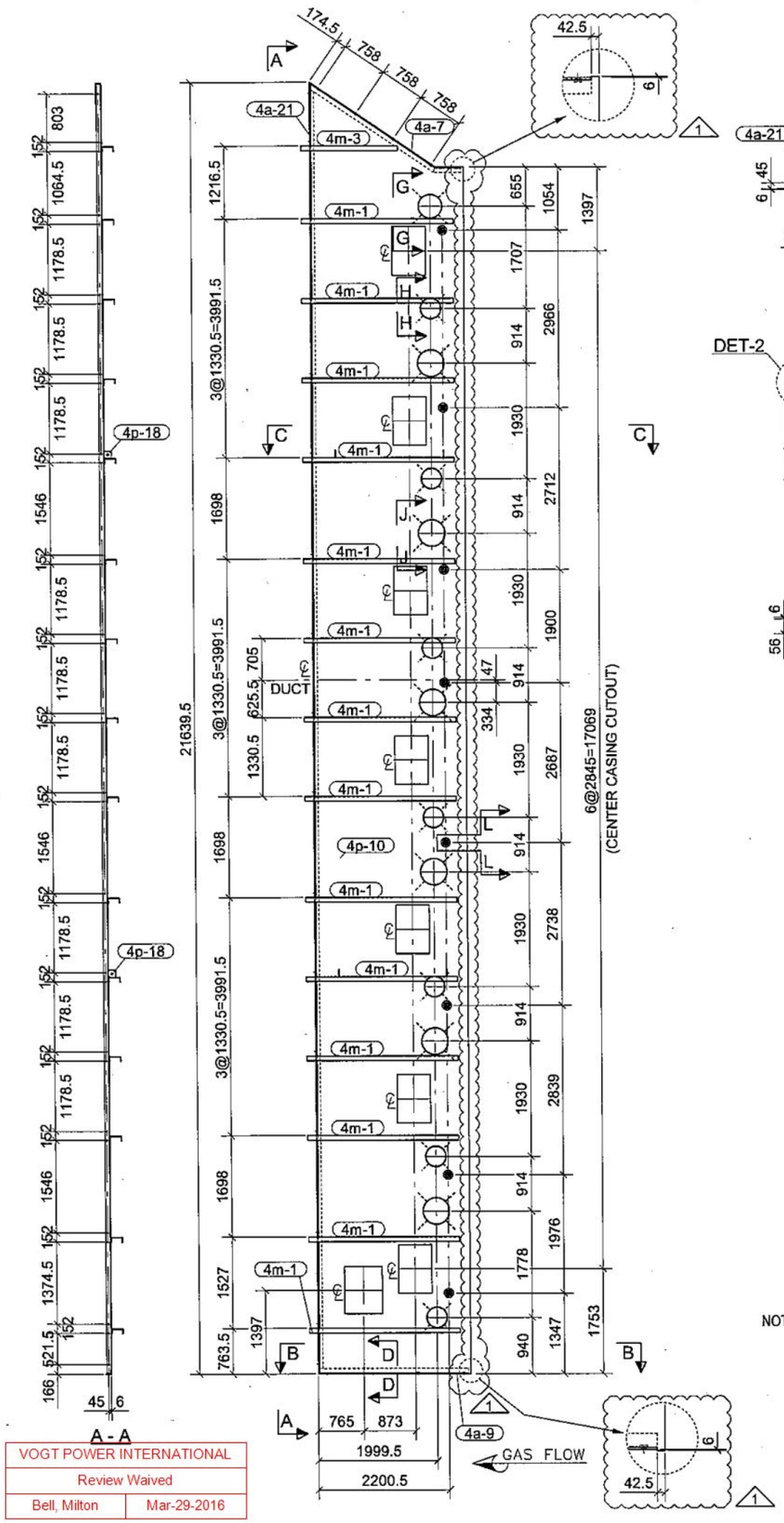

A - A

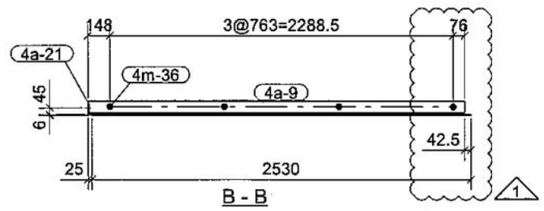

B - B

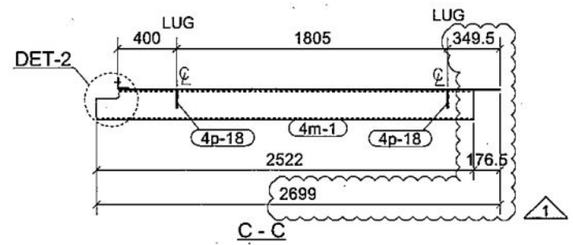

C - C

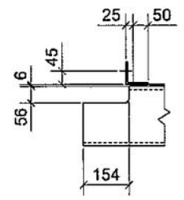

DETAIL-2

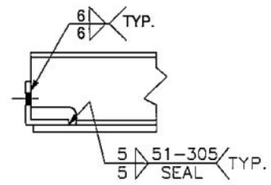

TYP. FIELD JOINT

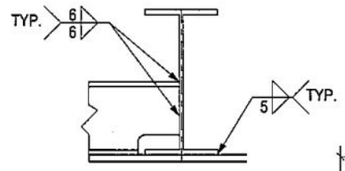

TYP. COPE DETAIL

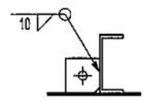

TYP.LIFTING LUG

NOTE : THIS STIFFENER IS USE FOR SHOP HANDLING PURPOSED ONLY

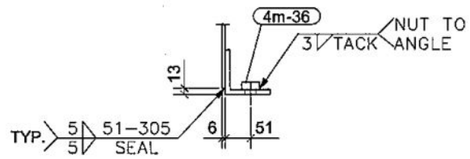

D - D

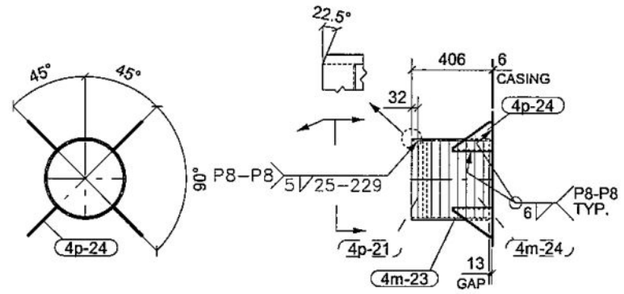

G - G

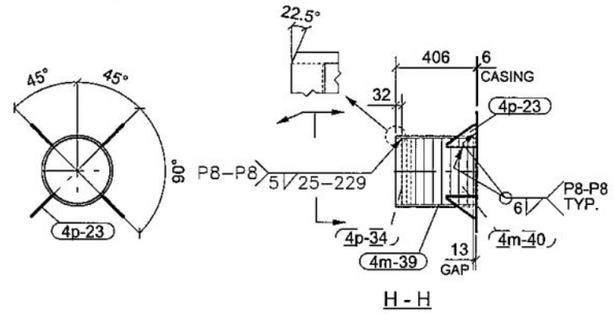

H - H

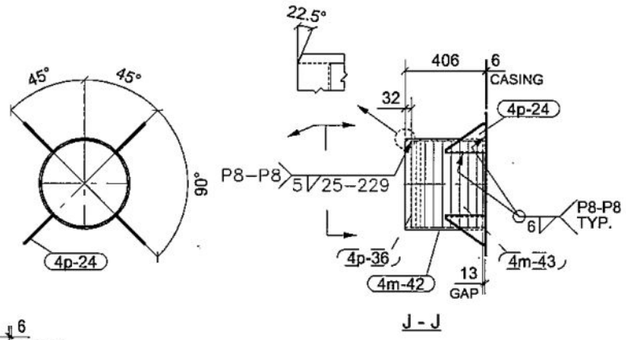

J - J

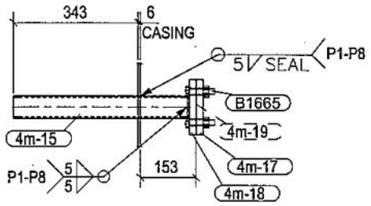

L - L

VOGT POWER INTERNATIONAL
V17494-DWXD-7448-01
21-Mar-2016

REV.	DATE.	DESCRIPTION	DRAWN	CHKD.	APPROD.
1	24/02/16	CANCEL PART No. 4a-18 PER (TQ. No.V17494-RFI-0070)	W.Tawatchai		
0	08/02/16	FIRST ISSUE	W.Tawatchai		

This drawing contains Visavakit Patana Corp., Ltd.'s confidential and proprietary information and cannot be used, duplicated or disclosed in whole or in part, except with the express written permission of Visavakit Patana Corp., Ltd.

© Visavakit Patana Corp., Ltd. all rights reserved as an unpublished work.

VISAVAKIT PATANA CORPORATION LIMITED
OFFICE : 215/148-149 Prachard 1 Road , Bangkok 10800 Tel. : 0-2585-2558-8 Fax : 0-2587-6068
PLANT 1 : 28/2 Moo 4 , Soi Chai Uo , Pathumthani 12000 Tel.:0-2975-2811-4 Fax: 0-2975-2815
PLANT 2 : 52 Moo7 , Kubangluang , Ladlumkaew , Pathumthani 12140 Tel.:0-2979-4001-9 Fax: 0-2979-4010
www.vipco-thai.com Email : vipco@vipco-thai.com

TITLE

VOGT POWER INTERNATIONAL
MIDDLETOWN ENERGY CENTER PROJECT
BURNER DUCT (CASING)
LEFT SIDE PANEL

ISO-A (3rd)

JOB NO. 1711

REF.DWG.NO. Y15-1711-E0301~E0302

VIPCO DWG.NO. Y15-1711- DWBU-L1-02

REV 1

VOGT POWER INTERNATIONAL
Review Waived
Bell, Milton | Mar-29-2016