MEC
Ductwork-Erection : CO-SCR Field liner & coner liner

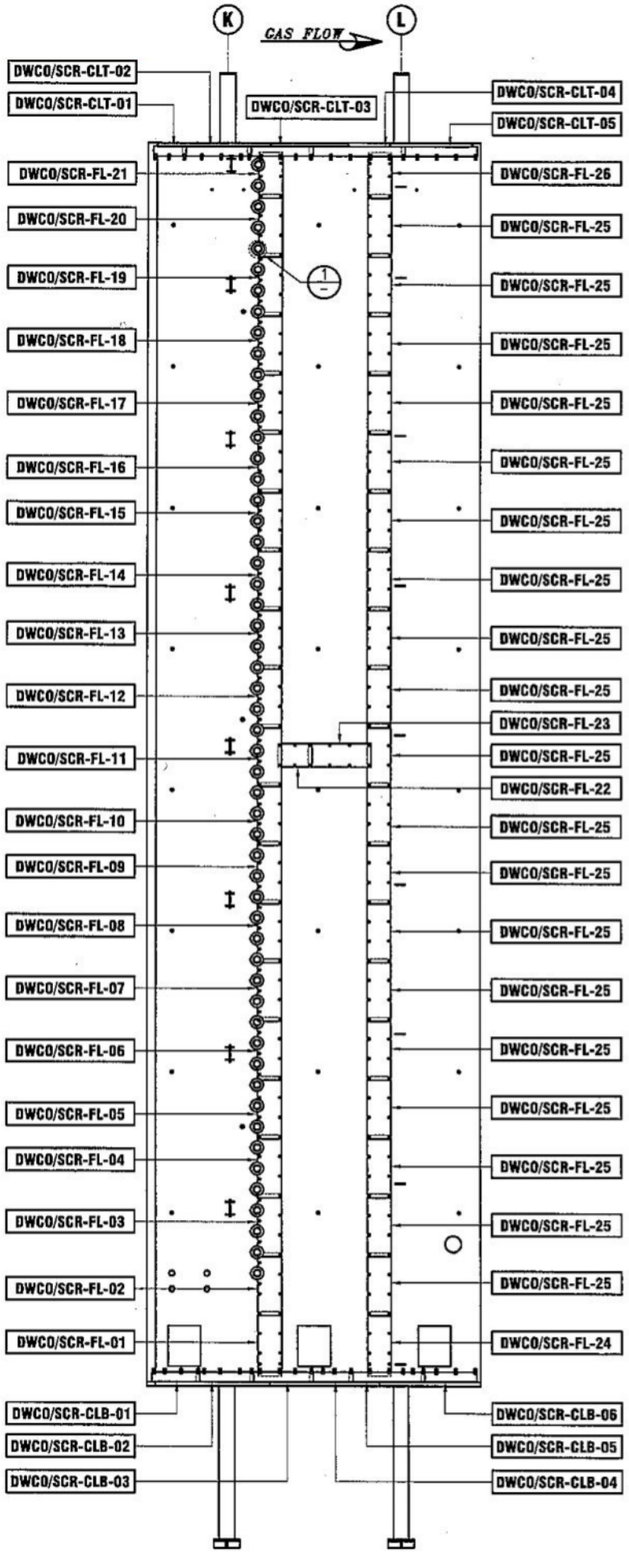

LEFT SIDE PANEL
(LOOKING LINER VIEW)

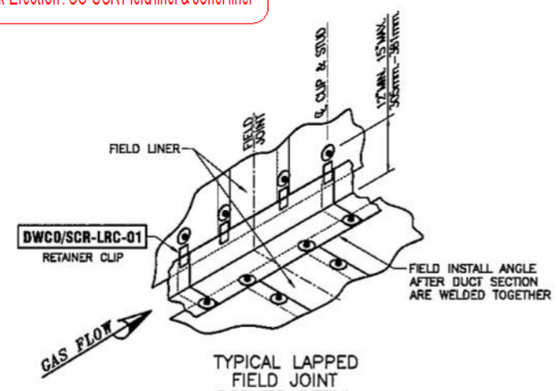

TYPICAL LAPPED FIELD JOINT CORNER DETAIL
ISOMETRIC VIEW

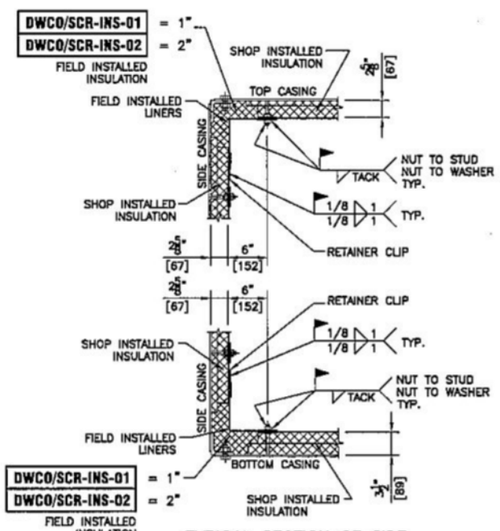

TYPICAL SECTION OF SIDE, TOP, & BOTTOM LINER PANELS AT THE CORNERS

NOTE: SUBSTITUTE STUD FOR RETAINER CLIPS IN CRITICAL AREAS USING CHANNEL BARS. SEE "ALTERNATIVE LAPPED FIELD JOINT CORNER DETAIL".

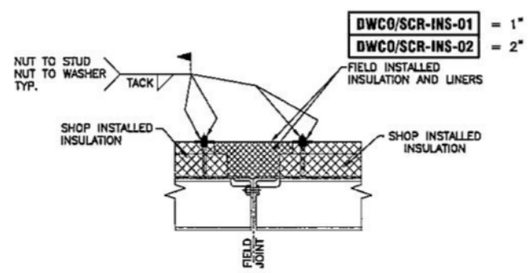

TYP. FIELD JOINT @ OFFSET
SIDE SHOWN

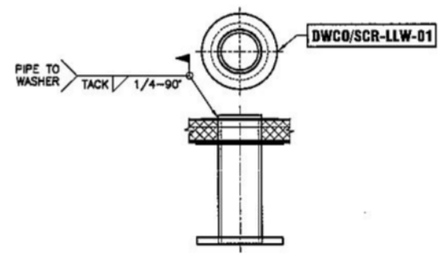

DETAIL 1
(54) PLACES

NO	PART NO.	Q'TY	DESCRIPTION	REMARK
1	V17494-DWC0/SCR-CLT-01	1	CORNER LINER LEFT TOP	
2	V17494-DWC0/SCR-CLT-02	1	CORNER LINER LEFT TOP	
3	V17494-DWC0/SCR-CLT-03	1	CORNER LINER LEFT TOP	
4	V17494-DWC0/SCR-CLT-04	1	CORNER LINER LEFT TOP	
5	V17494-DWC0/SCR-CLT-05	1	CORNER LINER LEFT TOP	
6	V17494-DWC0/SCR-CLB-01	1	CORNER LINER LEFT BOTTOM	
7	V17494-DWC0/SCR-CLB-02	1	CORNER LINER LEFT BOTTOM	
8	V17494-DWC0/SCR-CLB-03	1	CORNER LINER LEFT BOTTOM	
9	V17494-DWC0/SCR-CLB-04	1	CORNER LINER LEFT BOTTOM	
10	V17494-DWC0/SCR-CLB-05	1	CORNER LINER LEFT BOTTOM	
11	V17494-DWC0/SCR-CLB-06	1	CORNER LINER LEFT BOTTOM	
12	V17494-DWC0/SCR-FL-01	1	FIELD LINER LEFT SIDE	
13	V17494-DWC0/SCR-FL-02	1	FIELD LINER LEFT SIDE	
14	V17494-DWC0/SCR-FL-03	1	FIELD LINER LEFT SIDE	
15	V17494-DWC0/SCR-FL-04	1	FIELD LINER LEFT SIDE	
16	V17494-DWC0/SCR-FL-05	1	FIELD LINER LEFT SIDE	
17	V17494-DWC0/SCR-FL-06	1	FIELD LINER LEFT SIDE	
18	V17494-DWC0/SCR-FL-07	1	FIELD LINER LEFT SIDE	
19	V17494-DWC0/SCR-FL-08	1	FIELD LINER LEFT SIDE	
20	V17494-DWC0/SCR-FL-09	1	FIELD LINER LEFT SIDE	
21	V17494-DWC0/SCR-FL-10	1	FIELD LINER LEFT SIDE	
22	V17494-DWC0/SCR-FL-11	1	FIELD LINER LEFT SIDE	
23	V17494-DWC0/SCR-FL-12	1	FIELD LINER LEFT SIDE	
24	V17494-DWC0/SCR-FL-13	1	FIELD LINER LEFT SIDE	
25	V17494-DWC0/SCR-FL-14	1	FIELD LINER LEFT SIDE	
26	V17494-DWC0/SCR-FL-15	1	FIELD LINER LEFT SIDE	
27	V17494-DWC0/SCR-FL-16	1	FIELD LINER LEFT SIDE	
28	V17494-DWC0/SCR-FL-17	1	FIELD LINER LEFT SIDE	
29	V17494-DWC0/SCR-FL-18	1	FIELD LINER LEFT SIDE	
30	V17494-DWC0/SCR-FL-19	1	FIELD LINER LEFT SIDE	
31	V17494-DWC0/SCR-FL-20	1	FIELD LINER LEFT SIDE	
32	V17494-DWC0/SCR-FL-21	1	FIELD LINER LEFT SIDE	
33	V17494-DWC0/SCR-FL-22	1	FIELD LINER LEFT SIDE	
34	V17494-DWC0/SCR-FL-23	1	FIELD LINER LEFT SIDE	
35	V17494-DWC0/SCR-FL-24	1	FIELD LINER LEFT SIDE	
36	V17494-DWC0/SCR-FL-25	19	FIELD LINER LEFT SIDE	
37	V17494-DWC0/SCR-FL-26	1	FIELD LINER LEFT SIDE	
38	V17494-DWC0/SCR-LRC-01	43	LEFT SIDE RETAINER CLIP	
39	V17494-DWC0/SCR-LLW-01	54	LINER LEFT WASHER	

VOGT POWER INTERNATIONAL
Released, Work May Proceed
Bell, Milton | Mar-30-2016

VOGT POWER INTERNATIONAL
V17494-DWXD-5016-00
24-Mar-2016

☒ UNIT 1

Project Owner's : Gemma Power System,LLC
Project Name : Middletown Energy Center Project
Vogt Power International Job No./Cost symbol: V17494/ DW
Vogt Power International Doc. No. :
Vogt Power International P.O. No. : V0009490

This drawing contains Visavakit Patana Corp., Ltd.'s confidential and proprietary information and cannot be used, duplicated or disclosed in whole or in part, except with the express written permission of Visavakit Patana Corp., ltd.
© Visavakit Patana Corp., Ltd. all rights reserved as an unpublished work.

VISAVAKIT PATANA CORPORATION LIMITED
OFFICE 213/140-148 Prachaniwat 1 Road, Bangkok, Bangkok 10600 Tel: 0-2255-2256-8 Fax: 0-2252-6285
PLANT 1 :26/2 Moo4, Sai Chai Ua, Pathumthani 12000 Tel: 0-2975-2811-4 Fax: 0-2975-2815
PLANT 2 :52 Moo7, Nakonphang, Lahsalaiwan, Pathumthani 12140 Tel: 0-2979-4891-6 Fax: 0-2979-4890
www.vipco-thai.com Email : vipco@vipco-thai.com

TITLE
VOGT POWER INTERNATIONAL
MIDDLETOWN ENERGY CENTER PROJECT
ERECTION DRAWING
CO/SCR FIELD LINER & CORNER LINER

ISO-A
JOB NO. 1711

REV.	DATE	DESCRIPTION	DRAWN.	CHKD.	APRVD.	REF.DWG.NO.	VIPCO DWG.NO.	REV
A	01/03/16	FIRST ISSUE	SJ/OSN	chatchai		V17494-DWND-0025~0031	Y15-1711-E0205	0

A1

PLOTTING DATE & TIME 04 Mar 2016 - 5:50pm | FILE LOCATION Acad-X:\1711_VPI 17494_KPP_Middle Town\Erection dwg\Y15-1711-E0205 Rev.0.dwg