MATERIAL LIST FOR ASSEMBLY MK'D		DWCO/SCR-02-1		Q'TY :	5	No. Required	
Part No.	Description	Width	Length	Q'ty	Material	Weight	Area
2m-57	PIPE 6" SCH.XXS (OD.168.3 X 21.95 THK.)		92	5	A-53 Gr.B	31.08	0.30
2p-42	PL-25	254	254	10	G3101 SS400	126.61	1.54
2m-52	INSULATION, 2" THK, 8# DENSITY		OD.125	15	SUPERWOOL PLUS	0.05	0.59
					Total	157.74	2.44

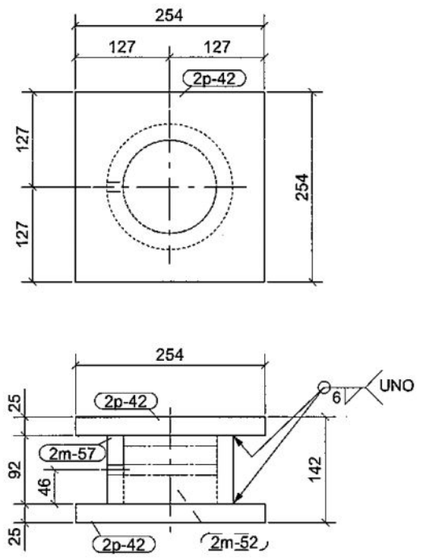

VOGT POWER INTERNATIONAL
V17494-DWXD-7460-00
25-Feb-2016

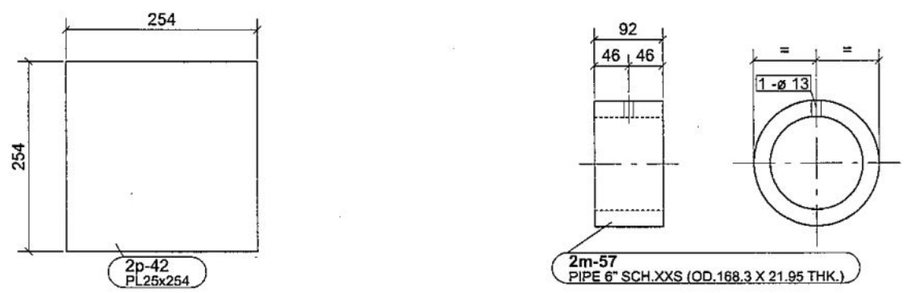

VOGT POWER INTERNATIONAL
Released, Work May Proceed
Bell, Milton | Mar-30-2016

☒ UNIT 1

Project Owner's : Gemma Power System,LLC
Project Name: Middletown Energy Center Project
Vogt Power International Job No./Cost symbol: V17494 / DW
Vogt Power International Doc. No. :.....
Vogt Power International P.O. No.V0009490

This drawing contains Visavakit Patana Corp., Ltd.'s confidential and proprietary information and cannot be used, duplicated or disclosed in whole or in part, except with the express written permission of Visavakit Patana Corp., Ltd.
© Visavakit Patana Corp., Ltd. all rights reserved as an unpublished work.

VISAVAKIT PATANA CORPORATION LIMITED
OFFICE : 215/148-149 Prachard 1 Road , Bangkok 10800 Tel. : 0-2585-2556-8 Fax : 0-2587-5068
PLANT 1 : 28/2 Moo 4 , Soi Chai Uo , Pathumthani 12000 Tel.:0-2975-2811-4 Fax: 0-2975-2815
PLANT 2 : 52 Moo7 , Kubangluang , Ladlumkaew , Pathumthani 12140 Tel.:0-2979-4001-9 Fax: 0-2979-4010
www.vipco-thai.com Email : vipco@vipco-thai.com

TITLE
VOGT POWER INTERNATIONAL
MIDDLETOWN ENERGY CENTER PROJECT
CO / SCR DUCT (CASING)
BOTTOM SUPPORT

ISO-A (3rd)
JOB NO. 1711

Q'ty 5 PC(s) REQUIRED MARKED DWCO/SCR-02

REV.	DATE.	DESCRIPTION	DRAWN	CHKD.	APPROD.
0	23/02/20	FIRST ISSUE	S.Kitsana	Chatchai	

REF.DWG.NO. Y15-1711-E0201~E0203
VIPCO DWG.NO. Y15-1711- DWCO/SCR-02-1
REV 0