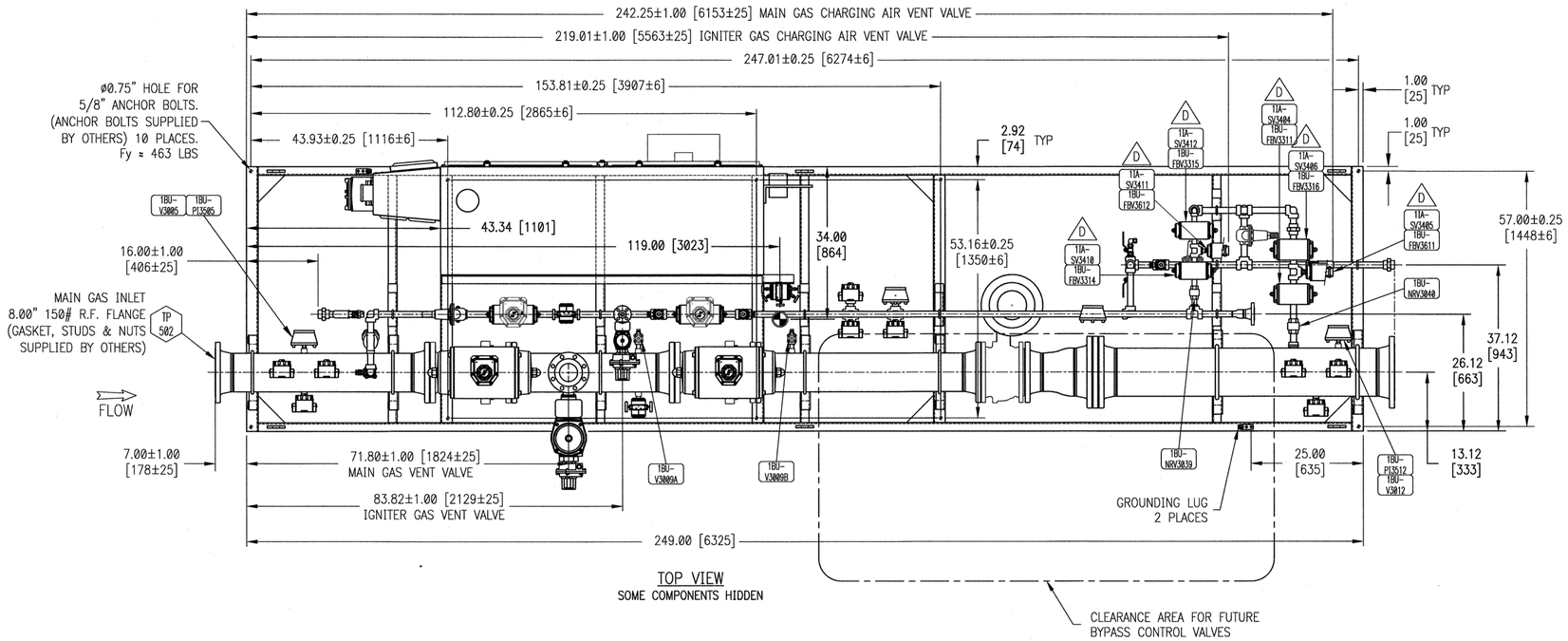

TOP VIEW
SOME COMPONENTS HIDDEN

NOTES:

1. ALL EXTERNAL, UNPAINTED CARBON STEEL SURFACES TO BE PREPARED PER SSPC-SP 6, PRIMED WITH 2-3 MILS DFT OF CARBOZINC 11 PER 394540-05, INTERMEDIATE COAT WITH 4-6 MILS DFT OF CARBOGUARD 893 PER 394540-41, AND FINISH PAINTED WITH 2-3 MILS DFT OF CARBOTHANE 134 PER 394540-37 IN CARBOLINE COLOR #2713 GRAY.
2. SEE FORNEY DOCUMENT B10238-000-01 FOR BILL OF MATERIAL. SEE FORNEY DRAWING B10238-005-01 FOR P&ID.
3. TOTAL WEIGHT OF FUEL SKID APPROXIMATELY 3700 lbs.
4. ALL VENTS AND DRAINS TO BE PIPED TO A NON-HAZARDOUS LOCATION (BY OTHERS).
5. ALL DIMENSIONS ARE ±0.50, EXCEPT WHERE NOTED. ALL DIMENSIONS ARE IN INCHES [MILLIMETERS]. DIMENSIONS IN PARENTHESES ARE FOR REFERENCE ONLY.
6. SEE DRAWING B10238-060-00 FOR BMS CABINET DETAILS. SEE FORNEY DRAWING B10238-070-00 FOR WIRING DIAGRAM.
7. DESIGNED, FABRICATED, AND INSPECTED IN ACCORDANCE WITH ASME B31.1. CARBON STEEL STRUCTURAL WELDS TO MEET AWS D1.1. STAINLESS STEEL STRUCTURAL WELDS TO MEET AWS D1.6.
8. FUEL SKID TO BE LOCATED IN CLASS I, DIVISION 2, GROUP D HAZARDOUS ELECTRICAL AREA.
9. EQUIPMENT FOR ONE DUCT BURNER UNITS WILL BE PROVIDED.
10. FUEL SKID TO BE LOCATED AS CLOSE TO BURNER AS POSSIBLE.
11. (⊕) DENOTES CENTER OF GRAVITY LOCATION ±6.00 [152MM].
12. BALLOONS WITH * DENOTES SHIPPED LOOSE ITEMS.

VOGT POWER INTERNATIONAL
V17494-BUXD-5002-03
20-Apr-2016

MEC/KMEC
Duct Burner-GA Fuel Skid

VOGT POWER INTERNATIONAL	
Released, Work May Proceed	
Bell, Milton	May-06-2016

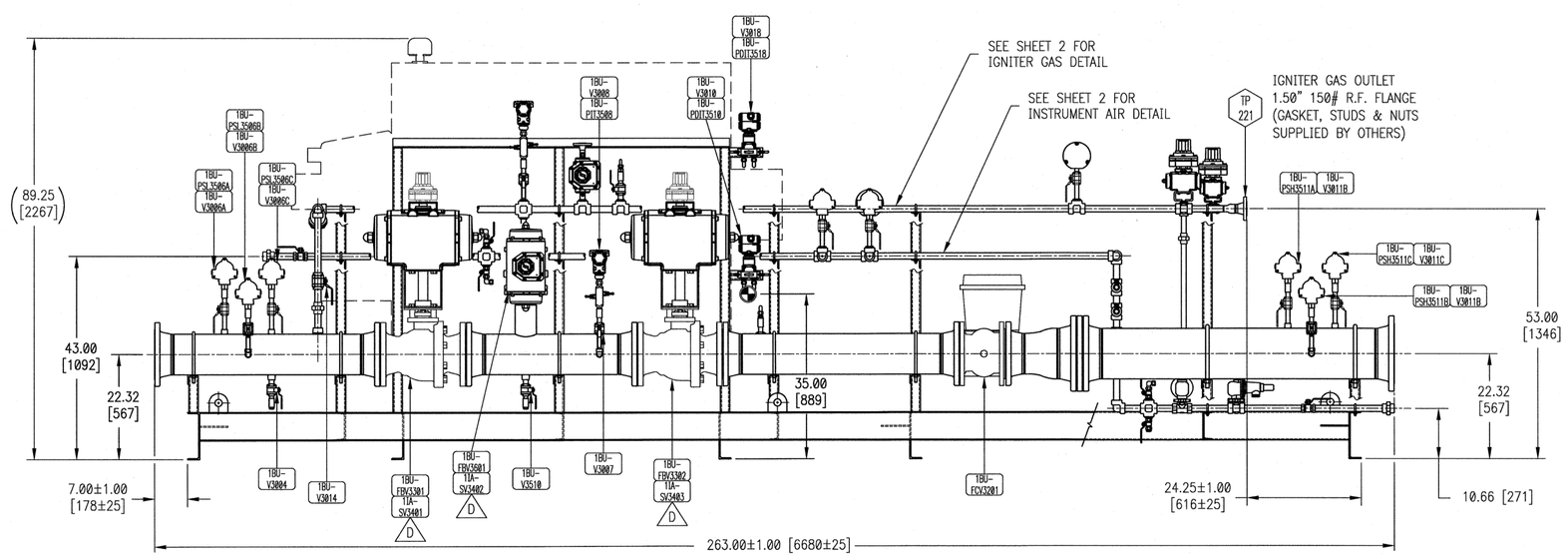

FRONT VIEW
SOME COMPONENTS HIDDEN

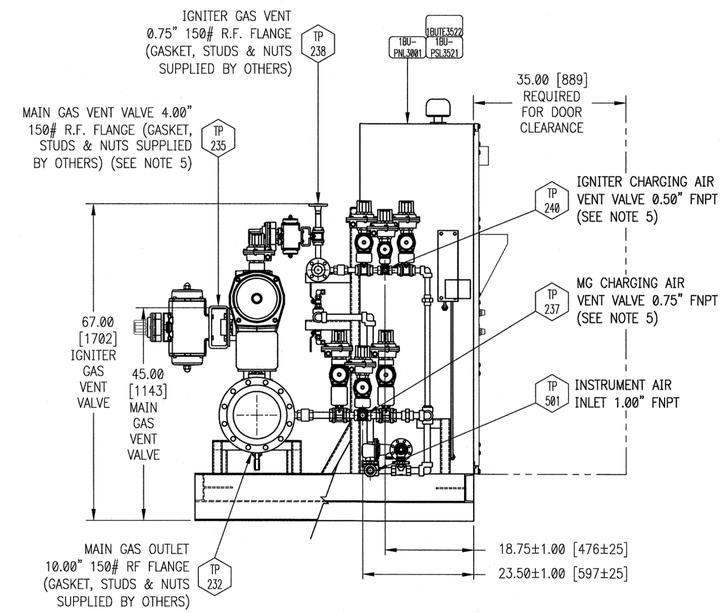

SIDE VIEW
SOME COMPONENTS HIDDEN

SKID TAG: 1BU-SKD2200

REV	DATE	DR	ENG	RVWD	DESCRIPTION
D	4/19/16		MK		REVISED PER CUSTOMER COMMENTS UPDATE SOLENOID TAGS
A	11/10/15	TP	MK	WM	INITIAL SUBMITTAL

MIDDLETOWN PROJECT
MIDDLETOWN, OH
VPI PROJECT #: V17494
VPI PO #: V0009467

KINGS MOUNTAIN PROJECT
KINGS MOUNTAIN, NC
VPI PROJECT #: V17495
VPI PO #: TBD

USE ENGINEERING STANDARD 348384-01 FOR TOLERANCES
ALL DIMENSIONS IN INCHES UNLESS OTHERWISE NOTED
DO NOT SCALE THIS DRAWING

CONFIDENTIAL – This drawing is the confidential and proprietary copyrighted property of Forney Corporation, 3405 Wiley Post Road, Carrollton, Texas USA 75006. All information contained herein is confidential and shall not be reproduced, copied, lent, or disclosed without the written permission of Forney Corporation.

TITLE
BURNER FUEL SKID
GENERAL ARRANGEMENT

FORNEY

Forney Corporation
Copyright © 1998 by Forney Corporation. All rights reserved.

APR 19 2016

CONTRACT	SCALE	SIZE	DRAWING NUMBER	REV
B10238	1:16 SHT 1 OF 2	D	B10238-030-01	D

FORM 600886-20, REV B

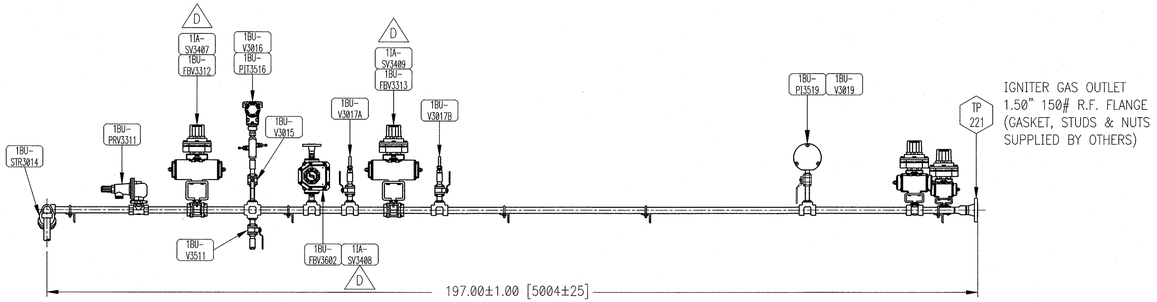

FRONT VIEW
IGNITER GAS ASSEMBLY

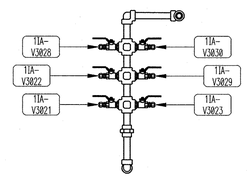

VIEW A-A
INSTRUMENT AIR ASSEMBLY

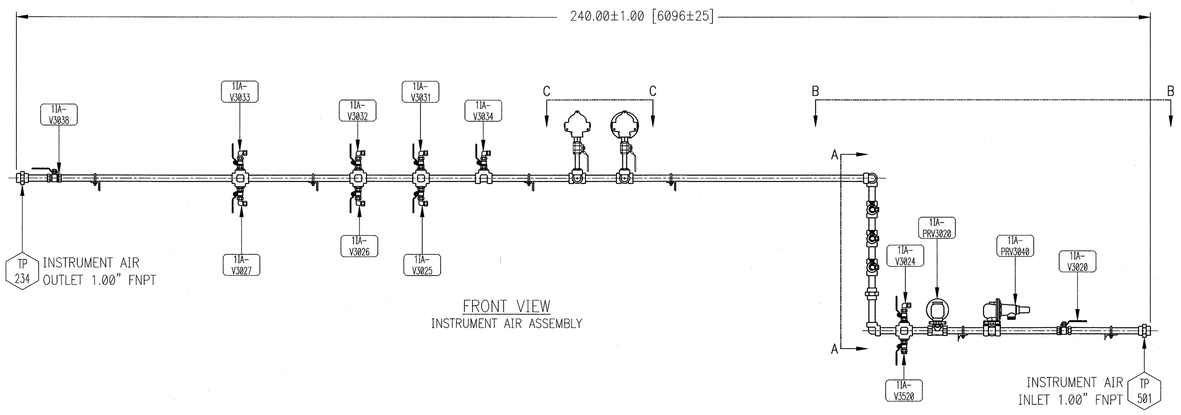

FRONT VIEW
INSTRUMENT AIR ASSEMBLY

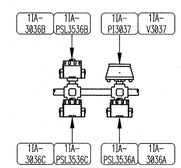

VIEW C-C
INSTRUMENT AIR ASSEMBLY

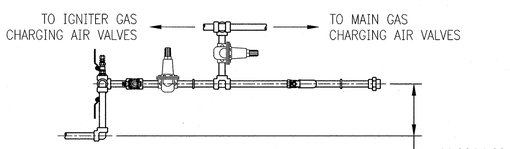

VIEW B-B
INSTRUMENT AIR ASSEMBLY

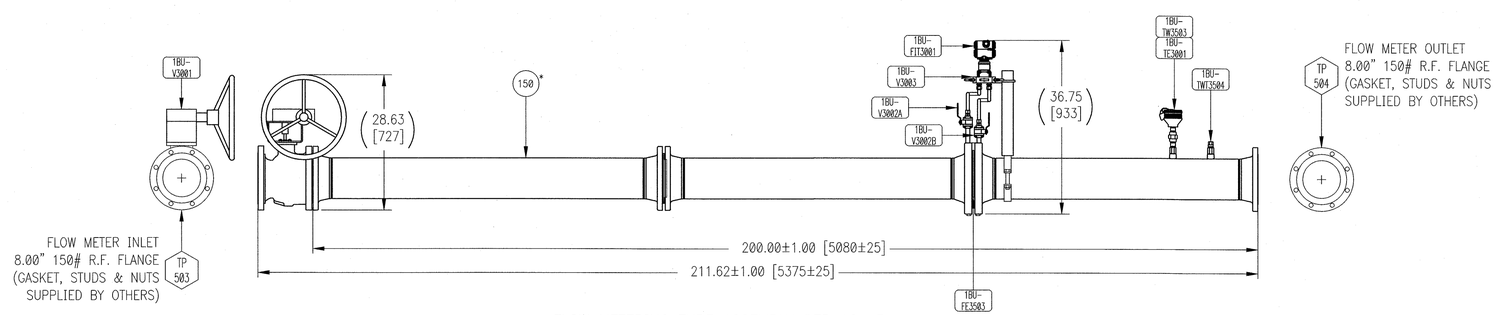

FLOW METERING TUBE ASSEMBLY PER AGA 3
SKID AND SUPPORTS BY OTHERS

REV	DATE	DR	ENG	RVWD	DESCRIPTION
D	4/19/16	[illegible]	MK	[illegible]	REVISED PER CUSTOMER COMMENTS UPDATE SOLENOID TAGS
A	11/10/15	TP	MK	WM	INITIAL SUBMITTAL

MIDDLETOWN PROJECT
MIDDLETOWN, OH
VPI PROJECT #: V17494
VPI PO #: V0009467

KINGS MOUNTAIN PROJECT
KINGS MOUNTAIN, NC
VPI PROJECT #: V17495
VPI PO #: TBD

USE ENGINEERING STANDARD 348384-01 FOR TOLERANCES
ALL DIMENSIONS IN INCHES UNLESS OTHERWISE NOTED
DO NOT SCALE THIS DRAWING

CONFIDENTIAL – This drawing is the confidential and proprietary copyrighted property of Forney Corporation, 3405 Wiley Post Road, Carrollton, Texas USA 75006. All information contained herein is confidential and shall not be reproduced, copied, lent, or disclosed without the written permission of Forney Corporation.

TITLE
BURNER FUEL SKID
GENERAL ARRANGEMENT

Forney Corporation
Copyright © 1998 by Forney Corporation. All rights reserved.

CONTRACT B10238
SCALE 1:16
SHT 2 OF 2
SIZE D
DRAWING NUMBER B10238-030-01
REV D

FORM 600086-20, REV B