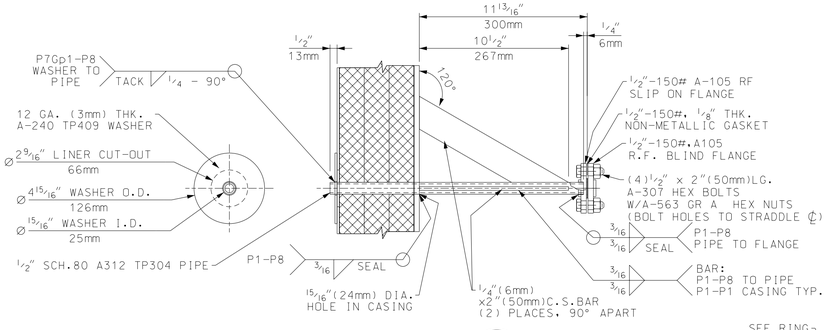

SECTION S 0001
1/2"-150# TEST PORT
(3) REQ'D FOR RIGHT SIDE
(3) REQ'D FOR LEFT SIDE
(6) TOTAL
SCALE: 3/16" = 1"

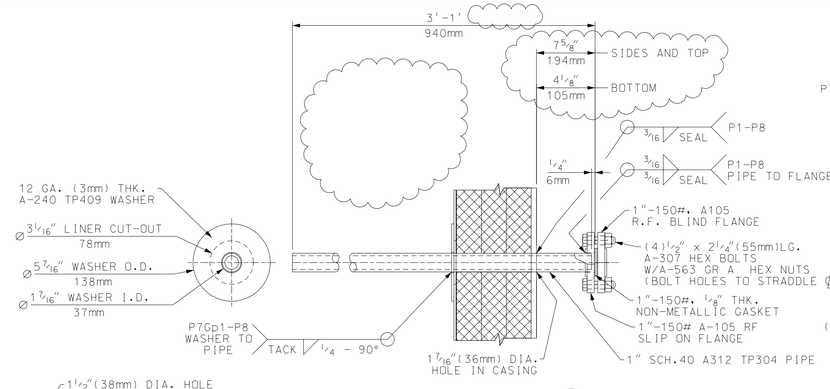

SECTION T 0001
1"-150# TEST PORT
(2) REQ'D FOR RIGHT SIDE.
(2) REQ'D FOR LEFT SIDE.
(2) REQ'D FOR TOP.
(2) REQ'D FOR BOTTOM
(8) TOTAL
SCALE: 3/16" = 1"

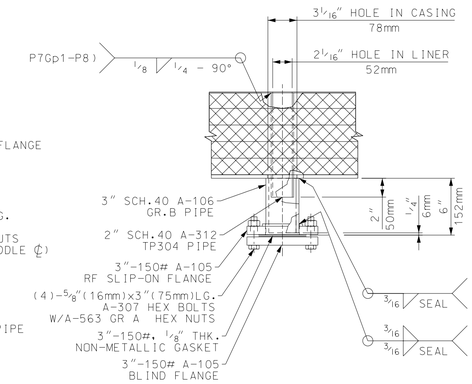

SECTION Z 0002
CASING DRAIN
SCALE: 1 1/2" = 1'-0"

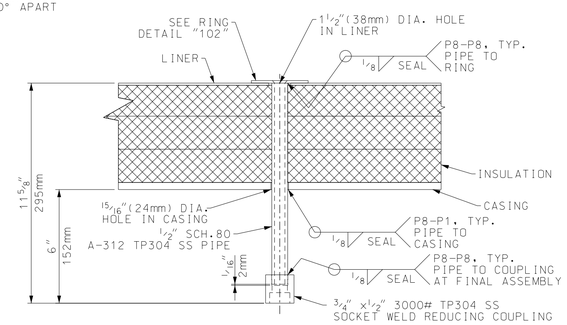

SECTION R 0001
3/4"-3000# GAS PATH PRESSURE PORT
(2) REQ'D FOR RIGHT SIDE
SCALE: 1/4" = 1"

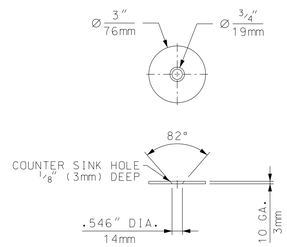

RING DETAIL 102 –
(2) PLACES
MAT'L.: A240 TP304 SS
SCALE : 1/4" = 1'-0"

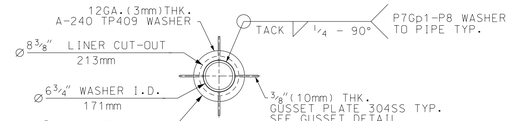

VIEW AA ----
TYP.WASHER VIEW
FOR 6" PIPE CONNECTION

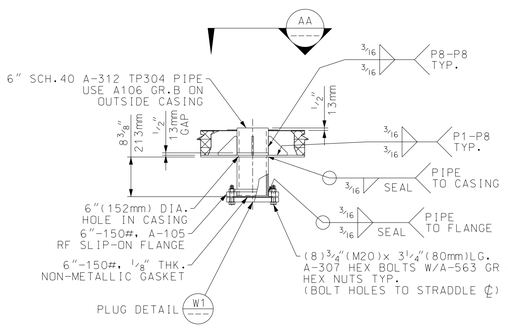

SECTION W 0001
6"-150# GRID TEST PORT
(1) REQ'D FOR RIGHT SIDE
(1) REQ'D FOR LEFT SIDE
(1) REQ'D FOR TOP OF DUCT

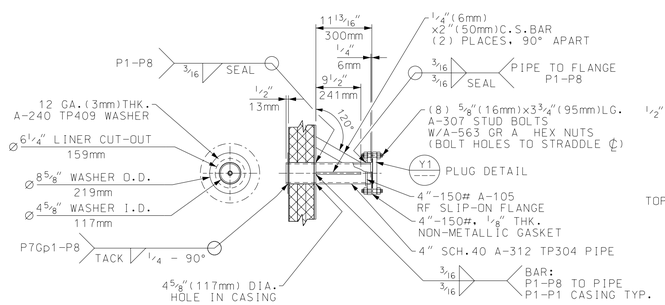

SECTION Y 0001
4"-150# TEST PORT
(1) REQ'D FOR RIGHT SIDE.
(1) REQ'D FOR LEFT SIDE.
(1) REQ'D FOR TOP.
(1) REQ'D FOR BOTTOM
(4) TOTAL

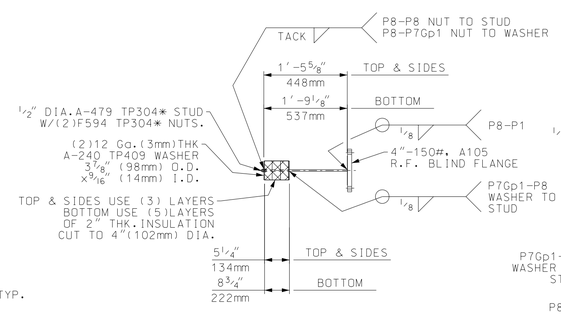

PLUG DETAIL Y1 ----

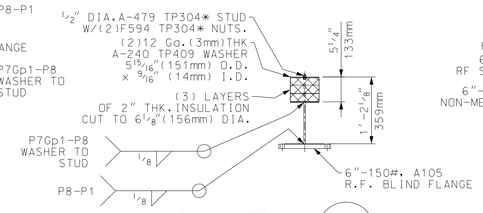

PLUG DETAIL W1 ----

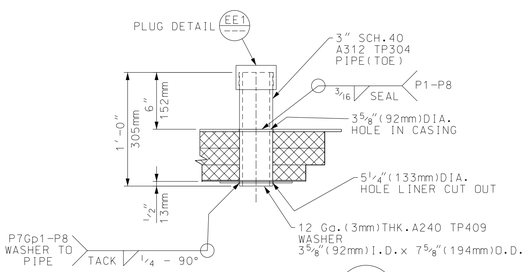

SECTION EE 0002
SKYCLIMBER PORT
(4) REQUIRED
SCALE: 1 1/2"= 1'-0"

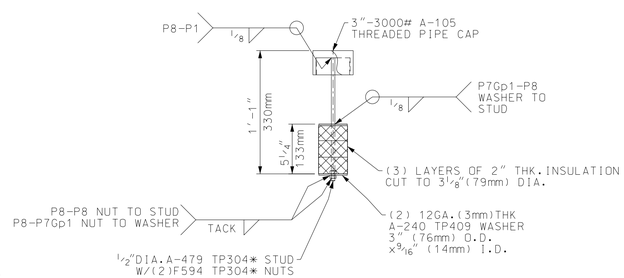

PLUG DETAIL EE1 ----
SCALE: 1 1/2" = 1'-0"

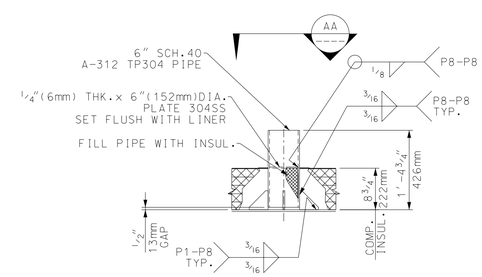

DETAIL 300 0001
(1) REQ'D FOR BOTTOM OF DUCT

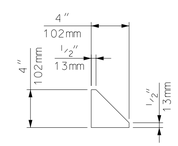

GUSSET DETAIL
SCALE: 1 1/2" = 1'-0"

NOTE:

1. SEE DRAWING V17494-DWND-0001 FOR GENERAL NOTES AND MATERIALS.

REFERENCE DRAWINGS:

V17494-DWND-0001 - INLET DUCT ASSEMBLY
V17494-DWND-0002 - INLET DUCT PLAN & BOTTOM VIEW
V17494-DWND-0003 THRU 0010 -INLET DUCT SECTIONS AND DETAILS
V17494-DWND-0011 & 12 - BLEED TURBULENCE BREAKER AND DETAILS
V17494-DWND-0050 - INSTALLATION OF LINER PANELS IN DUCTWORK CRITICAL AREAS.7 1/2"(191mm)STAGGERED PITCH STUD SPACING
V17494-DWND-0051 - INSTALLATION OF LINER PANELS IN DUCTWORK & CASING WITH FIELD INSULATED JOINTS. 15"(381mm)STUD SPACING
V17494-DWND-0052 - STANDARD INTERNALLY INSULATED CASING DETAILS

Rev.	Description	Date	Drawn	Chkd. 1	Chkd. 2	Appr.
03	REVISED CONNECTION IN SECTION T	21-APR-16	DR	REEVES	--	FRY
02	REVISED LINER MATERIAL FROM 309 TO 409 UNDO SDR-012	17-DEC-15	DR	REEVES	--	FRY
01	REVISED LINER MATERIAL FROM 409 TO 309 PER SDR-012	07-DEC-15	DR	REEVES	--	FRY
00	FIRST ISSUE	17-NOV-15	PK	BP	--	FRY

Revisions

This drawing contains Vogt Power International's confidential and proprietary information and cannot be used, duplicated or disclosed in whole or in part, except with the express written permission of Vogt Power International. EXCEPT AS EXPRESSLY STATED IN ANY WRITTEN CONTRACT - ALL WARRANTIES RELATING TO THIS DRAWING, INCLUDING THE WARRANTIES OF MERCHANTABILITY AND FITNESS, ARE DISCLAIMED.
©Vogt Power International, Inc. all rights reserved as an unpublished work.

MIDDLETOWN ENERGY CENTER
and
KINGS MOUNTAIN ENERGY CENTER
for
NTE ENERGY and GEMMA POWER SYSTEMS

VOGT POWER PROJECTS V17494 & V17495

3rd ANGLE PROJECTION

Scale: 3/4"=1'-0"

Title

HRSG INLET DUCT
SECTIONS & DETAILS

Vogt Power International
13551 Triton Park Blvd
Suite 2000
Louisville, Ky. 40223 USA
www.VogtPower.com

Internal Drawing Status	Size	Drawing No.	Rev.
FOR RECORD	D	V17494-DWND-0008	03