NOZZLE SCHEDULE

N#	DESCRIPTION	LINE NUMBER	NOZZLE NECK	END
1	BD TANK VENT SILENCER	BD3601	30" STD SA-106 GR.B PIPE	BUTT WELD
2	MANWAY	--	18" STD SA-106 GR.B PIPE	FLG.SLP.150# RF.SA-105 (SEE NOTE #19)
3	IP/LP BLOWDOWN TANK SPIDER	BD3006	14" STD SA-106 GR.B PIPE	FLG.SLP.150# RF.SA-105
4	HP BLOWDOWN TANK SPIDER	BD3002	10" SCH 40 SA-106 GR.B PIPE	FLG.SLP.150# RF.SA-105
5	FLASH TANK DRAIN TO BD TANK	BD3005	8" SCH 40 SA-335 GR.P11 PIPE	FLG.SLP.150# RF.SA-182 Gr. F11-2
6	BD TANK DRAIN	BD3591	6" SCH 40 SA-106 GR.B PIPE	FLG.SLP.150# RF.SA-105
7	BD TANK COOLING WATER INLET	BD3003	3" SCH 40 SA-106 GR.B PIPE	FLG.SLP.150# RF.SA-105
8	2" SPARE BLIND CONNECTION	--	2" SCH 80 SA-106 GR.B PIPE	PIPE CAP. 2" SCH. 80. SA-105. 3000#. SW
9	BD TANK LEVEL GAUGE(UPPER)	BD3703	1" SCH 80 SA-106 GR.B PIPE W/1"-3000# SW FLEXOLET SA-105	FLG.SLP.150# RF.SA-105
10	BD TANK LEVEL GAUGE(LOWER)	BD3704	1" SCH 80 SA-106 GR.B PIPE W/1"-3000# SW FLEXOLET SA-105	FLG.SLP.150# RF.SA-105
11	BD TANK THERMOWELL	TW-3001	1"-3000# SW FLEXOLET SA-105	SOCKET WELD
12	BD TANK DRAIN	BD3594	1.5"-3000# SW FLEXOLET SA-105	SOCKET WELD
13	BD TANK PRESSURE INDICATOR	BD3701	.75"-3000# SW FLEXOLET SA-105	SOCKET WELD

ASME MATERIAL SPEC.

SHELL: 1/2" THK. SA-516 GR. 70
HEADS: 1/2" THK. SA-516 GR. 70
PIPE: SA-106 GR.B, U.N.O.
COUPLINGS & FLANGES: SA-105, U.N.O.
WEAR PLATE: 1/4" THK. SA-387 GR.22

DESIGN PRESSURE: 50 PSIG
DESIGN TEMPERATURE: 300°F

GENERAL NOTES:

1. BLOWDOWN TANK MATERIAL AND CONSTRUCTION TO BE IN ACCORDANCE WITH ASME CODE SECTION VIII, 2013 EDITION.
2. HEADS TO BE 2:1 ELLIPTICAL DISHED.
3. FLANGE BOLT HOLES TO STRADDLE NATURAL CENTERLINES.
4. DO NOT SCALE THIS DRAWING. USE FIGURE DIMENSIONS ONLY.
5. CODE DOCUMENTATION AND STAMPING ARE REQUIRED.
6. ALL STUB PIPES AND END CONNECTIONS TO BE CAPPED OR PLUGGED BEFORE SHIPMENT.
7. TANK IS TO BE WEIGHED PRIOR TO SHIPMENT AND THE WEIGHT PAINTED ON THE TANK IN 3" HIGH NUMBERS.
8. ALL MATERIAL SUBSTITUTIONS MUST BE APPROVED BY VOGT POWER.
9. THE ANCHOR BOLTS ARE NOT PROVIDED BY VPI. HOWEVER, THE RECOMMENDED ANCHORAGE IS TWO (2) 1" DIA.x 9" EMBEDMENT DEPTH HILTI HAS SUPER A-193 B7 RODS WITH HVA ADHESIVE PER BASE PLATE. FOUR (4) BASE PLATES PER TANK TOTAL.
10. HYDROSTATIC TEST PRESSURE: 65 PSIG (4.5 barg).
11. ALL BUTT WELD END PREPARATIONS SHALL BE PER ASME B16.25 FIGURE 2A/3A.
12. ALL SOCKET WELDED PIPE SHALL BE SQUARE CUT.
13. ALL WELDS P1-P1 UNLESS NOTED OTHERWISE.
14. ALL MATERIAL LISTED AS 'CS' TO BE A36 OR EQUIV. UNLESS NOTED OTHERWISE.
15. APPROXIMATE WEIGHT OF ONE TANK= 11,698 LBS. 5,306 Kg.
16. ALL OLETS SHALL BE STRAIGHT I.D. BORE DESIGN (FLEX-O-LET) OR EQUAL.
17. QUANTITIES SHOWN ARE FOR (1) ONE TANK ASSEMBLY:
    -(1) ONE TANK REQUIRED FOR MIDDLETOWN PROJECT.
    -(1) ONE TANK REQUIRED FOR KINGS MOUNTAIN PROJECT.
18. ⊕ DENOTES CENTER OF GRAVITY. FABRICATOR TO LOCATE AND PAINT ON TANK. FABRICATOR TO LOCATE DIMENSIONALLY ON SHOP/ERECTION DRAWING.
19. N2 TO INCLUDE FLEXITALLIC GASKET, BOLTING HARDWARE, AND BLIND FLANGE.

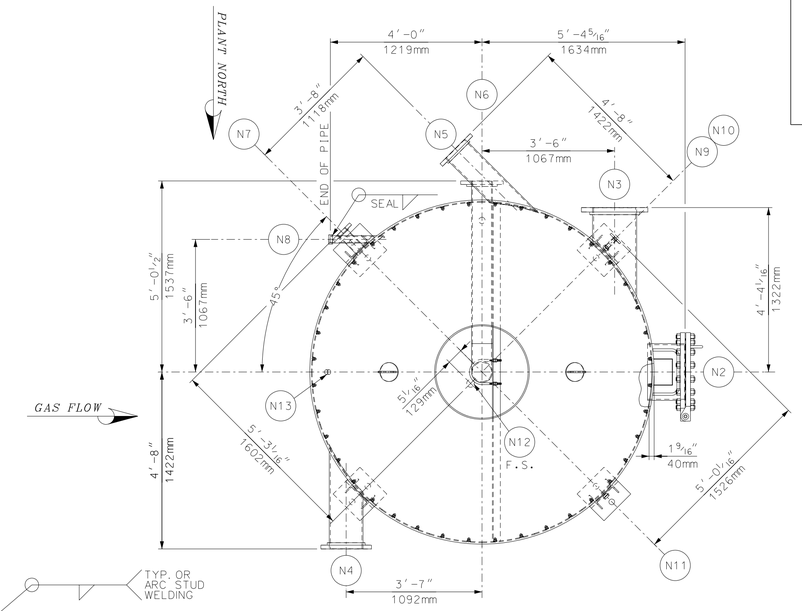

PLAN VIEW

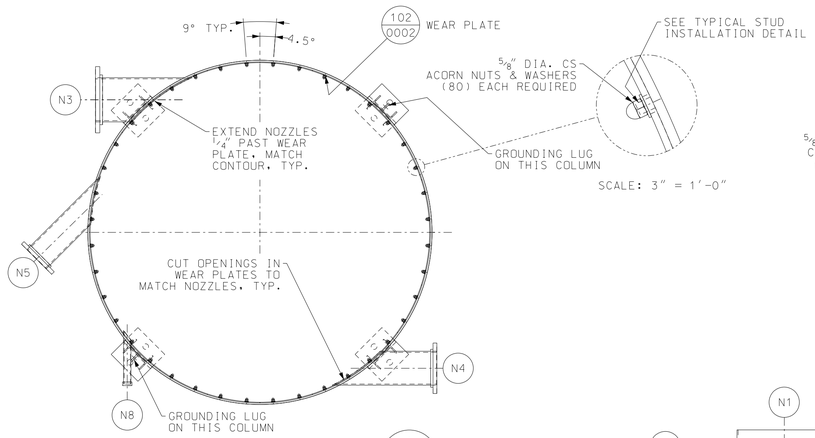

SECTION A

WEAR PLATE STUD SPACING
ONLY NOZZLES ON WEAR PLATE SHOWN

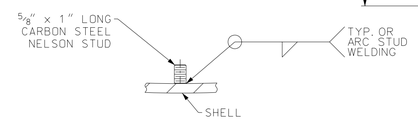

TYPICAL STUD INSTALLATION DETAIL

SCALE: 3/16" = 1"

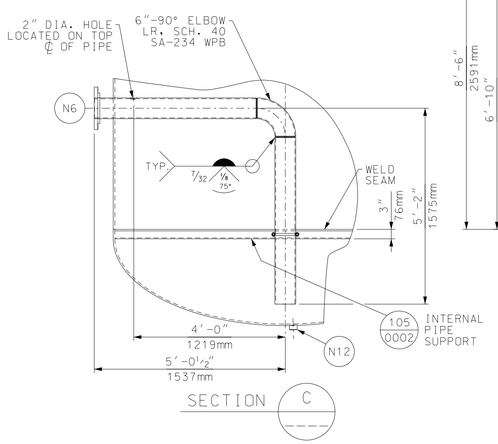

SECTION C

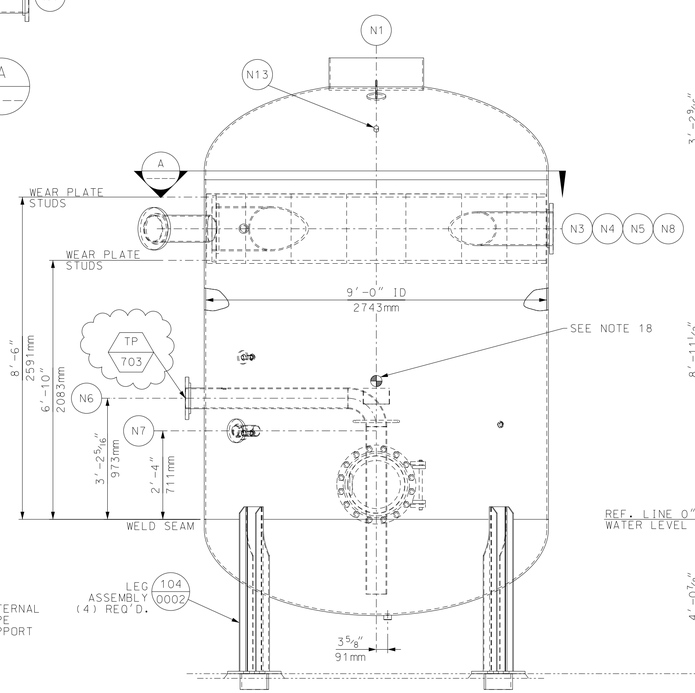

FRONT VIEW

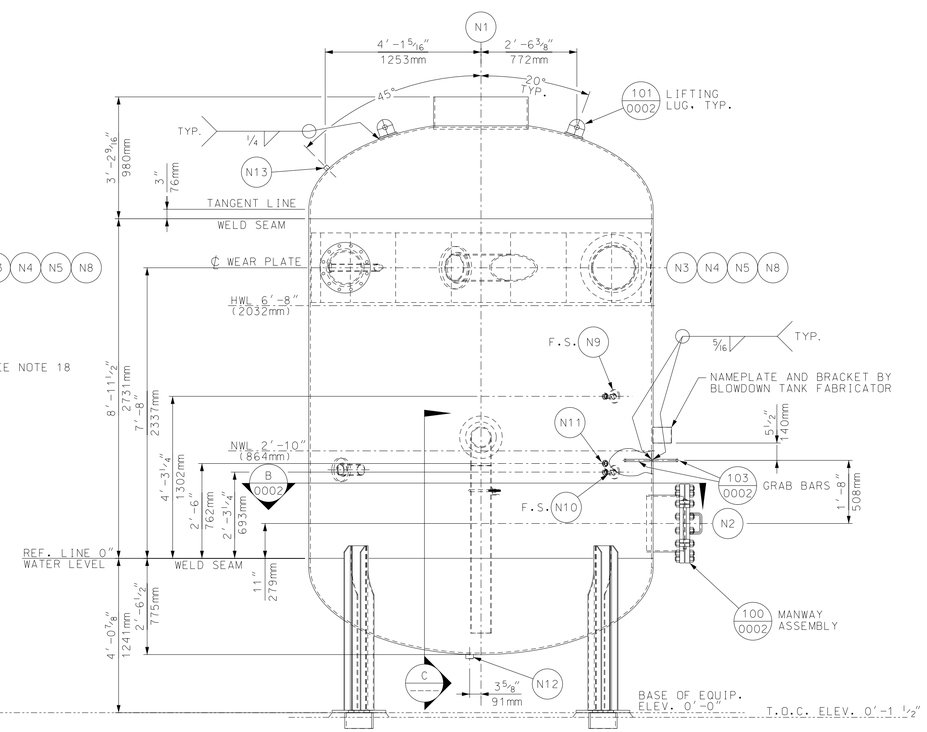

RIGHT ELEVATION VIEW

REFERENCE DRAWINGS:

V17494-BDND-0002 - HRSG BLOWDOWN TANK DETAILS
V17494-BDND-0003 - HRSG BLOWDOWN TANK DETAILS
V17494-EBNC-0001 - PAINT SPECIFICATION

Rev.	Description	Date	Drawn	Chkd. 1	Chkd. 2	Appr.
02	ADDED TERMINAL POINT NUMBER	03-JUNE-16	DR	REEVES	-	FRY
01	LEGS REVISED ADDED TANGENT LINE DIM - RFI.0117	4-APR-16	PN	REEVES	-	FRY
00	FIRST ISSUE	09-FEB-16	BML	BJD	-	FRY

Revisions

This drawing contains Vogt Power International's confidential and proprietary information and cannot be used, duplicated or disclosed in whole or in part, except with the express written permission of Vogt Power International. EXCEPT AS EXPRESSLY STATED IN ANY WRITTEN CONTRACT - ALL WARRANTIES RELATING TO THIS DRAWING, INCLUDING THE WARRANTIES OF MERCHANTABILITY AND FITNESS, ARE DISCLAIMED. ©Vogt Power International, Inc. all rights reserved as an unpublished work.

MIDDLETOWN ENERGY CENTER
and
KINGS MOUNTAIN ENERGY CENTER
for
NTE ENERGY and GEMMA POWER SYSTEMS

VOGT POWER PROJECTS V17494 & V17495

3rd ANGLE PROJECTION

Scale: 1/2" = 1'-0"

Title

BLOWDOWN TANK ASSEMBLY
108" ID

Vogt Power International
13551 Triton Park Blvd
Suite 2000
Louisville, Ky. 40223 USA
www.VogtPower.com

Internal Drawing Status	Size	Drawing No.	Rev.
FOR RECORD	D	V17494-BDND-0001	02