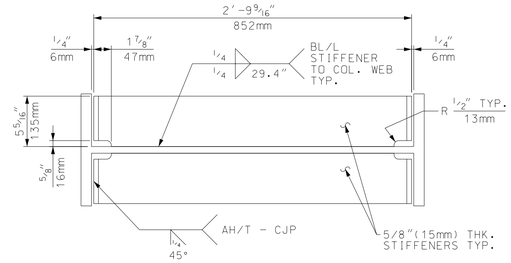

SECTION C.1
SCALE : 1 1/2"= 1'-0"
TYP. STIFFENER DETAILS

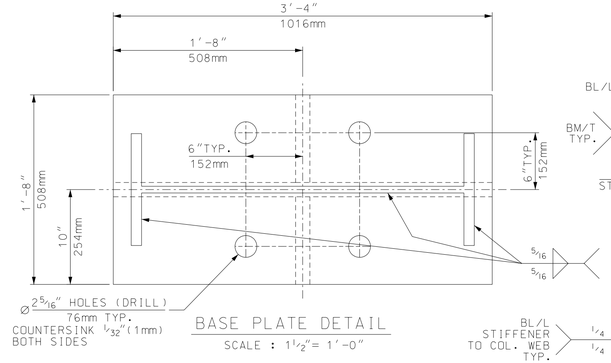

BASE PLATE DETAIL
SCALE : 1 1/2"= 1'-0"

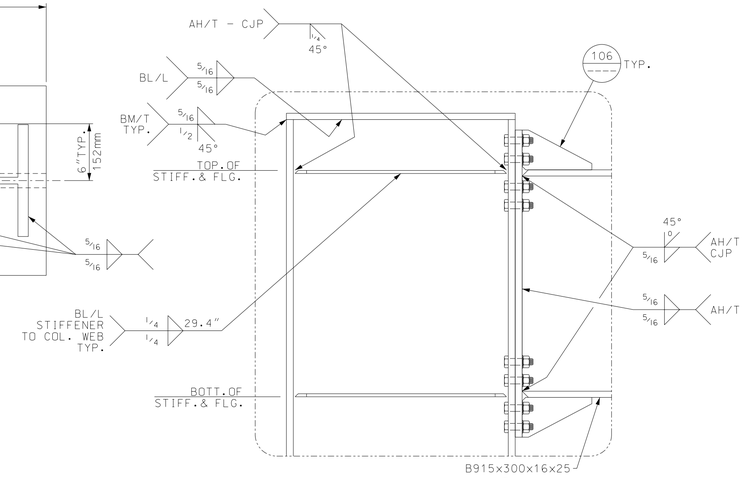

DETAIL 104
SCALE : 1"= 1'-0"

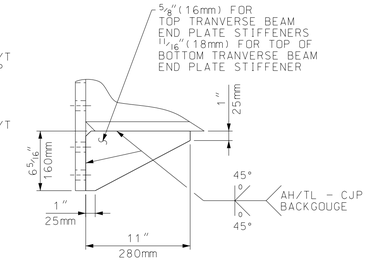

DETAIL 106
SCALE : 1 1/2"= 1'-0"

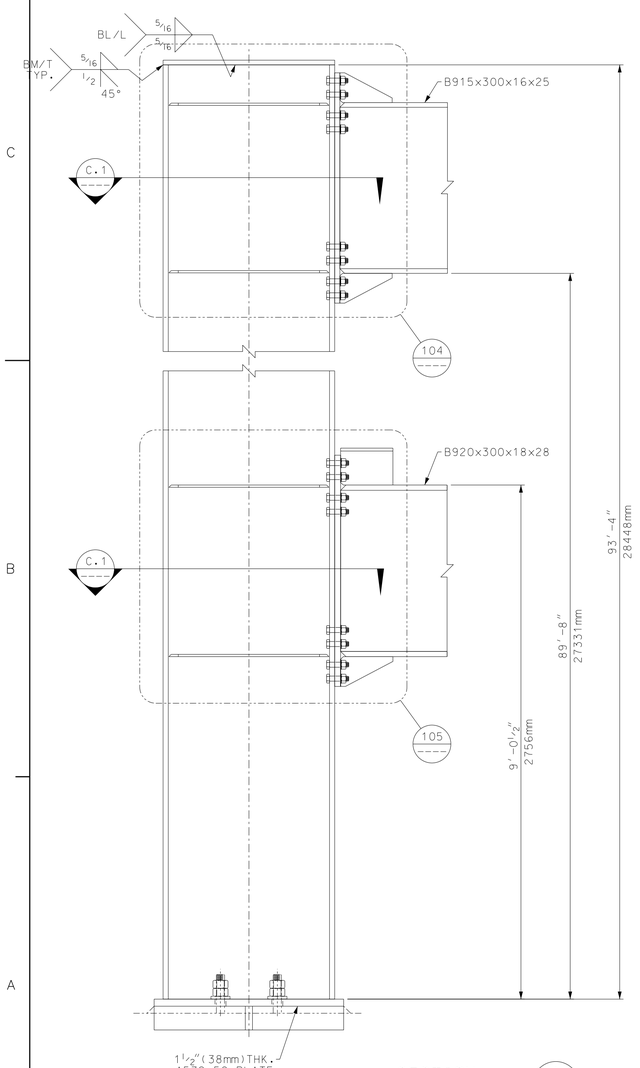

SECTION A 0025
COLUMN LINE "K" AS SHOWN
COLUMN LINE "L" SIMILAR
LEFT SIDE SHOWN.
RIGHT SIDE OPPOSITE

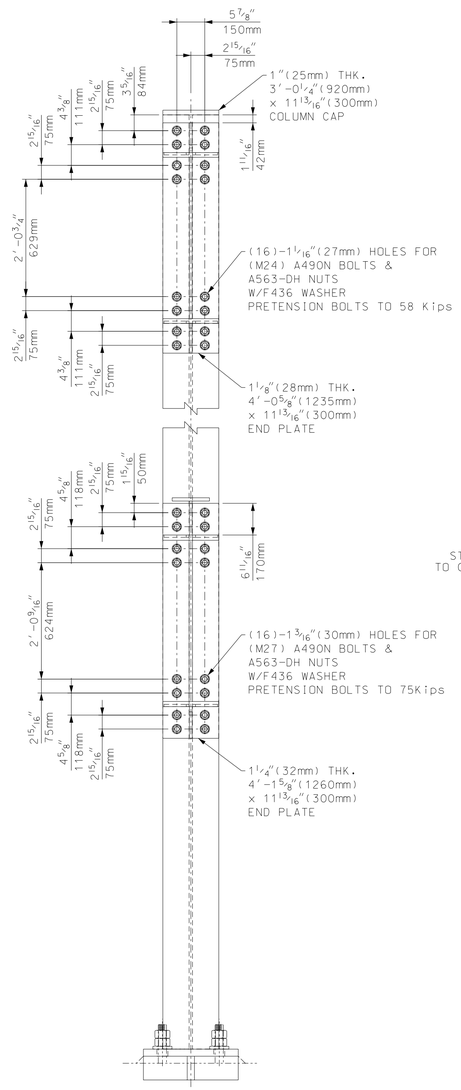

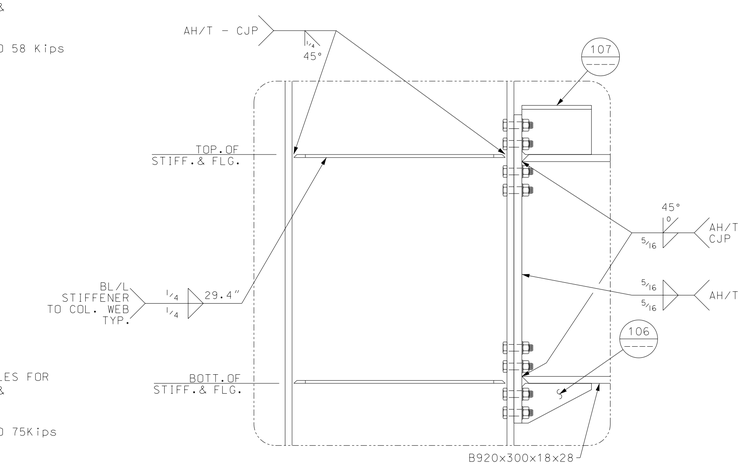

DETAIL 105
SCALE : 1"= 1'-0"

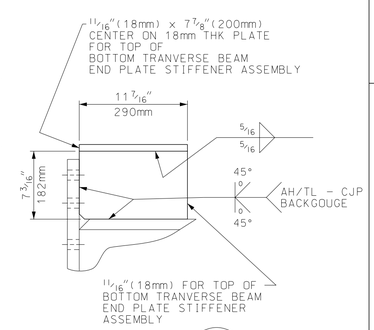

DETAIL 107
SCALE : 1 1/2"= 1'-0"

NOTES:

1. SEE DRAWING V17494-DWND-0025 FOR GENERAL NOTES AND MATERIALS.
2. ALL STEELWORK SHALL COMPLY WITH THE AISC SPECIFICATIONS FOR THE DESIGN, FABRICATION AND ERECTION OF STRUCTURAL STEEL.
3. PRE QUALIFIED WELD PROCEDURES FOR COMPLETE PENETRATION JOINTS MUST BE SUBMITTED TO VOGT POWER FOR APPROVAL PRIOR TO WELDING.
4. THE QA/QC CATEGORY IS LISTED FOR EVERY DEMAND CRITICAL WELD. IT HAS THREE LETTERS WITH A FORWARD SLASH (/)SEPARATING THE SECOND AND THIRD LETTERS. THE FIRST LETTER (A, B OR C) IS THE SEISMIC WELD DEMAND CATEGORY.
   THE SECOND LETTER (H, M OR L) IS THE SEISMIC WELD CONSEQUENCE CATEGORY.
   THE THIRD LETTER (T OR L) INDICATES WHETHER THE WELD IS LOADED TRANSVERSELY (T) OR LONGITUDINALLY (L). THIS CODE IS USED WITH THE WELD NDT REQUIREMENTS CHART TO SPECIFY THE EXTENT OF NON-DESTRUCTIVE TESTING REQUIRED FOR THE WELD.
5. UT IS REQUIRED ONLY WHEN THE WELD THROAT IS 5/16"(8mm) OR GREATER.
6. REDUCE THE RATE OF UT, WHERE NOTED, IF AFTER 40 WELDS, AN INDIVIDUAL WELDER'S REJECT RATE IS LESS THAN 5%.
7. PARTIAL LENGTH TESTING IS APPLICABLE FOR LONGITUDINALLY LOADED WELDS WHEN OVER 24"(600mm)IN LENGTH. INSPECT 6"(150mm) AT THE BEGINNING AND END OF EACH WELD, PLUS WHERE A START AND RESTART IS VISUALLY NOTED FOR A DISTANCE OF 6" (150mm) ON EITHER SIDE OF THE START/STOP LOCATION, AND A 6"(150mm) LENGTH FOR EVERY 10'(3M) FOR A GIVEN WELD.
8. IN LIEU OF SEAL WELDING AND PRIOR TO PAINTING APPLY BUTYL RUBBER CAULK TO SEAL WELD THE JOINT AT THE HOLD BACKS ON THE ENDS OF THE WELDS.
9. ALL PLATES TO BE JIS G3101-SS400 U.N.O.

REFERENCE DRAWINGS:

V17494-DWND-0025 - CO/SCR DUCT ASSEMBLY
V17494-DWND-0027 THRU 0032 - CO/SCR DUCT SECTIONS & DETAILS
V17494-DWND-0051 - INSTALLATION OF LINERS IN DUCTWORK & CASING, FI JOINTS, 15" SPACING
V17494-DWND-0052 - STANDARD INTERNALLY INSULATED CASING DETAILS
V17494-ESND-0010 - HRSG SEISMIC STRUCTURAL GENERAL NOTES
V17494-SRND-0001 - SCR CATALYST SUPPORT FRAME ASSEMBLY
V17494-SRND-0020 - AIG SYSTEM-INJECTION PIPE ASSEMBLIES

DEMAND CRITICAL WELD NDT REQUIREMENTS

SEISMIC WELD CONSEQUENCE CATEGORY	SEISMIC WELD DEMAND CATEGORY A	SEISMIC WELD DEMAND CATEGORY B	SEISMIC WELD DEMAND CATEGORY C
H	CJP MT 100% OF JOINTS, FULL LENGTH UT 100% OF JOINTS, FULL LENGTH PJP, FILLETS MT 100% OF JOINTS, FULL LENGTH	CJP MT 100% OF JOINTS, FULL LENGTH IF TRANSVERSELY LOADED, PARTIAL LENGTH IF LONGITUDINALLY LOADED. UT 100% OF JOINTS, FULL LENGTH IF TRANSVERSELY LOADED, PARTIAL LENGTH IF LONGITUDINALLY LOADED. (REDUCE UT TO 25% OF JOINTS, OF LENGTH AS ABOVE, WITH LOW REJECT RATE) PJP, FILLETS MT 25% OF JOINTS, FULL LENGTH IF TRANSVERSELY LOADED, PARTIAL LENGTH IF LONGITUDINALLY LOADED.	CJP UT 10% OF JOINTS, FULL LENGTH IF TRANSVERSELY LOADED, PARTIAL LENGTH IF LONGITUDINALLY LOADED. PJP, FILLETS MT 10% OF JOINTS, 6"(150mm) SPOT AT RANDOM
M	CJP MT 100% OF JOINTS, FULL LENGTH UT 100% OF JOINTS, FULL LENGTH (REDUCE UT TO 25% OF JOINTS, OF LENGTH ABOVE, WITH HIGH ACCEPTANCE RATE) PJP, FILLETS MT 100% OF JOINTS, FULL LENGTH	CJP MT 100% OF JOINTS, FULL LENGTH IF TRANSVERSELY LOADED, PARTIAL LENGTH IF LONGITUDINALLY LOADED. UT 100% OF JOINTS, FULL LENGTH IF TRANSVERSELY LOADED, PARTIAL LENGTH IF LONGITUDINALLY LOADED. (REDUCE UT TO 25% OF JOINTS, OF LENGTH AS ABOVE, WITH LOW REJECT RATE) PJP, FILLETS MT 25% OF JOINTS, FULL LENGTH IF TRANSVERSELY LOADED, PARTIAL LENGTH IF LONGITUDINALLY LOADED.	NO NDT REQUIRED
L	CJP MT 25% OF JOINTS, FULL LENGTH UT 25% OF JOINTS, FULL LENGTH PJP, FILLETS MT 10% OF JOINTS, 6"(150mm) SPOT AT RANDOM	CJP UT 10% OF JOINTS, FULL LENGTH PJP, FILLETS MT 10% OF JOINTS, 6"(150mm) SPOT AT RANDOM	NO NDT REQUIRED

REFERENCE NOTES 4, 5, 6 & 7.

Rev.	Description	Date	Drawn	Chkd. 1	Chkd. 2	Appr.
02	CORRECTED LOWER END PLATE THICKNESS (CAD GEOMETRY ONLY)	07-MAR-16	DR	REEVES	---	FRY
01	CORRECTED TITLE BLOCK ADDED CAP PLATE WELD	12-JAN-16	DR	REEVES	---	FRY
00	FIRST ISSUE	21-DEC-15	DSK	RLW	---	FRY

Revisions

This drawing contains Vogt Power International's confidential and proprietary information and cannot be used, duplicated or disclosed in whole or in part, except with the express written permission of Vogt Power International. EXCEPT AS EXPRESSLY STATED IN ANY WRITTEN CONTRACT - ALL WARRANTIES RELATING TO THIS DRAWING, INCLUDING THE WARRANTIES OF MERCHANTABILITY AND FITNESS, ARE DISCLAIMED.
©Vogt Power International, Inc. all rights reserved as an unpublished work.

MIDDLETOWN ENERGY CENTER
and
KINGS MOUNTAIN ENERGY CENTER
for
NTE ENERGY and GEMMA POWER SYSTEMS
VOGT POWER PROJECTS V17494 & V17495

3rd ANGLE PROJECTION

Scale: 3/4"=1'-0"

Title
CO/SCR DUCT SECTIONS AND DETAILS

Vogt Power International
13551 Triton Park Blvd
Suite 2000
Louisville, Ky. 40223 USA
www.VogtPower.com

Internal Drawing Status	Size	Drawing No.	Rev.
FOR RECORD	D	V17494-DWND-0026	02