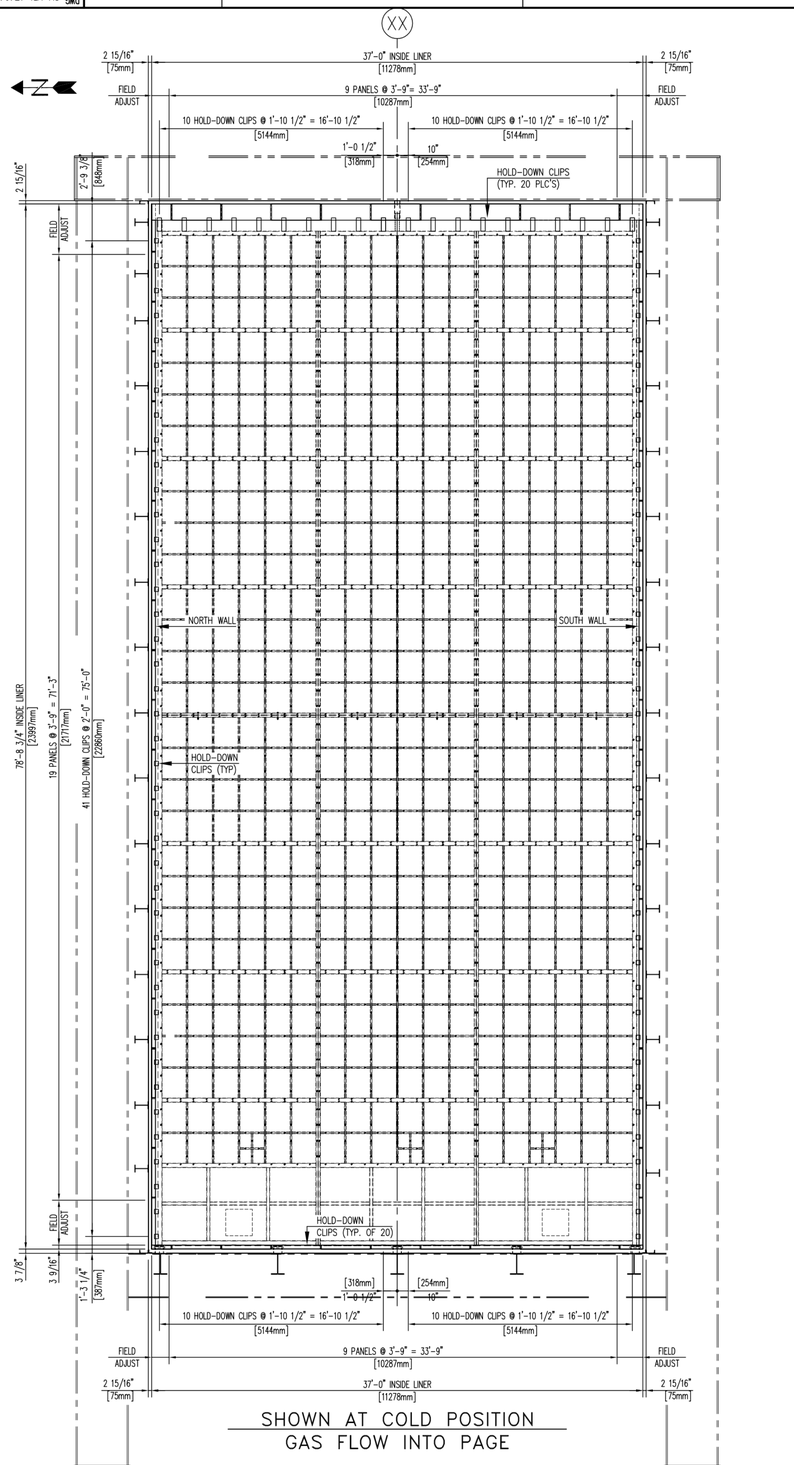

SHOWN AT COLD POSITION
GAS FLOW INTO PAGE

CO CATALYST BAFFLE PLATE ELEVATION

3/16" = 1'-0"

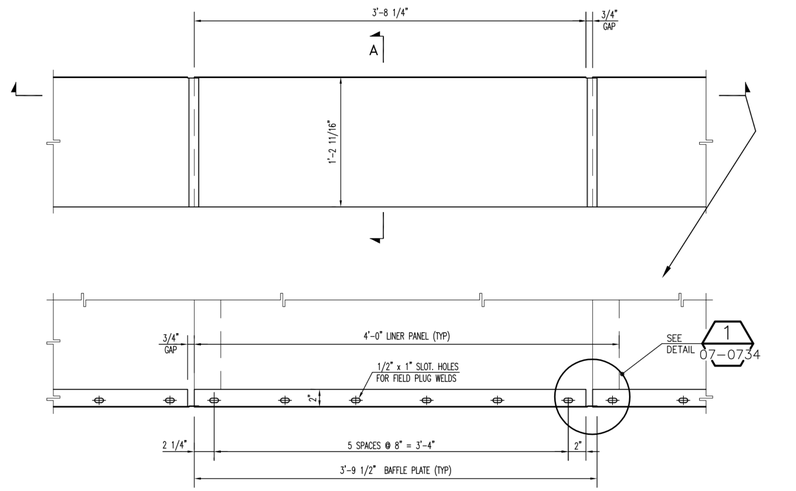

ROOF LEVEL BAFFLE PLATE DETAILS

1 1/2" = 1'-0"

(11 REQUIRED PER UNIT)

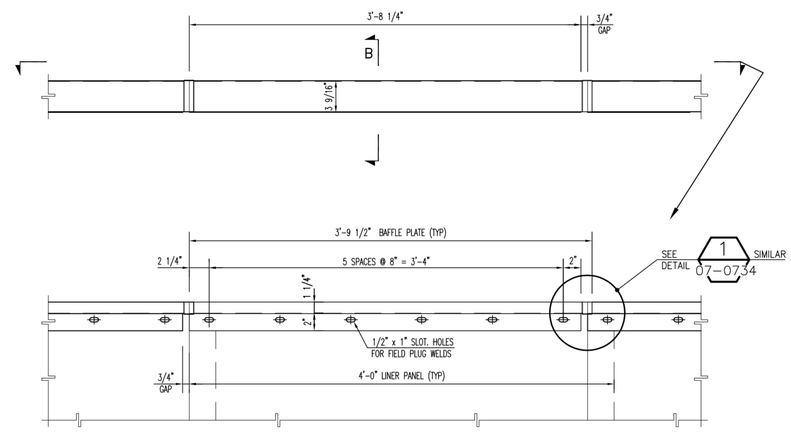

FLOOR LEVEL BAFFLE PLATE DETAILS

1 1/2" = 1'-0"

(11 REQUIRED PER UNIT)

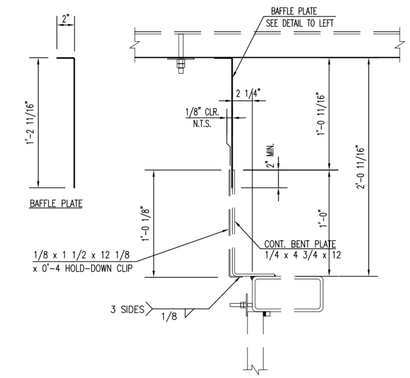

SECTION A–A

1 1/2" = 1'-0"

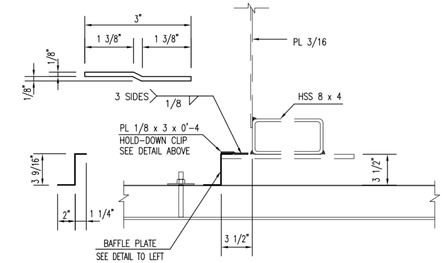

SECTION B–B

1 1/2" = 1'-0"

REVISIONS					
Rev.	BY	CHK	APPR	DATE	CONTENT
0	B.Y.	P.T.	M.T.	08-05-16	APPROVED FOR CONSTRUCTION

NOTE:

1. ALL BAFFLE PLATES SHALL BE 16 GAGE A-1011 CARBON STEEL.
2. DESIGN TEMPERATURE = 740°F.
3. FIELD INSPECTION SHALL BE PERFORMED DURING AND AFTER ALL BAFFLE PLATES INSTALLATION. REMAINING GAP TO BE FILLED COVERED WITH 16 GAGE STAINLESS STEEL SHEET WITH APPROPRIATE WELD.
4. ADDITIONAL HOLES SHALL BE CUT IN FIELD TO FIT THE PIPE PENETRATIONS OR OTHER INSTALLATIONS AS REQUIRED.

VOGT POWER INTERNATIONAL
V17494-CVXD-5006-07
09-Aug-2016

VOGT POWER INTERNATIONAL	
Released, Work May Proceed	
Bell, Milton	Aug-20-2016

FILED NOTE:

DO NOT WELD ONE (1) BAFFLE PLATE TO MORE THAN ONE (1) LINER PLATE.

THIS DRAWING CONTAINS PROPRIETARY INFORMATION WHICH MAY BE HELD CONFIDENTIAL AND MAY NOT BE REPRODUCED OR DISCLOSED TO OTHERS WITHOUT THE WRITTEN CONSENT OF SYNERGY OR A DULY AUTHORIZED REPRESENTATIVE THEREFORE.

PO NO. (MT): SYN1922 PO NO. (KM):		SYNERGY LP Amina
SYSTEM TAG NO.:		VOGT POWER INTERNATIONAL MIDDLETOWN, OH – V17494 KINGS MOUNTAIN, NC – V17495 CO CATALYST BAFFLE PLATE DETAILS (1)
DESIGNED B.YANG	DATE 11-11-2015	
DRAWN B.YANG	DATE 11-11-2015	
CHECKED N.TANAKA	DATE 11-11-2015	SIZE: D / DRAWING NUMBER: SY-VPI-17494-05 / REV: 0
APPROVED M.THORNHILL	DATE 11-11-2015	LPA 035-07-0733 / SCALE: AS NOTED / SHEET 1

THIS DRAWING IS THE PROPERTY OF LP AMINA COMPANY LTD. AND CONTAINS PROPRIETARY INFORMATION WHICH IS PROTECTED UNDER THE PATENT, COPYRIGHT, AND/OR TRADE SECRET LAWS. NEITHER THIS DRAWING NOR ANY OF ITS CONTENTS IS TO BE USED, REPRODUCED, OR DISCLOSED WITHOUT THE PRIOR WRITTEN PERMISSION OF LP AMINA COMPANY LTD. (C) 2016 LP AMINA, PATENT PENDING