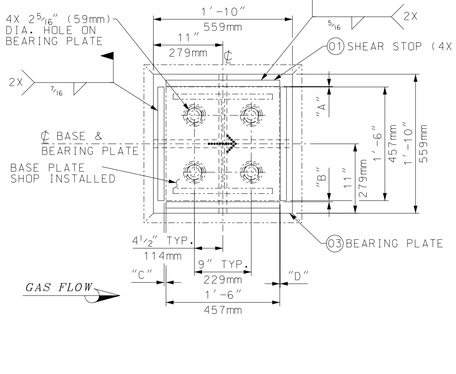

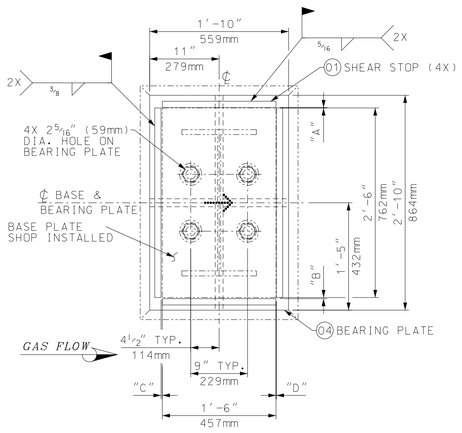

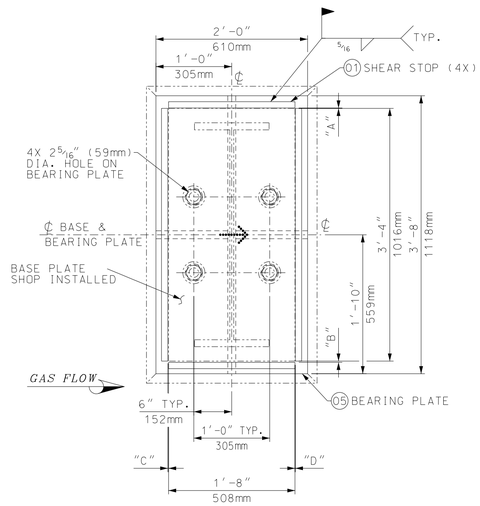

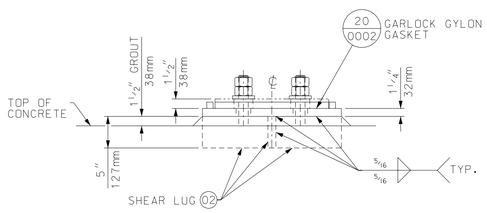

BASE PLATE ASS'Y BP010

4 REQUIRED FOR COLUMN A1, A2, B1, B2
WEIGHT EACH: 406 Lbs (184 Kg)

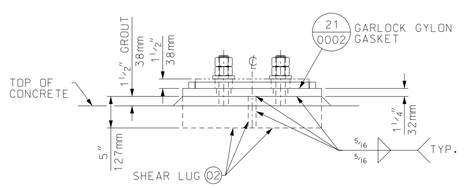

BASE PLATE ASS'Y BP011

2 REQUIRED FOR COLUMN C1, C2
WEIGHT EACH: 619 Lbs (281 Kg)

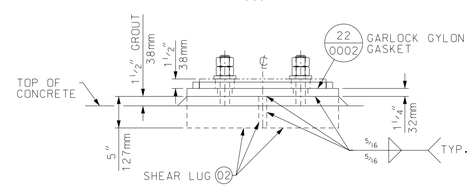

BASE PLATE ASS'Y BP012

2 REQUIRED FOR COLUMN D1, D2
WEIGHT EACH: 867 Lbs (393 Kg)

BASE PLATES ARE SHOP INSTALLED ON THE COULMNS
(SEE V17494-DWND-0001 THRU 0005)

BEARING PLATES, SHEAR STOPS & GYLON GASKETS
ARE THE LIMIT OF SCOPE OF THESE DRAWINGS

GAPS AT SHEAR STOPS

		DIMENSION			
ASS'Y	COLUMN	"A"	"B"	"C"	"D"
BP010	A1	1/16"	3/16"	5/16"	1/16"
	A2	3/16"	1/16"	5/16"	1/16"
	B1	1/16"	3/16"	1/4"	1/16"
	B2	3/16"	1/16"	1/4"	1/16"
BP011	C1	1/16"	3/16"	3/16"	1/16"
	C2	3/16"	1/16"	3/16"	1/16"
BP012	D1	1/16"	3/16"	1/8"	1/16"
	D2	3/16"	1/16"	1/8"	1/16"

BILL OF MATERIAL

PART	QTY	DESCRIPTION	MAT'L SPEC.
01	60	LIN. FT OF SQ. BAR. 1" (25mm)	A572-50
02	34.6	LIN. FT OF FLAT BAR. 1 1/4" (38mm) X 5" (127mm)	A572-50
03	4	PLATE. 1 1/4"(38mm) THK. X 1'-10" (559mm) SQUARE	A572-50
04	2	PLATE. 1 1/4" (38mm) THK. X 1'-10" (559mm) X 2'-10" (864mm)	A572-50
05	2	PLATE. 1 1/4" (38mm) THK. X 2'-0" (610mm) X 3'-8" (1118mm)	A572-50

PART NUMBERS ARE TO HAVE THE PREFIX OF "BP":
FOR EXAMPLE. "01" (PART NUMBER) WOULD BE "BP01".

1. OWNER'S DESIGNATED REPRESENTATIVE SHALL VERIFY THE ACTUAL LOCATION AND ELEVATION OF COLUMN ANCHOR BOLTS AND SHEAR KEY POCKETS. AFTER FOUNDATION PLACEMENT AND PRIOR TO BASE PLATE AND STEEL FRAME ERECTION. VPI SHALL BE NOTIFIED OF ANY DISCREPANCIES.
2. ALL BASE PLATES, BEARING PLATES, & SHEAR STOPS. TO BE MARKED AND BANDED WITH GASKETS PER ASSEMBLY (AS REQUIRED) FOR SHIPMENT.
3. GROUT BASE OR BEARING PLATES BEFORE SETTING AND LEVELING THE STEEL FRAME.
4. ALL WELDING SHALL CONFORM TO AWS D1.1 CURRENT EDITION.
5. ANCHOR BOLTS, NUTS, & WASHERS ARE NOT FURNISHED BY VPI OR BASE PLATE FABRICATOR.
6. WHEN BASE PLATES ARE SHIPPED SEPARATELY, IT IS THE ERECTION CONTRACTOR'S RESPONSIBILITY TO ADJUST BASE PLATES AS REQUIRED TO ALLOW EXPANSION AS NOTED ON FOUNDATION LOADING TABLE DOCUMENT V17494-FLNF-0001.
7. SHEAR STOP LOCATIONS ARE TO BE CERTIFIED BY VPI (FIELD REP.) BEFORE FINAL WELD IS MADE TO THE BEARING PLATES FOR THE COLUMNS WITH BASE AND BEARING PLATES.
8. FOR PAINTING & SURFACE PREPARATION SEE V17494-EBNC-0001.
9. ORIENTATION ARROW → TO BE STAMPED ON BP010 & BP011 BASE PLATE ONLY IN THE DIRECTION OF GAS FLOW.
10. GROUTING SHALL BE PERFORMED IN ACCORDANCE TO MANUFACTURER RECOMMENDATION AND ACI 351-1R-99.
11. GROUT SHALL BE PLACED FROM ONLY ONE SIDE TO PREVENT ENTRAPMENT OF AIR OR WATER BENEATH THE BEARING PLATE ASSEMBLY.
12. ALL WELDS TO BE P1-P1 UNLESS OTHERWISE NOTED.
13. GARLOCK GYLON 3510 IS TO BE CUT TO SIZE AND ANCHOR BOLT HOLES TO BE PUNCHED.
14. ALL DRILLED HOLES TO BE COUNTERSUNK 1/32" (1mm) BOTH SIDES.
15. TOLERANCES:
    a.) WIDTH & LENGTH OF PLATES SHALL HAVE A TOLERANCE OF ± 1/8" (3mm)
    b.) ANCHOR BOLT GROUP SHALL HAVE A TOLERANCE OF ±1/8" (3mm) CENTER TO CENTER OF ANY TWO BOLTS.
    c.) BASE & BEARING PLATES UTILIZING GARLOCK GYLON ARE TO BE FLAT AND SMOOTH. WITH A TOLERANCE OF 1/4" (2mm) ACROSS ENTIRE SURFACE OF THE PLATE.
    d.) BASE PLATES WITHOUT BEARING PLATE SHALL HAVE A TOLERANCE OF 1/8" (3mm) ON ONE SIDE OR 1/4" (6mm) ON BOTH SIDES. DEBURR ALL EDGES.
16. ALL QUANTITIES SHOWN ARE FOR ONE (1) UNIT.
    -(1) ONE UNIT REQUIRED FOR MIDDLETOWN PROJECT.
    -(1) ONE UNIT REQUIRED FOR KINGS MOUNTAIN PROJECT.

REFERENCE DRAWINGS:

V17494-FLND-0001 - H.R.S.G. FOUNDATION DIAGRAM
V17494-BPND-0002 - GYLON GASKET MATERIAL FOR BASE PLATE ASSEMBLIES

Rev.	Description	Date	Drawn	Chkd. 1	Chkd. 2	Appr.
00	FIRST ISSUE	07-DEC-15	JP	WSP	--	FRY

Revisions

This drawing contains Vogt Power International's confidential and proprietary information and cannot be used, duplicated or disclosed in whole or in part, except with the express written permission of Vogt Power International. EXCEPT AS EXPRESSLY STATED IN ANY WRITTEN CONTRACT - ALL WARRANTIES RELATING TO THS DRAWING, INCLUDING THE WARRANTIES OF MERCHANTABILITY AND FITNESS, ARE DISCLAIMED.
©Vogt Power International, Inc. all rights reserved as an unpublished work.

MIDDLETOWN ENERGY CENTER
and
KINGS MOUNTAIN ENERGY CENTER
for
NTE ENERGY and GEMMA POWER SYSTEMS

VOGT POWER PROJECTS V17494 & V17495

3rd ANGLE PROJECTION

Scale: 1" = 1'-0"

Title
BEARING PLATE & SHEAR STOP ASSEMBLIES & DETAILS

Vogt Power International
13551 Triton Park Blvd
Suite 2000
Louisville, Ky. 40223 USA
www.VogtPower.com

Internal Drawing Status	Size	Drawing No.	Rev.
FOR RECORD	D	V17494-BPND-0001	00