VOGT POWER INTERNATIONAL	
Review Waived	
Bell, Milton	Apr-04-2016

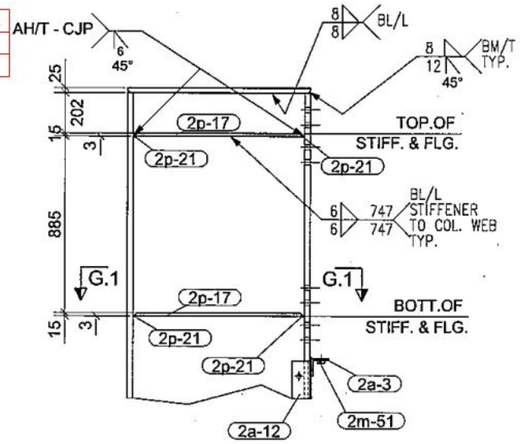

DETAIL- 1

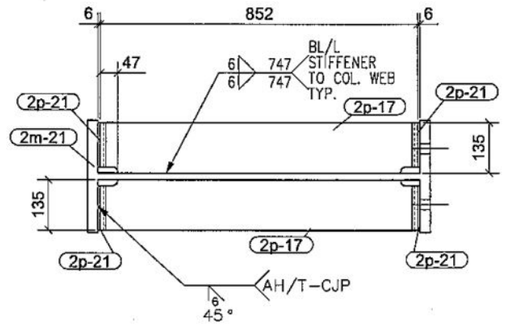

G.1 - G.1

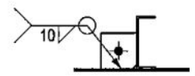

TYP. LIFTING LUG.

NOTE : THIS STIFFENER IS USE FOR SHOP HANDLING PURPOSED ONLY

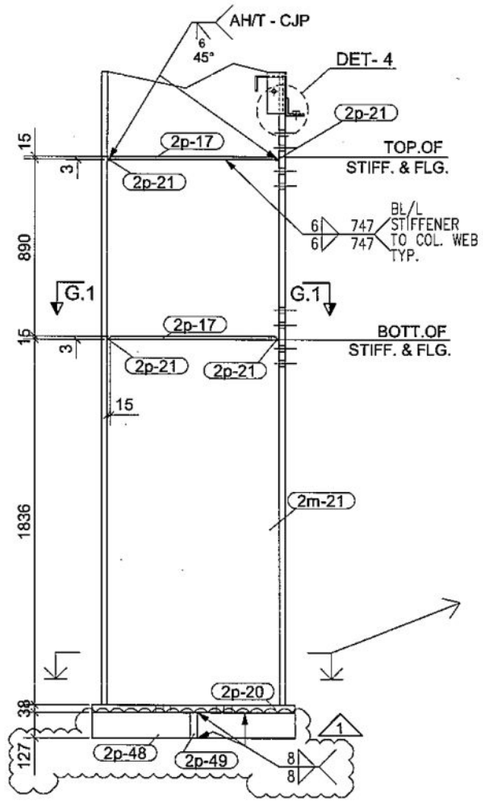

DETAIL- 2

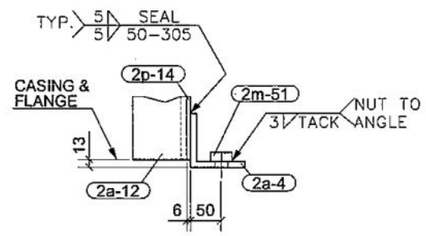

DETAIL- 4

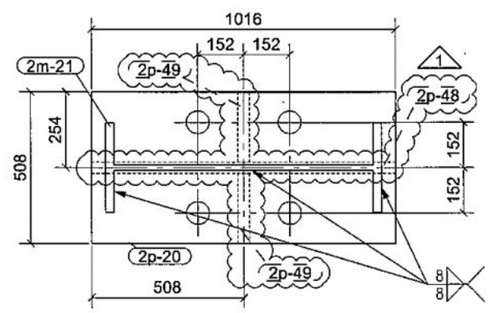

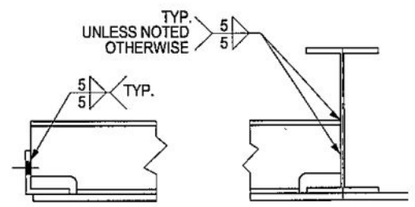

TYP. COPE DETAIL

VOGT POWER INTERNATIONAL
V17494-DWXD-7474-01
22-Mar-2016

REV.	DATE.	DESCRIPTION	DRAWN	CHKD.	APPROD.
1	27/02/20	ADD PART No.	S.Kitsana	Chatchai	
0	05/02/20	FIRST ISSUE	S.Kitsana	"	

This drawing contains Visavakit Patana Corp., Ltd.'s confidential and proprietary information and cannot be used, duplicated or disclosed in whole or in part, except with the express written permission of Visavakit Patana Corp., Ltd.

© Visavakit Patana Corp., Ltd. all rights reserved as an unpublished work.

VISAVAKIT PATANA CORPORATION LIMITED
OFFICE : 215/148-149 Prachard 1 Road , Bangkok 10800 Tel. : 0-2585-2556-8 Fax : 0-2587-6068
PLANT 1 : 28/2 Moo 4 , Sci Chai Uo , Pathumthani 12000 Tel.:0-2975-2811-4 Fax: 0-2975-2815
PLANT 2 : 52 Moo7 , Kubangluang , Ladlumkaew , Pathumthani 12140 Tel.:0-2979-4001-9 Fax: 0-2979-4010
www.vipco-thai.com Email : vipco@vipco-thai.com

TITLE

VOGT POWER INTERNATIONAL
MIDDLETOWN ENERGY CENTER PROJECT
CO / SCR DUCT (CASING)
LEFT PANEL

ISO-A (3rd)

JOB NO. 1711

REF.DWG.NO. Y15-1711-E0201~E0203

VIPCO DWG.NO. Y15-1711- DWCO/SCR-L4-03

REV 1