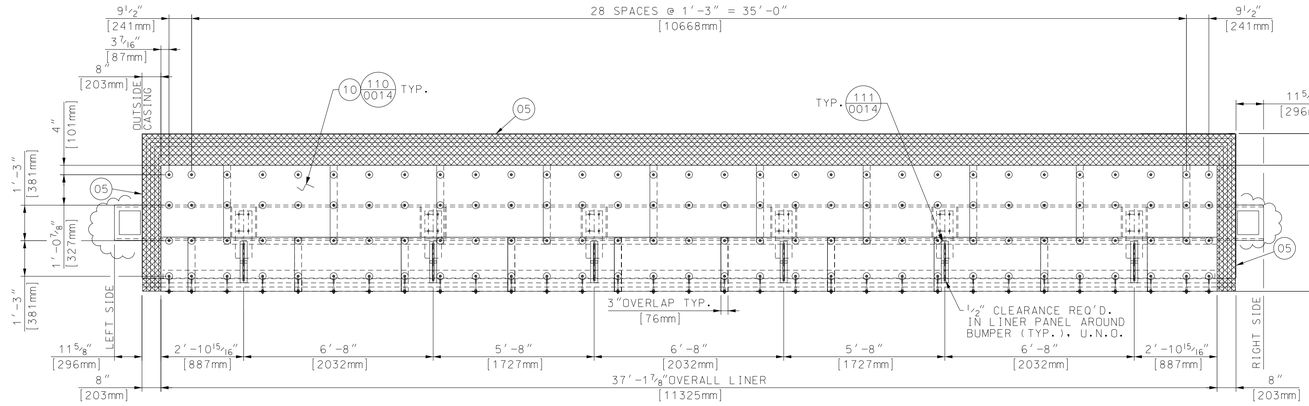

INSIDE VIEW

BAFFLE NOT SHOWN FOR CLARITY

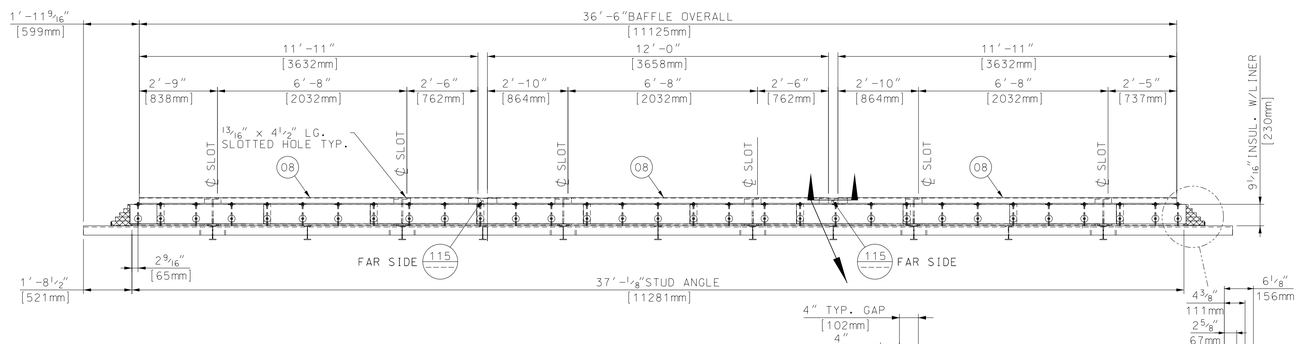

TOP VIEW

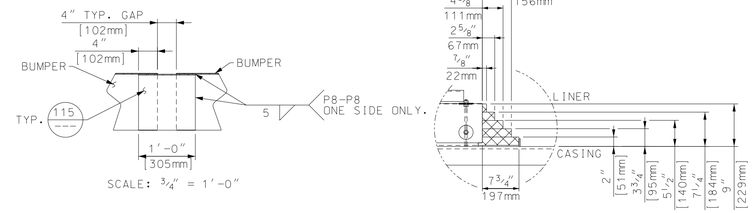

RIGHT SIDE SHOWN
LEFT SIDE OPPOSITE

SCALE: 3/4" = 1'-0"

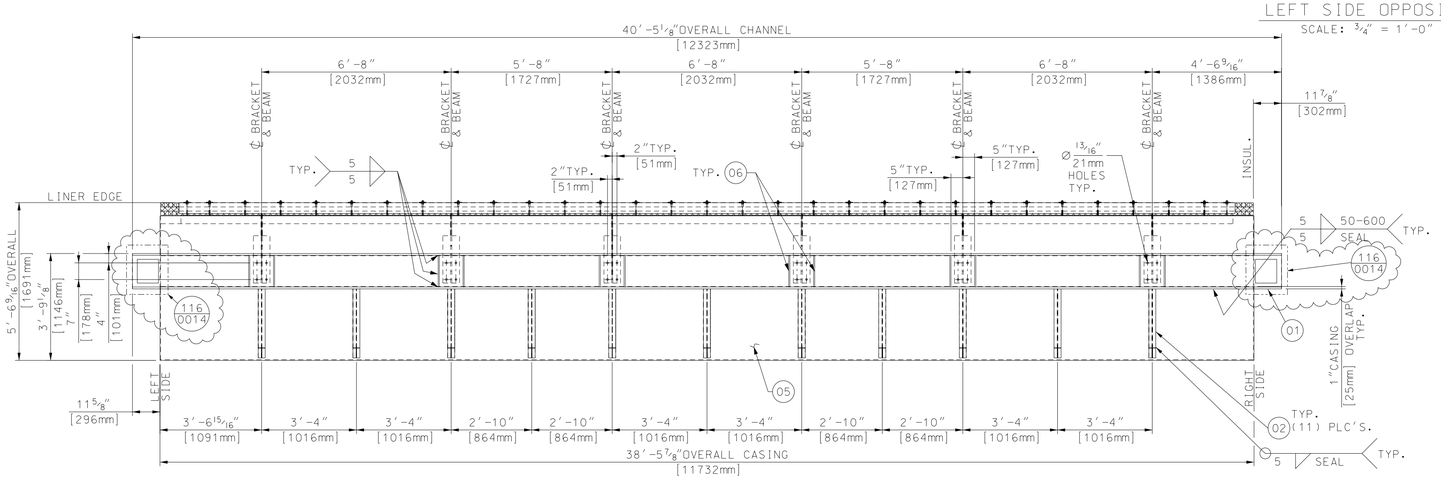

OUTSIDE VIEW

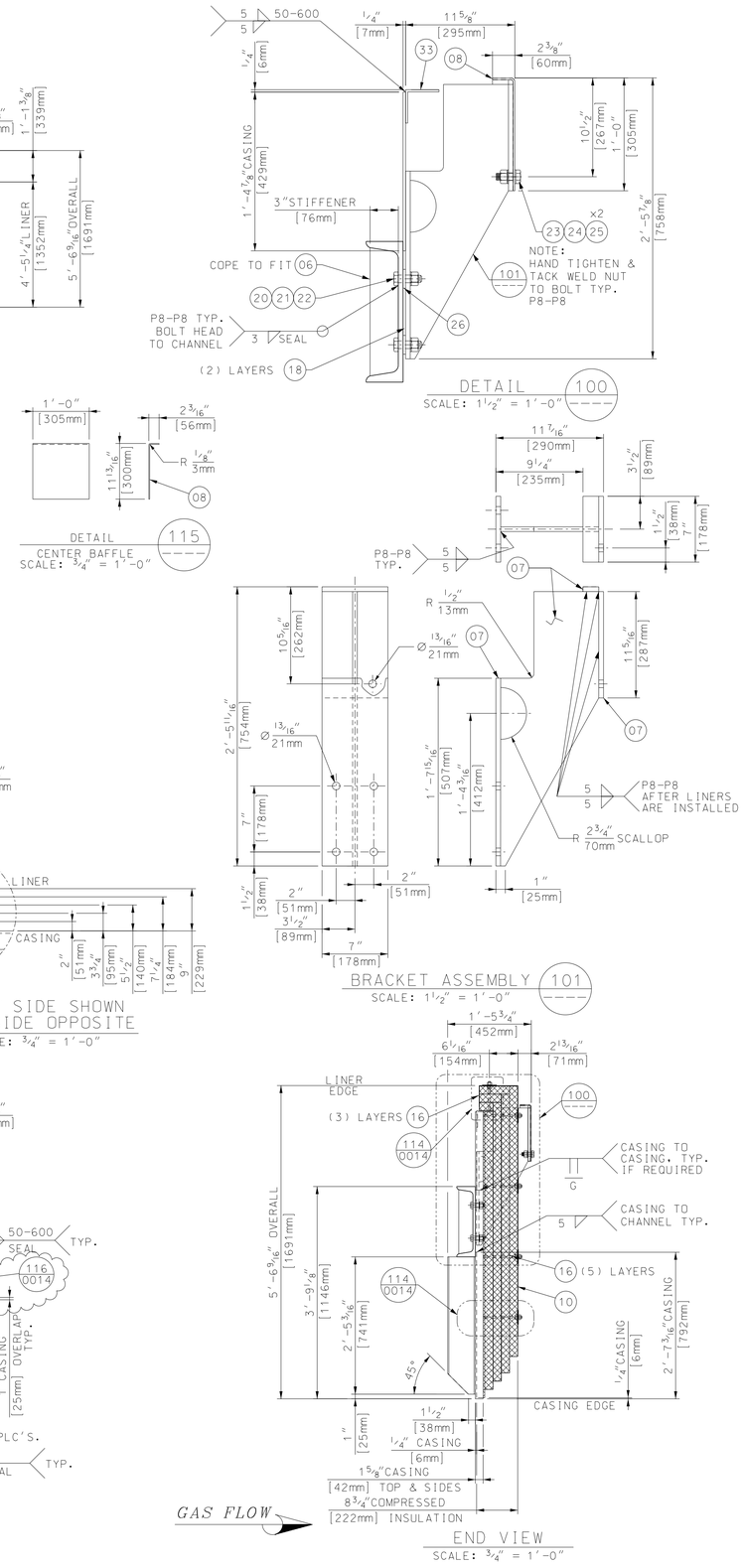

BILL OF MATERIALS

PART NO.	QTY.	DESCRIPTION	MAT'L. SPEC.
01	41	LIN. FT. OF CHANNEL, C380x100x13x20	JIS G3101 SS400
02	27	LIN. FT. OF BEAM, H150x75x5x7	JIS G3101 SS400
05	157	SQ. FT. OF PLATE 1/4" (6mm) THK.	JIS G3101 SS400
06	4	SQ. FT. OF PLATE 1/2" (13mm) THK.	JIS G3101 SS400
07	18	SQ. FT. OF PLATE 1/2" (13mm) THK.	A-240 TP304*
08	45	SQ. FT. OF PLATE 3/16" (5mm) THK.	A-240 TP304*
10	232	SQ. FT. OF SHEET, 16 GA. (1.5mm) THK.	A-240 TP309S
16	1080	SQ. FT. OF INSULATION 2" THK. 8# DENSITY	SUPERWOOL PLUS
18	12	SQ. FT. OF 1/8"(3mm)THK. PAPER INSULATION	KAOWOOL 2600
20	24	HEAVY HEX HEAD BOLT 3/4" DIA. (M20) x 2 1/2" LG.	A-193M B7
21	24	HEAVY HEX NUT 3/4" DIA. (M20)	A-194M Gr.7
22	24	WASHER 3/4" DIA. (M20)	TP409SS
23	6	HEAVY HEX HEAD BOLT 3/4" DIA. (M20) x 2" LG.	A-193M B8
24	6	HEAVY HEX NUT 3/4" DIA. (M20)	A-194M Gr.8
25	12	WASHER 3/4" DIA. (M20)	TP409SS
26	24	WASHER 1/4" (6mm) THK. 2" SQ. x 7/8" I.D. HOLE	JIS G3101 SS400
33	38	LIN. FT. OF ANGLE L90x90x6	SS400

PART NUMBERS ARE TO HAVE THE PREFIX OF "CC". FOR EXAMPLE. "30"(ASSY.) + "01" (PART NUMBER) WOULD BE "CC3001".

GENERAL NOTES:

1. ALL C.S. WELDING TO BE IN ACCORDANCE WITH LATEST STANDARDS OF AWS STANDARD D1.1 USING E70XX ELECTRODES.
2. ALL S.S. WELDING TO BE IN ACCORDANCE WITH LATEST EDITION OF AWS STANDARD D1.6 STRUCTURAL WELDING CODE.
3. SEAL WELD ALL STRUCTURAL MEMBERS TO CASING AND TO EACH OTHER GAS TIGHT.
4. ALL STEEL WORK SHALL COMPLY WITH THE AISC SPECIFICATIONS FOR THE DESIGN, FABRICATION, AND ERECTION OF STRUCTURAL STEEL.
5. PROVIDE A 3/4" DIA. DRAIN HOLE IN STRUCTURALS WHERE NECESSARY TO ENSURE WATER DRAINAGE DURING SHIPMENT AND AFTER ERECTION.
6. ALL BOLT HOLES ARE TO BE PUNCHED OR DRILLED.
7. ALL INSULATION TO BE COMPRESSED APPROX. 1/8" PER 1" TO GIVEN THICKNESS.
8. SEE V17494-DWNC-0001 FOR "EQUIPMENT SPECIFICATION FOR SHOP FABRICATED INTERNALLY INSULATED DUCTWORK".
9. APPROXIMATE ASSEMBLY WEIGHT PER ASSEMBLY: 6887 LBS. (3123 KG.)
10. QUANTITIES SHOWN ARE FOR (1) ONE UNIT: (1)ONE UNIT REQUIRED FOR MIDDLETOWN PROJECT (1)ONE UNIT REQUIRED FOR KINGS MOUNTAIN PROJECT
11. ALL WELD SIZES ARE SHOWN IN METRIC (mm).
12. ALL WELDS ARE P1-P1 UNLESS NOTED OTHERWISE.
13. 304* DENOTES 304H SS OR 304 SS WITH A MINIMUM CARBON CONTENT OF 0.04%.

REFERENCE DRAWINGS:

V17494-CCND-0014 - BASEMENT PANEL DETAILS BOX 1 THRU BOX 2 AND BOX 5
V17494-EBND-0102 - STANDARD FABRICATION TOLERANCES FOR ATTIC & BASEMENT PANEL ASS'Y.

Rev.	Description	Date	Drawn	Chkd. 1	Chkd. 2	Appr.
01	ADDED WELD ACCESS WINDOW PER CLIENT REQUEST	11-MAY-16	DR	REEVES		FRY
00	FIRST ISSUE	18-JAN-16	LTTS	DLN		FRY

Revisions

This drawing contains Vogt Power International's confidential and proprietary information and cannot be used, duplicated or disclosed in whole or in part, except with the express written permission of Vogt Power International EXCEPT AS EXPRESSLY STATED IN ANY WRITTEN CONTRACT - ALL WARRANTIES RELATING TO THIS DRAWING, INCLUDING THE WARRANTIES OF MERCHANTABILITY AND FITNESS, ARE DISCLAIMED.
©Vogt Power International, Inc. all rights reserved as an unpublished work.

MIDDLETOWN ENERGY CENTER
and
KINGS MOUNTAIN ENERGY CENTER
for
NTE ENERGY and GEMMA POWER SYSTEMS
VOGT POWER PROJECTS V17494 & V17495

3rd ANGLE PROJECTION

Scale: 3/8" = 1'-0"

Title
BASEMENT PANEL ASSEMBLY
INLET BOX 2 (CC21)

Vogt Power International
13551 Triton Park Blvd
Suite 2000
Louisville, Ky. 40223 USA
www.VogtPower.com

Internal Drawing Status	Size	Drawing No.	Rev.
FOR RECORD	D	V17494-CCND-0012	01