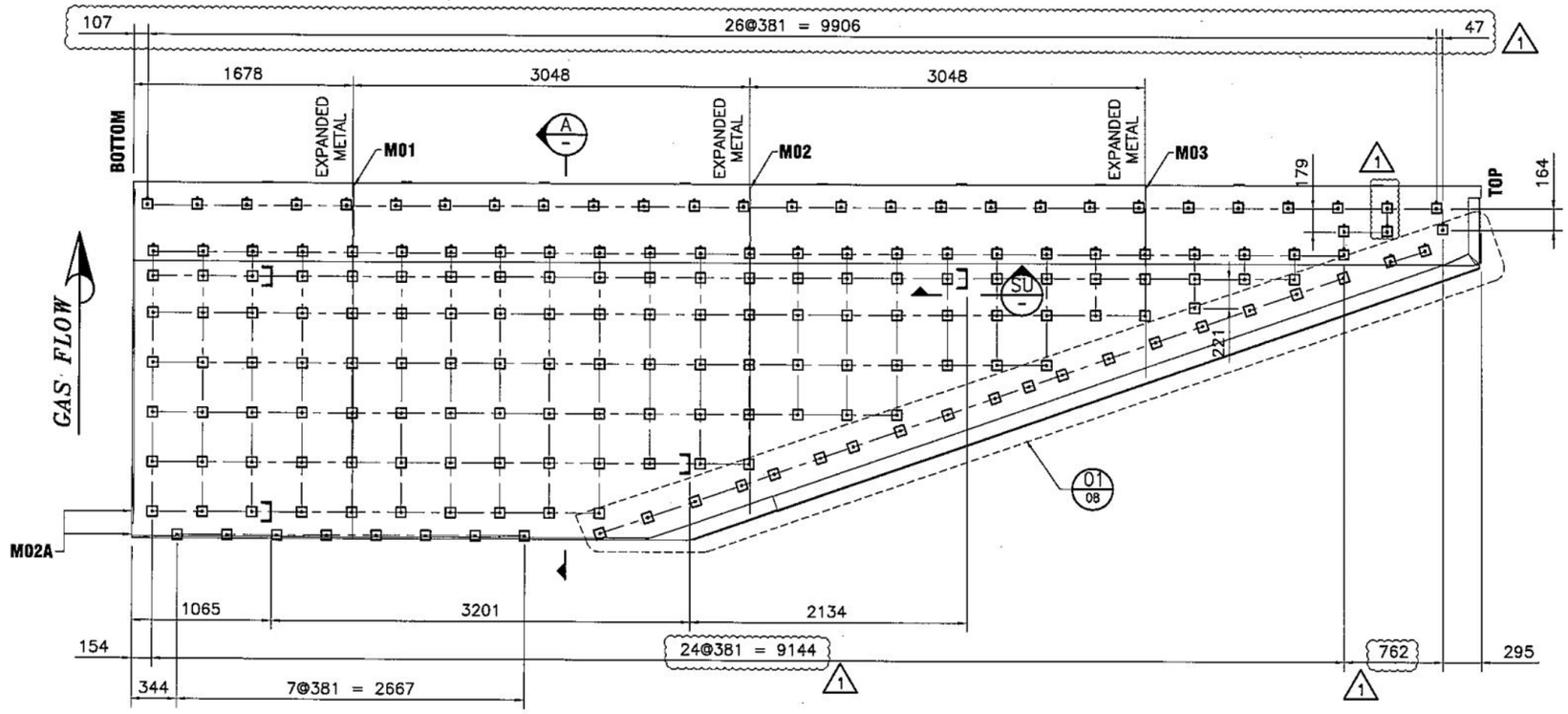

DWID-R5

RIGHT PANEL STUDS LAYOUT

(LOOKING FROM INSIDE LINER VIEW)

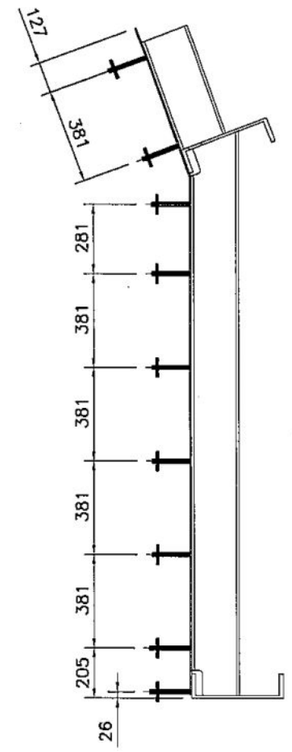

SECTION A

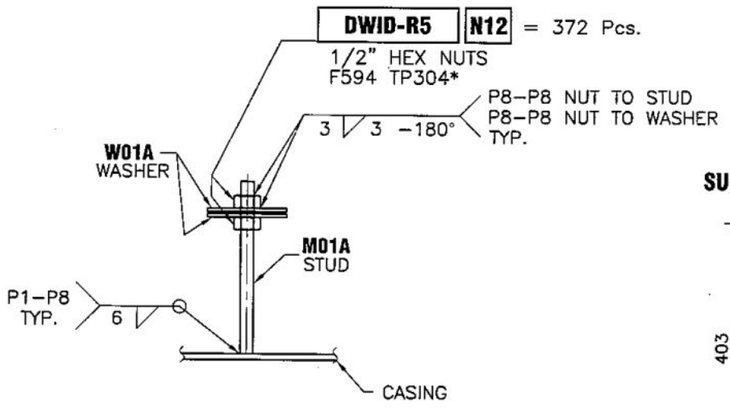

TYPICAL FOR STUD

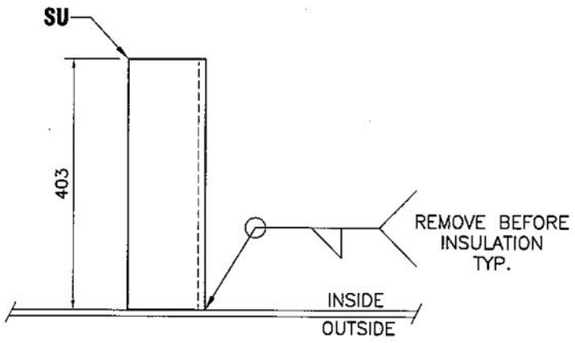

SECTION SU

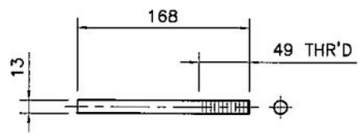

DWID-R5 M02A = 20 Pcs.

STUD 1/2" 13 UNC T.P.I.
A–479 TP304*

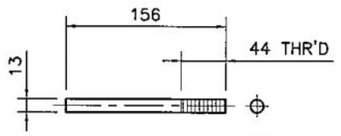

DWID-R5 M01A = 167 Pcs. (1)

STUD 1/2" 13 UNC T.P.I.
A–479 TP304*

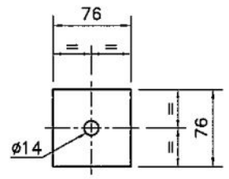

DWID-R5 W01A = 374 Pcs. (1)

WASHER PL–3mm.
A–240 TP409

This drawing contains Visavakit Patana Corp., Ltd.'s confidential and proprietary information and cannot be used, duplicated or disclosed in whole or in part, except with the express written permission of Visavakit Patana Corp., ltd.

© Visavakit Patana Corp., Ltd. all rights reserved as an unpublished work.

VISAVAKIT PATANA CORPORATION LIMITED
OFFICE :215/148-149 Prachachard 1 Road, Bangsue, Bangkok 10800 Tel: 0-2585-2556-8 Fax: 0-2587-6068
PLANT 1 :28/2 Moo4, Soi Chai Ua, Pathumthani 12000 Tel: 0-2975-2811-4 Fax: 0-2975-2815
PLANT 2 :52 Moo7, Kubangkuang, Ladlumkaew, Pathumthani 12140 Tel: 0-2979-4001-9 Fax: 0-2979-4010
www.vipco-thai.com Email : vipco@vipco-thai.com

TITLE

VOGT POWER INTERNATIONAL
MIDDLETOWN ENERGY CENTER PROJECT
INLET DUCT (LINER)
RIGHT SIDE PANEL

ISO-A (3rd)

JOB NO. 1711

REF.DWG.NO. Y15-1711-E0101~E0104

VIPCO DWG.NO. Y15-1711-DWID-R5-07

REV 1

REV.	DATE	DESCRIPTION	DRAWN	CHECKED	APPROVED
1	25/02/16	PES VPI DESING(DWG.V17494-DWND-0010 Rev.3)	S.KOSIN		
0	29/01/16	FIRST ISSUE	S.KOSIN		

VOGT POWER INTERNATIONAL
V17494-DWXD-7390-01
22-Mar-2016

VOGT POWER INTERNATIONAL
Review Waived
Bell, Milton Mar-29-2016

PLOTTING DATE & TIME 27 Feb 2016 – 11:17am | FILE LOCATION Acad-X:\1711_VPI 17494_NPP_Middle Town\Shop dwg\1.1_INLET DUCT\LINER\Y15-1711- DWID-R5_Rev.3.dwg

A3