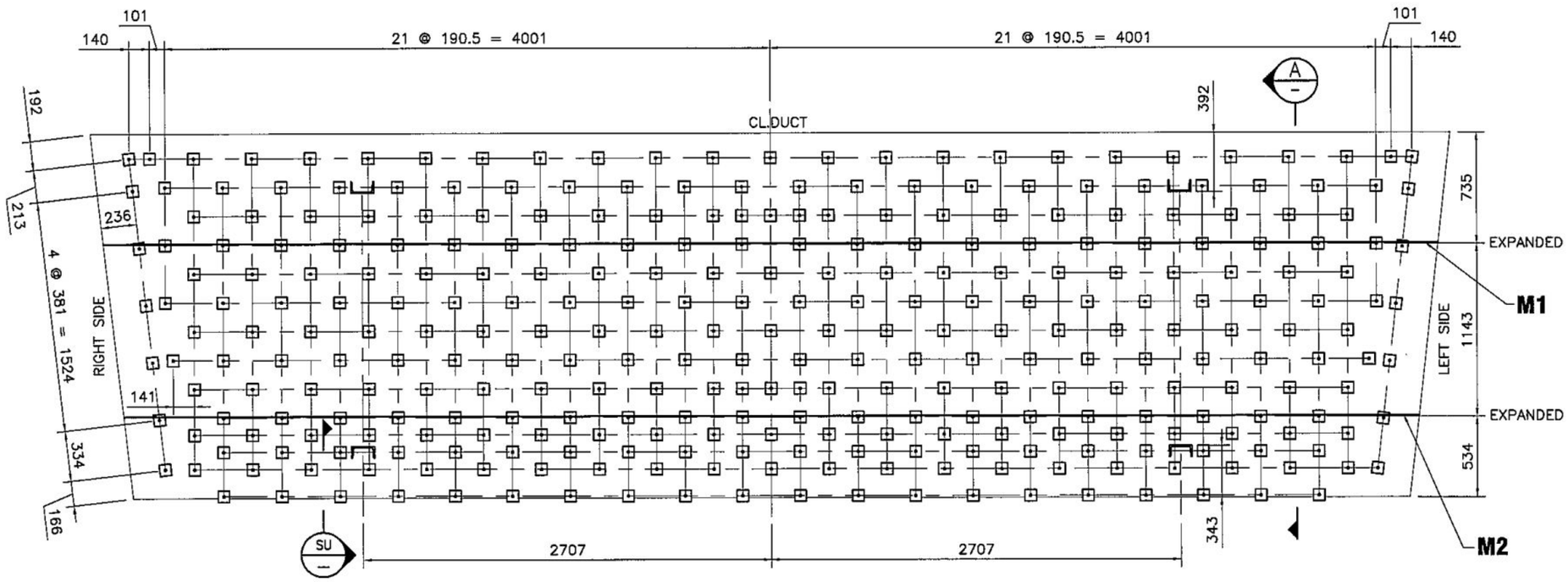

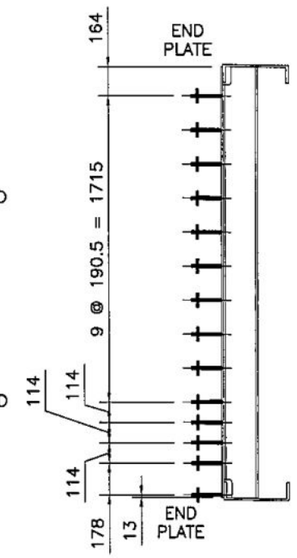

SECTION A

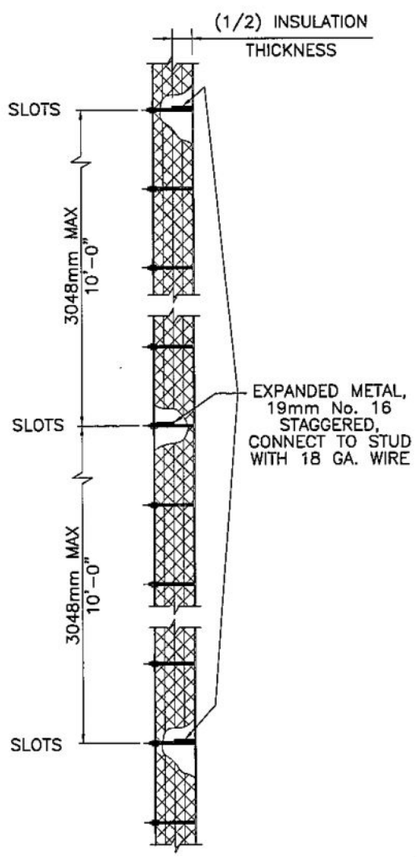

TYPICAL EXPANDED METAL LOCATIONS

FOR DUCTWORK SIDE WALLS & ROOF SLOPES OVER 30°

GAS FLOW

DWID-T4

TOP PANEL STUDS LAYOUT

(LOOKING FROM INSIDE LINER VIEW)

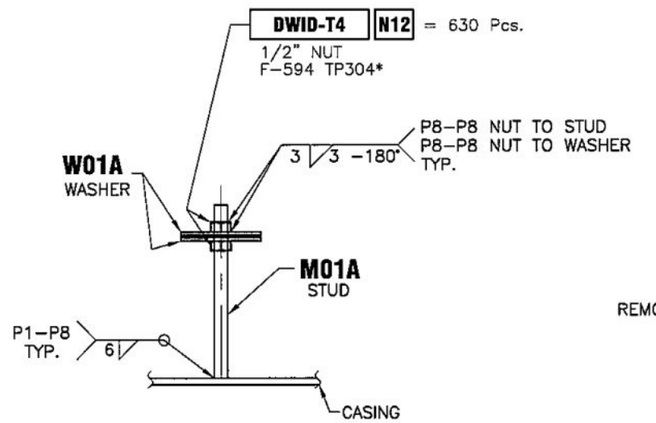

TYPICAL FOR STUD

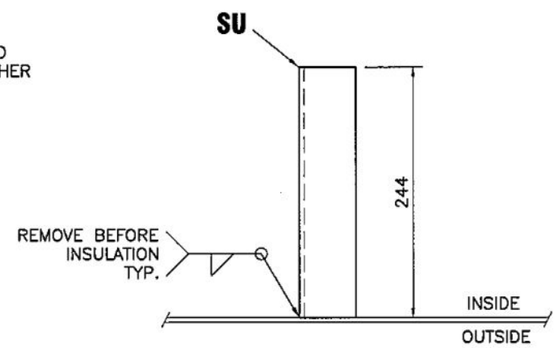

SECTION SU

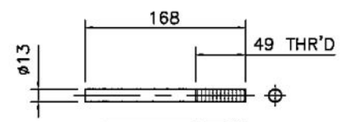

DWID-T4 M01A = 315 Pcs.
STUD 1/2" 13 UNC T.P.I.
A-479 TP304*

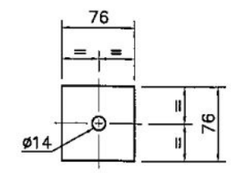

DWID-T4 W01A = 630 Pcs.
WASHER PL-3 mm.
A-240 TP409

VOGT POWER INTERNATIONAL	
Released, Work May Proceed	
Bell, Milton	Feb-16-2016

VOGT POWER INTERNATIONAL
V17494-DWXD-7267-00
29-Jan-2016

This drawing contains Visavakit Patana Corp., Ltd.'s confidential and proprietary information and cannot be used, duplicated or disclosed in whole or in part, except with the express written permission of Visavakit Patana Corp., ltd.

© Visavakit Patana Corp., Ltd. all rights reserved as an unpublished work.

VISAVAKIT PATANA CORPORATION LIMITED
OFFICE :215/148-149 Prachacad 1 Road, Bangsue, Bangkok 10800 Tel: 0-2585-2556-8 Fax: 0-2587-6068
PLANT 1 :28/2 Moo4, Soi Chai Ua, Pathumthani 12000 Tel: 0-2975-2811-4 Fax: 0-2975-2815
PLANT 2 :52 Moo7, Kubangluang, Lodlumkaew, Pathumthani 12140 Tel: 0-2979-4001-9 Fax: 0-2979-4010
www.vipco-thai.com Email : vipco@vipco-thai.com

TITLE
VOGT POWER INTERNATIONAL
MIDDLETOWN ENERGY CENTER PROJECT
INLET DUCT (LINER)
TOP PANEL

ISO-A (3rd)
JOB NO. 1711

REV.	DATE	DESCRIPTION	DRAWN	CHECKED	APPROVED
0	20/01/16	FIRST ISSUE	S.KOSIN		

REF.DWG.NO. Y15-1711-E0101~E0104
VIPCO DWG.NO. Y15-1711-DWID-T4-05
REV 0

PLOTTING DATE & TIME | 27 Jan 2016 - 10:43am | FILE LOCATION | Acad-X:\1711_VPI 17494_NPP_Middle Town\Shop dwg\1.1_INLET DUCT\LINER\Y15-1711- DWID-T4-01 - Rev.0.dwg

A3