VOGT POWER INTERNATIONAL
Released for May Proceed
Bell, Milton | Apr-15-2016

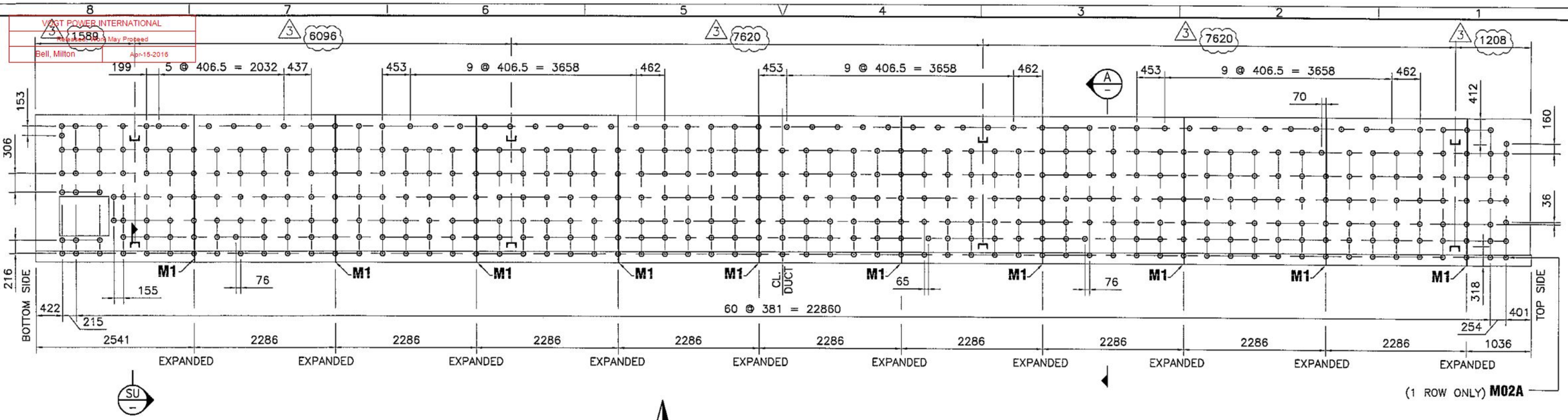

GAS FLOW

DWCO/SCR-R1

RIGHT PANEL STUDS LAYOUT

(LOOKING FROM INSIDE LINER VIEW)

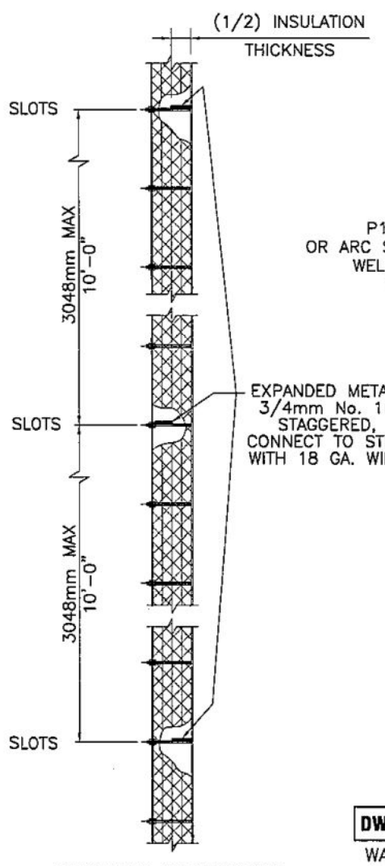

TYPICAL EXPANDED METAL LOCATIONS

FOR DUCTWORK SIDE WALLS & ROOF SLOPES OVER 30°

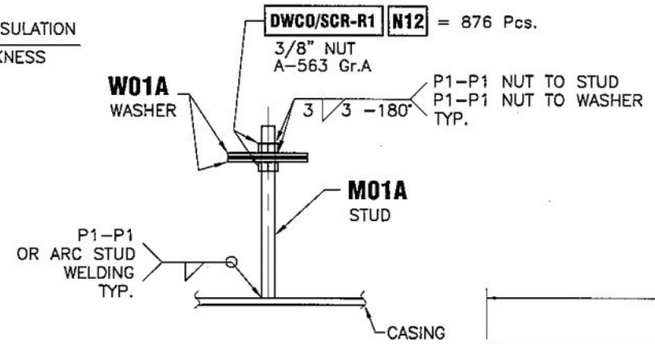

TYPICAL FOR STUD

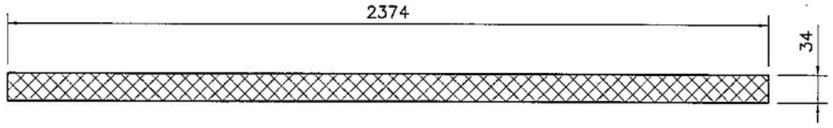

DWCO/SCR-R1 M1 = 10 Pcs.
EXPANDED METAL. 3/4" NO.16 CS.GALV

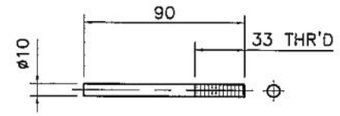

DWCO/SCR-R1 M01A = 375 Pcs.
STUD 3/8"-16 UNC T.P.I.
A-108 TP 1010

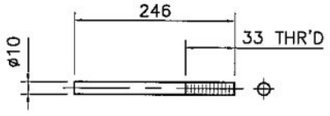

DWCO/SCR-R1 M02A = 63 Pcs.
STUD 3/8"-16 UNC T.P.I.
A-108 TP 1010

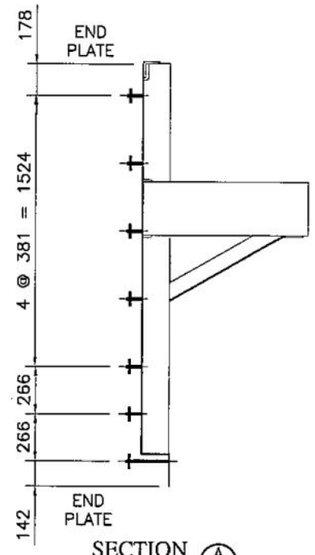

SECTION A

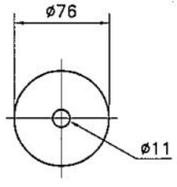

DWCO/SCR-R1 W01A = 876 Pcs.
WASHER PL-3 mm.
A-1011

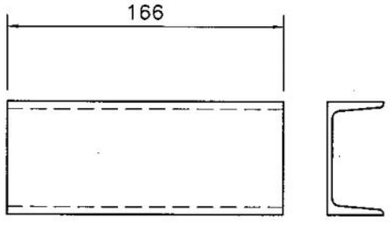

DWCO/SCR-R1 SU = 8 Pcs.
C-150x75x6.5x10
G3101 SS400

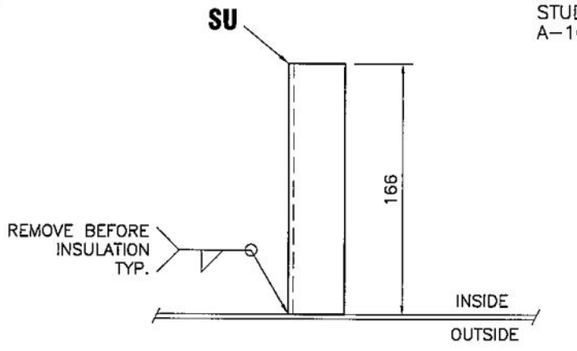

SECTION SU

VOGT POWER INTERNATIONAL
V17494-DWXD-7548-01
26-Mar-2016

REV.	DATE	DESCRIPTION	DRAWN	CHECKED	APPROVED
3	24/03/16	CHANGE DIM.	S.KOSIN	chatchai	
2	15/03/16	CHANGE Dimension & PART No.	S.KOSIN	ๆ	
1	05/03/16	CHANGE Q'ty – LENGTH	S.KOSIN	ๆ	
0	29/02/16	FIRST ISSUE	S.KOSIN	ๆ	

This drawing contains Visavakit Patana Corp., Ltd.'s confidential and proprietary information and cannot be used, duplicated or disclosed in whole or in part, except with the express written permission of Visavakit Patana Corp., ltd.
© Visavakit Patana Corp., Ltd. all rights reserved as an unpublished work.

VISAVAKIT PATANA CORPORATION LIMITED
OFFICE :215/148-149 Pracharad 1 Road, Bangsue, Bangkok 10800 Tel: 0-2585-2556-8 Fax: 0-2587-6068
PLANT 1 :28/2 Moo4, Soi Chai Ua, Pathumthani 12000 Tel: 0-2975-2811-4 Fax: 0-2975-2815
PLANT 2 :52 Moo7, Kubangluang, Ladlumkaew, Pathumthani 12140 Tel: 0-2979-4001-9 Fax: 0-2979-4010
www.vipco-thai.com Email : vipco@vipco-thai.com

TITLE
VOGT POWER INTERNATIONAL
MIDDLETOWN ENERGY CENTER PROJECT
CO/SCR DUCT (LINER)
RIGHT SIDE PANEL

ISO-A (3rd)
JOB NO. 1711

REF.DWG.NO. Y15-1711-E0201~E0203
VIPCO DWG.NO. Y15-1711-DWCO/SCR-R1-07
REV 3

PLOTTING DATE & TIME | 24 Mar 2016 – 8:28am | FILE LOCATION | Acad-X:\1711_VPI 17494_NPP_Middle Town\Shop dwg\3_CO & SCR DUCT\LINER\Y15-1711- DWCO-SCR-R1 – Rev.2.dwg

A3