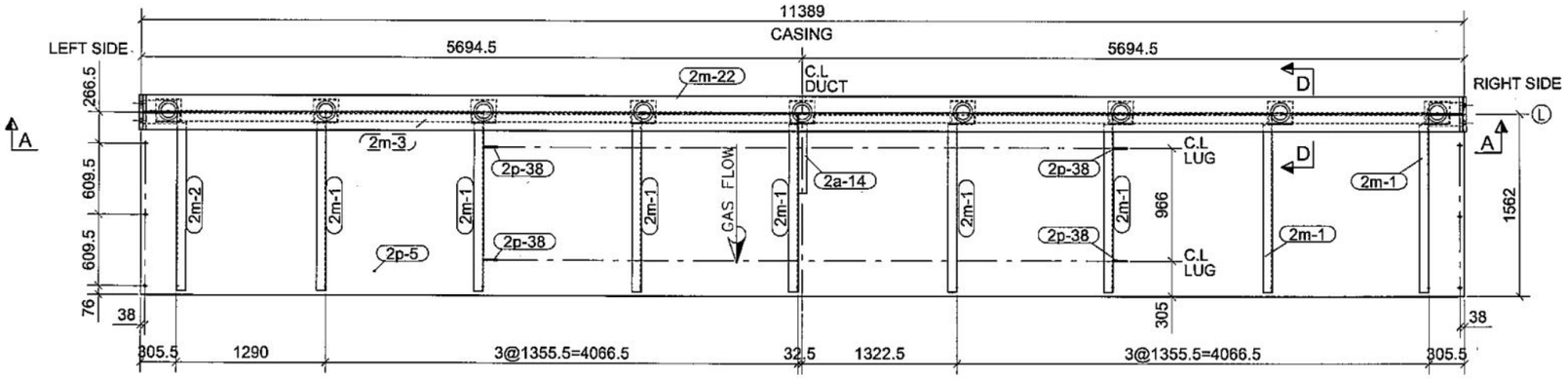

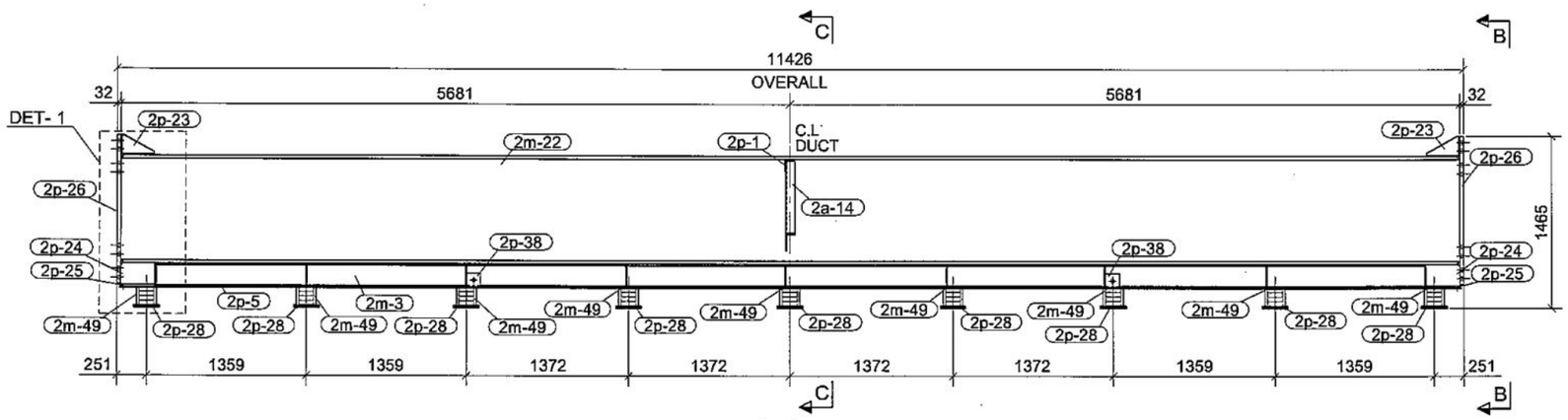

A - A

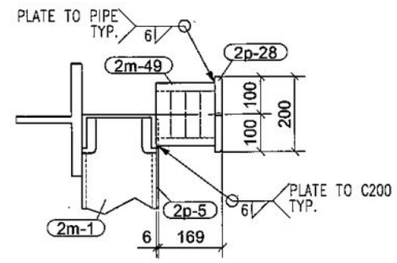

D - D

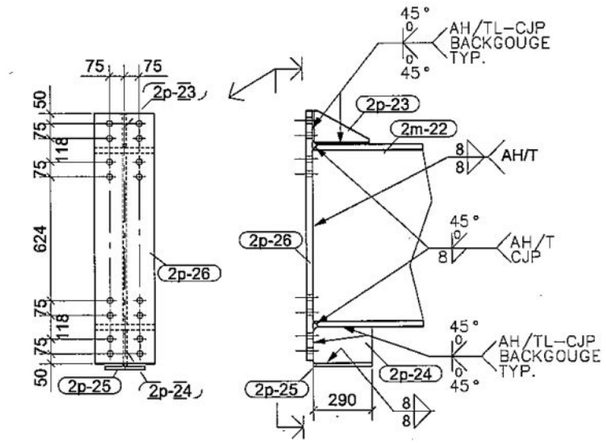

DETAIL- 1

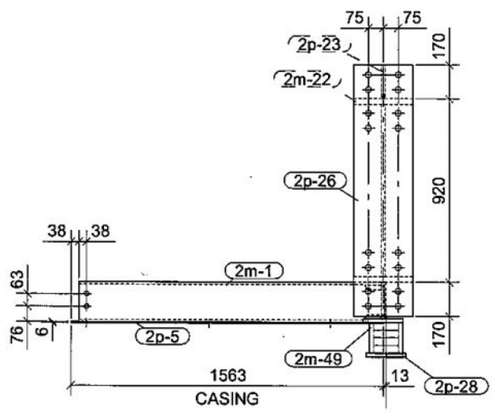

B - B

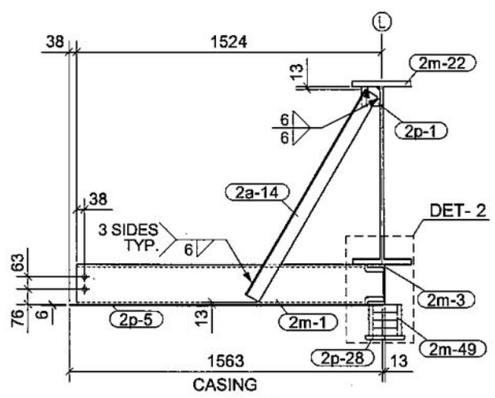

C - C

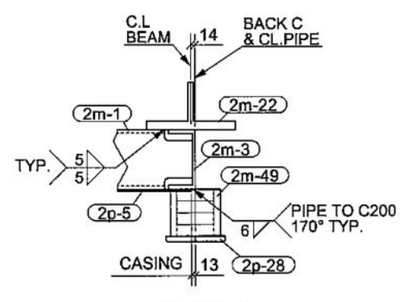

DETAIL- 2

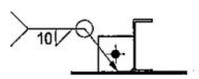

TYP. LIFTING LUG.

NOTE : THIS STIFFENER IS USE FOR SHOP HANDLING PURPOSED ONLY

This drawing contains Visavakit Patana Corp., Ltd.'s confidential and proprietary information and cannot be used, duplicated or disclosed in whole or in part, except with the express written permission of Visavakit Patana Corp., Ltd.

© Visavakit Patana Corp., Ltd. all rights reserved as an unpublished work.

VISAVAKIT PATANA CORPORATION LIMITED
OFFICE : 215/148-149 Prachard 1 Road , Bangkok 10800 Tel. : 0-2585-2556-8 Fax : 0-2587-6068
PLANT 1 : 28/2 Moo 4 , Soi Chai Uo , Pathumthani 12000 Tel.:0-2975-2811-4 Fax: 0-2975-2815
PLANT 2 : 52 Moo7 , Kubangluang , Ladlumkaew , Pathumthani 12140 Tel.:0-2979-4001-9 Fax: 0-2979-4010
www.vipco-thai.com Email : vipco@vipco-thai.com

VOGT POWER INTERNATIONAL
V17494-DWXD-7332-00
16-Feb-2016

VOGT POWER INTERNATIONAL
Released, Work May Proceed
Bell, Milton | Feb-23-2016

REV.	DATE.	DESCRIPTION	DRAWN	CHKD.	APPROD.
0	03/02/20	FIRST ISSUE	S.Kitsana	Chatchai	

TITLE: VOGT POWER INTERNATIONAL
MIDDLETOWN ENERGY CENTER PROJECT
CO / SCR DUCT (CASING)
BOTTOM PANEL

ISO-A (pre)

JOB NO. 1711

REF.DWG.NO. Y15-1711-E0201~E0203

VIPCO DWG.NO. Y15-1711- DWCO/SCR-B3-02

REV. 0