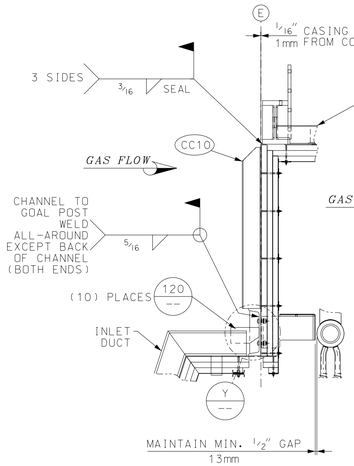

DETAIL H 0001
INLET DUCT TO INLET BOX 1 TOP

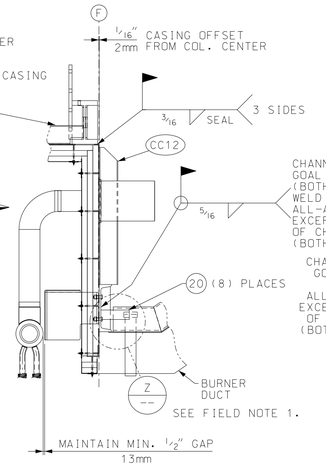

DETAIL J 0001
OUTLET BOX 1 TO BURNER DUCT TOP

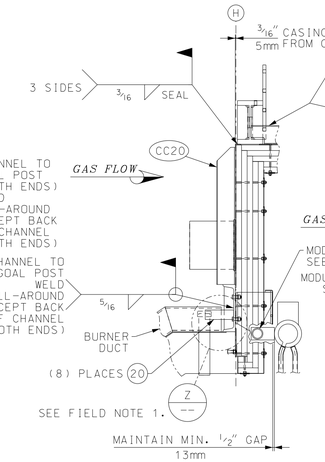

DETAIL K 0001
BURNER DUCT TO BOX 2 INLET TOP

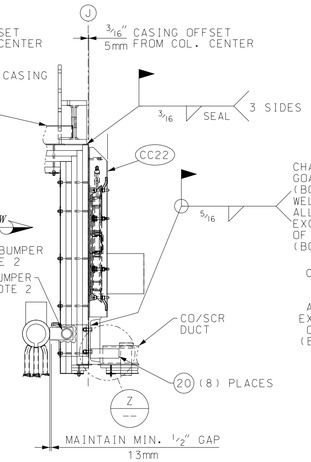

DETAIL L 0001
BOX 2 OUTLET TO CO/SCR DUCT TOP

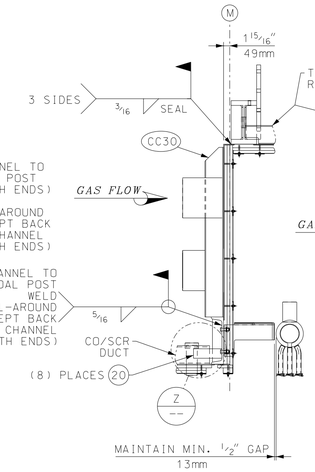

DETAIL M 0001
CO/SCR DUCT TO BOX 3 INLET TOP

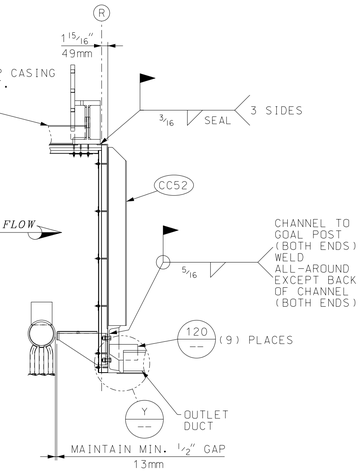

DETAIL N 0001
BOX 5 OUTLET TO OUTLET DUCT TOP

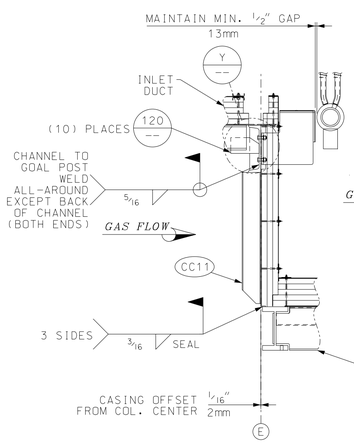

DETAIL P 0001
INLET DUCT TO INLET BOX 1 BOTTOM

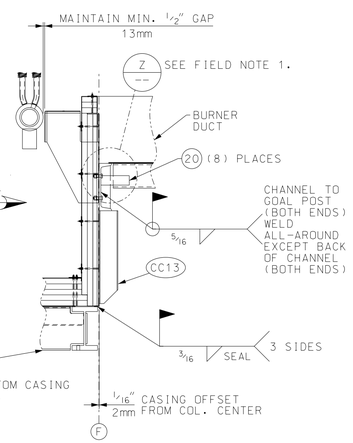

DETAIL Q 0001
BOX 1 OUTLET TO BURNER DUCT BOTTOM

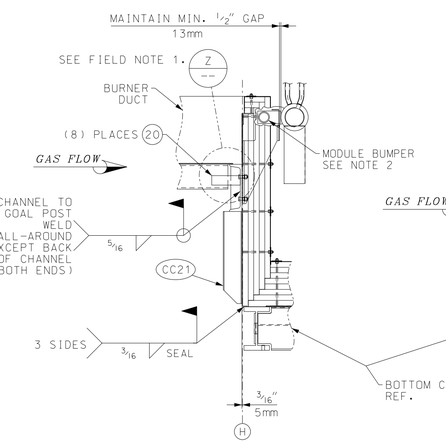

DETAIL R 0001
BURNER DUCT TO BOX 2 INLET BOTTOM

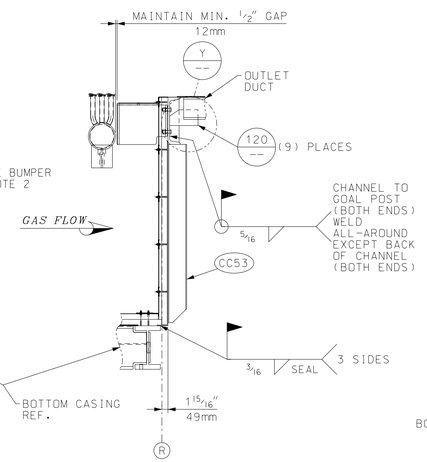

DETAIL S 0001
BOX 5 OUTLET TO OUTLET DUCT BOTTOM

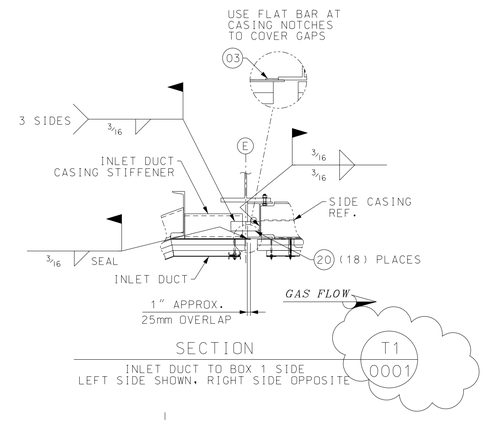

SECTION T1 0001
INLET DUCT TO BOX 1 SIDE
LEFT SIDE SHOWN. RIGHT SIDE OPPOSITE

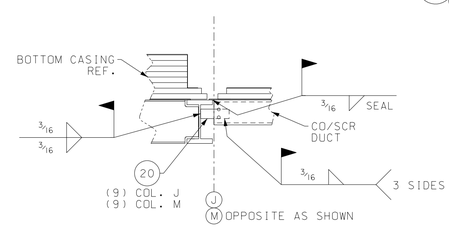

DETAIL L.1 0001
BOX 2 OUTLET TO CO/SCR DUCT. BOTTOM BOX 3 INLET SIMILAR AT COL. M

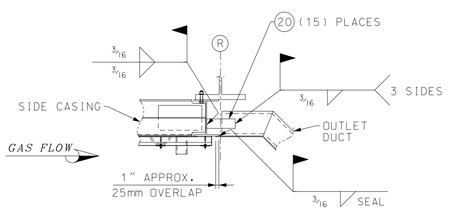

SECTION U 0001
BOX 5 OUTLET TO OUTLET DUCT SIDE
LEFT SIDE SHOWN. RIGHT SIDE OPPOSITE

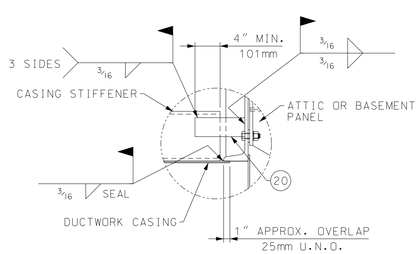

DETAIL Z --
TYPICAL CASING TO ATTIC/BASEMENT PANEL CONNECTION
ATTICS SHOWN. BASEMENTS OPPOSITE
SCALE: 1" = 1'-0"

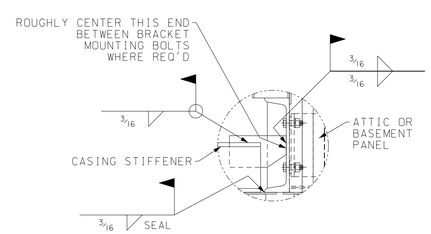

DETAIL Y --
TYPICAL CASING TO ATTIC/BASEMENT INLET AND OUTLET PANEL CONNECTION
ATTICS SHOWN. BASEMENTS OPPOSITE
SCALE: 1" = 1'-0"

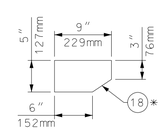

DETAIL 120 --
INLET DUCT TO BOX 1 AND BOX 5 TO OUTLET TOP & BOTTOM
(38) REQUIRED PER UNIT
SCALE: 1" = 1'-0"

GENERAL NOTES:

1. SEE DRAWING V17494-ERND-0005 FOR GENERAL NOTES AND MATERIAL LIST.
2. REMOVE BOTH LEFT AND RIGHT SIDE MODULE RESTRAINTS PRIOR TO INSTALLING FIELD CASINGS. SEE ALSO DRAWING V17494-ERND-0004 DETAIL 105 FOR REMOVAL OF LOWER BOX 2 MODULE RESTRAINTS REQUIRED PRIOR TO INSTALLATION OF BUMPER.

FIELD NOTE:

1. THE BURNER DUCT HAS AN AREA AT THE CORNERS THAT NEEDS TO BE SEALED AT THE INLET AND OUTLET. THIS AREA IS WHERE THE DUCT PANELS JOIN WITH THE ATTIC AND BASEMENT PANELS. IF SEAL WELDING FROM OUTSIDE THE CASING IS DIFFICULT TO ACHIEVE, IT IS PERMISSIBLE TO WELD FROM INSIDE THE DUCT AND TRANSITION THE WELD TO THE OUTSIDE TO SEAL THE CASING.

REFERENCE DRAWINGS:

V17494-ERND-0001 - FIELD CONNECTIONS - LOCATION MAP

V17494-ERND-0005 - FIELD CONNECTIONS - BOX & DUCT FIT-UP (ER15)

V17494-ERND-0006 - FIELD CONNECTIONS - BOX & DUCT FIT-UP (ER15)

V17494-ERND-0008 - FIELD CONNECTIONS - BOX & DUCT FIT-UP (ER15)

Rev.	Description	Date	Drawn	Chkd. 1	Chkd. 2	Appr.
01	REVISED SECTION NUMBER	28-OCT-16	DR	REEVES	-	FRY
00	INITIAL ISSUE	12-MAY-16	BML/JP	SEG	-	FRY

Revisions

This drawing contains Vogt Power International's confidential and proprietary information and cannot be used, duplicated or disclosed in whole or in part, except with the express written permission of Vogt Power International. EXCEPT AS EXPRESSLY STATED IN ANY WRITTEN CONTRACT - ALL WARRANTIES RELATING TO THIS DRAWING, INCLUDING THE WARRANTIES OF MERCHANTABILITY AND FITNESS, ARE DISCLAIMED.
©Vogt Power International, Inc. all rights reserved as an unpublished work.

MIDDLETOWN ENERGY CENTER
and
KINGS MOUNTAIN ENERGY CENTER
for
NTE ENERGY and GEMMA POWER SYSTEMS

VOGT POWER PROJECTS V17494 & V17495

3rd ANGLE PROJECTION

Scale: 1/2" = 1'-0"

Title
FIELD CONNECTIONS -
BOX & DUCT FIT-UP (ER15)

Vogt Power International
13551 Triton Park Blvd
Suite 2000
Louisville, Ky. 40223 USA
www.VogtPower.com

Internal Drawing Status	Size	Drawing No.	Rev.
FOR RECORD	D	V17494-ERND-0007	01