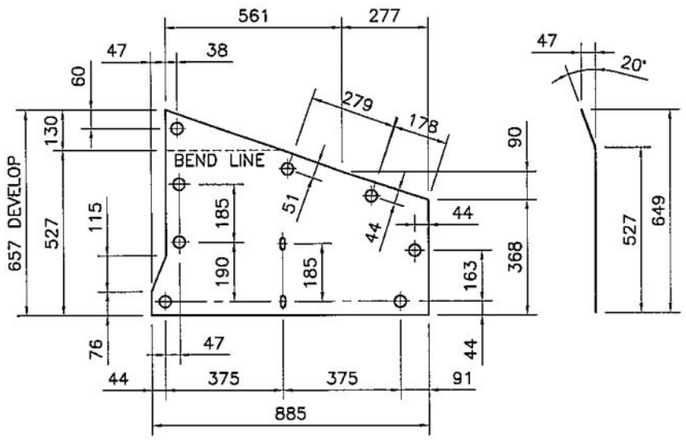

DEVELOP BY INSIDE
A = 0.42 m2

DWID-L5	21	= 1 Pc.

PL-1.5
A-240 TP409

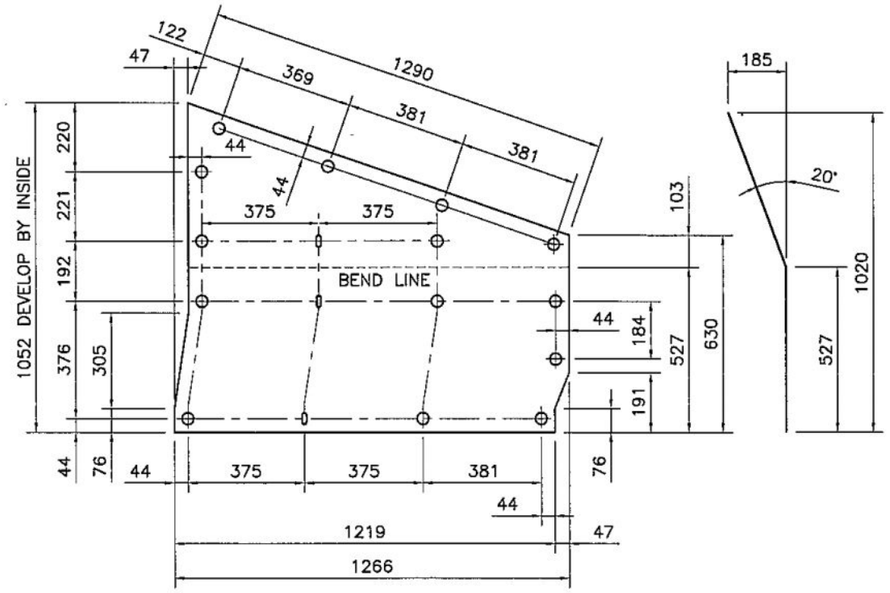

A = 1.01 m2

DWID-L5	20	= 1 Pc.

PL-1.5
A-240 TP409

3

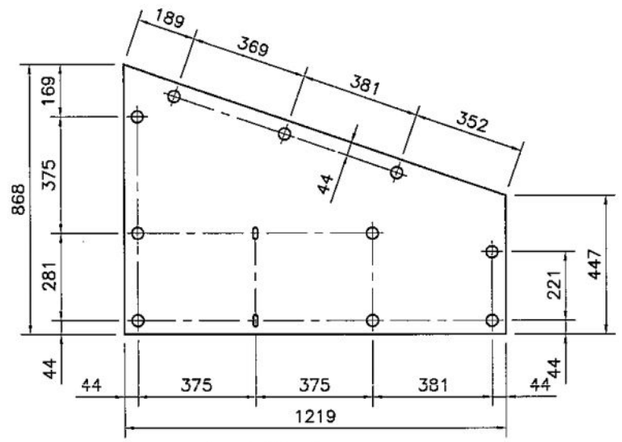

A = 0.79 m2

DWID-L5	19	= 1 Pc.

PL-1.5
A-240 TP409

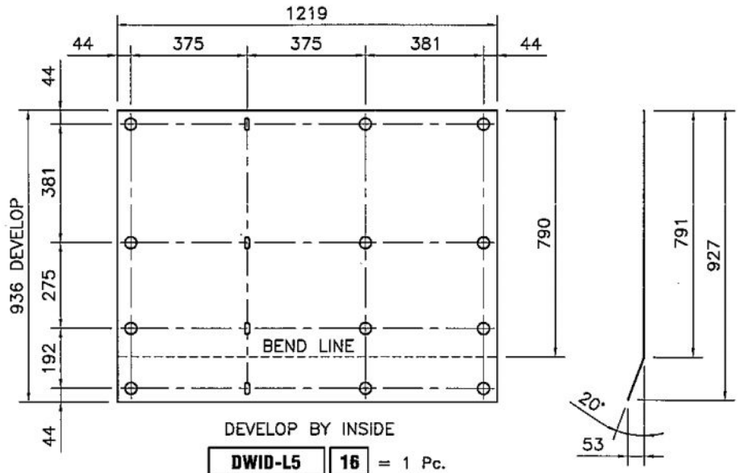

DEVELOP BY INSIDE

DWID-L5	16	= 1 Pc.
DWID-L5	11	= 1 Pc.
DWID-L5	05	= 1 Pc.

PL-1.5
A-240 TP409

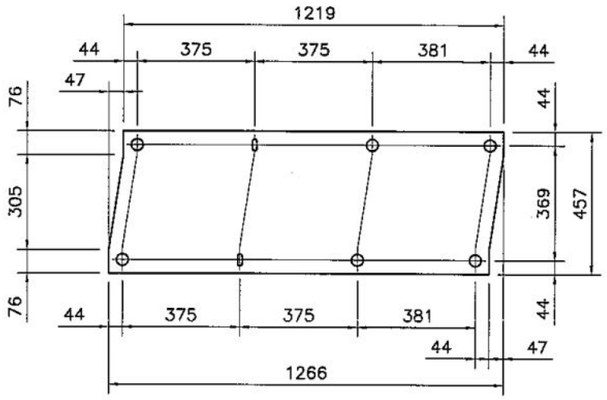

A = 0.55 m2

DWID-L5	04	= 1 Pc.
DWID-L5	10	= 1 Pc.
DWID-L5	15	= 1 Pc.

PL-1.5
A-240 TP409

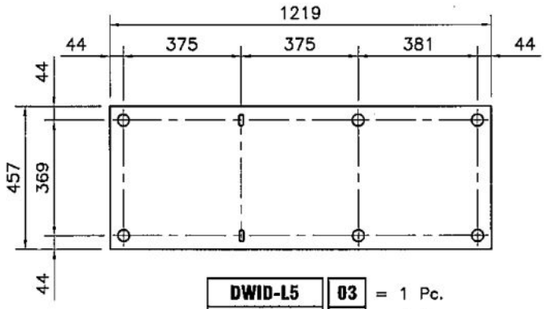

DWID-L5	03	= 1 Pc.
DWID-L5	09	= 1 Pc.

PL-1.5
A-240 TP409

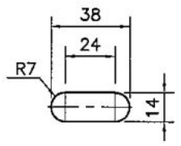

TYPICAL SLOTED HOLES

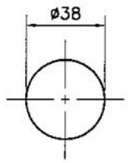

TYPICAL HOLES

VOGT POWER INTERNATIONAL
V17494-DWXD-7444-01
22-Mar-2016

VOGT POWER INTERNATIONAL	
Review Waived	
Bell, Milton	Mar-29-2016

REV.	DATE	DESCRIPTION	DRAWN	CHECKED	APPROVED
3	16/03/16	CANCEL SHOP	S.KOSIN		
2	25/02/16	PES VPI DESING(DWG.V17494-DWND-0010 Rev.3)	S.KOSIN		
1	03/02/16	CHANGE DIMENSION	S.Chanokpad		
0	26/01/16	FIRST ISSUE	S.KOSIN		

This drawing contains Visavakit Patana Corp., Ltd.'s confidential and proprietary information and cannot be used, duplicated or disclosed in whole or in part, except with the express written permission of Visavakit Patana Corp., ltd.
© Visavakit Patana Corp., Ltd. all rights reserved as an unpublished work.

VISAVAKIT PATANA CORPORATION LIMITED
OFFICE :215/148-149 Prachanod 1 Road, Bangsue, Bangkok 10800 Tel: 0-2585-2556-8 Fax: 0-2587-6068
PLANT 1 :28/2 Moo4, Soi Chai Ua, Pathumthani 12000 Tel: 0-2975-2811-4 Fax: 0-2975-2815
PLANT 2 :52 Moo7, Kubangluang, Ladlumkaew, Pathumthani 12140 Tel: 0-2979-4001-9 Fax: 0-2979-4010
www.vipco-thai.com Email : vipco@vipco-thai.com

TITLE
VOGT POWER INTERNATIONAL
MIDDLETOWN ENERGY CENTER PROJECT
INLET DUCT (LINER)
LEFT SIDE PANEL

ISO-A (3rd)
JOB NO. 1711

REF.DWG.NO. Y15-1711-E0101~E0104
VIPCO DWG.NO. Y15-1711-DWID-L5-14
REV 3