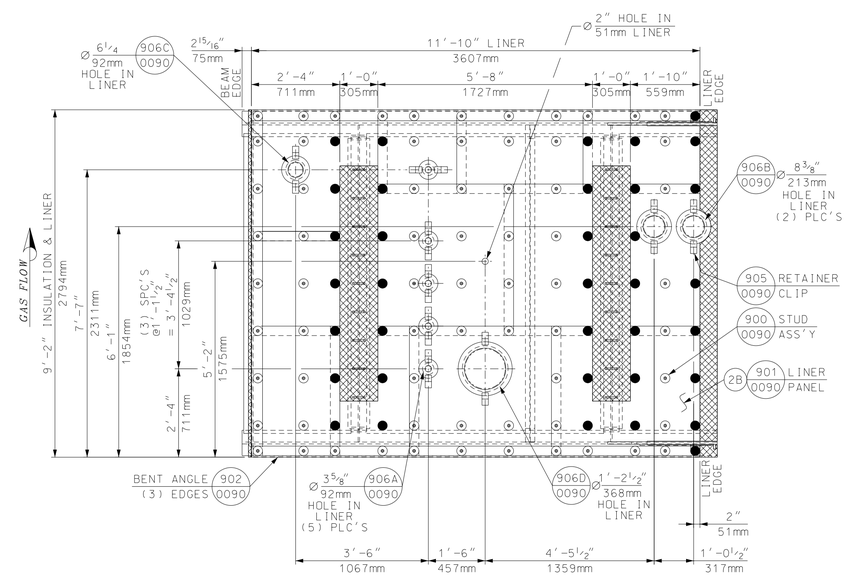


INSIDE VIEW BC40A

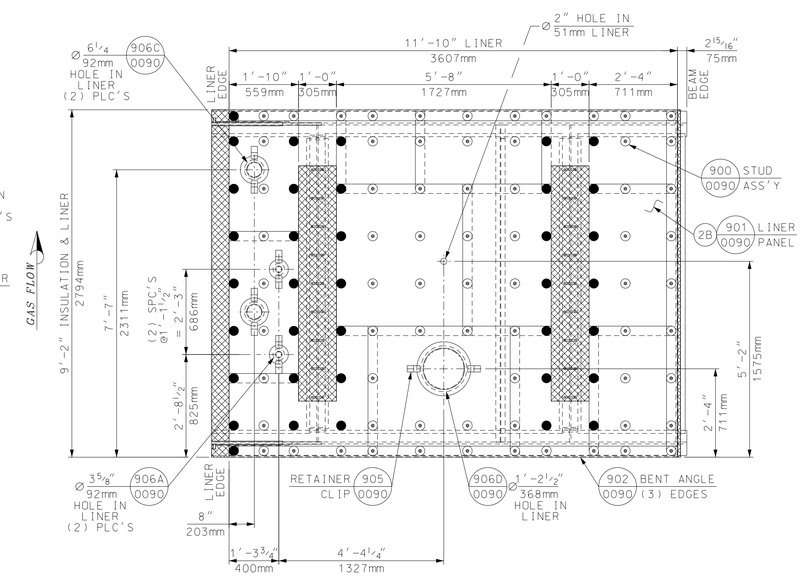


INSIDE VIEW BC40C

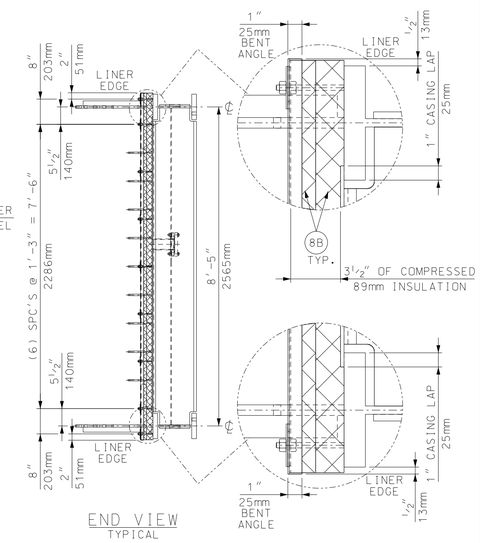


END VIEW
TYPICAL

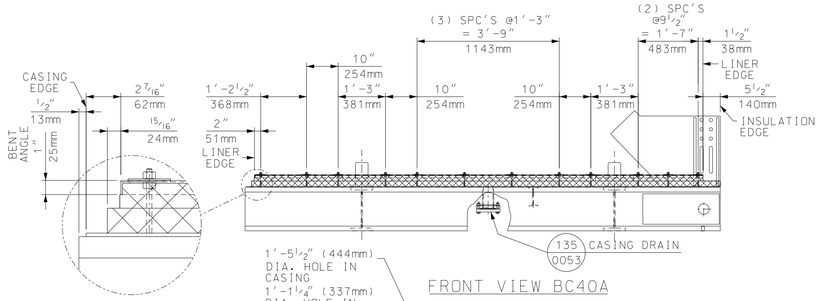


FRONT VIEW BC40A

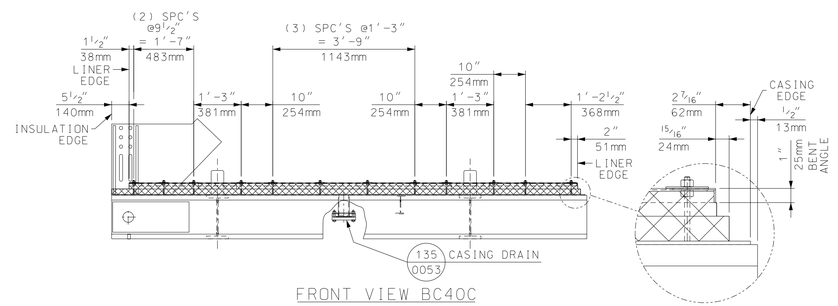


FRONT VIEW BC40C

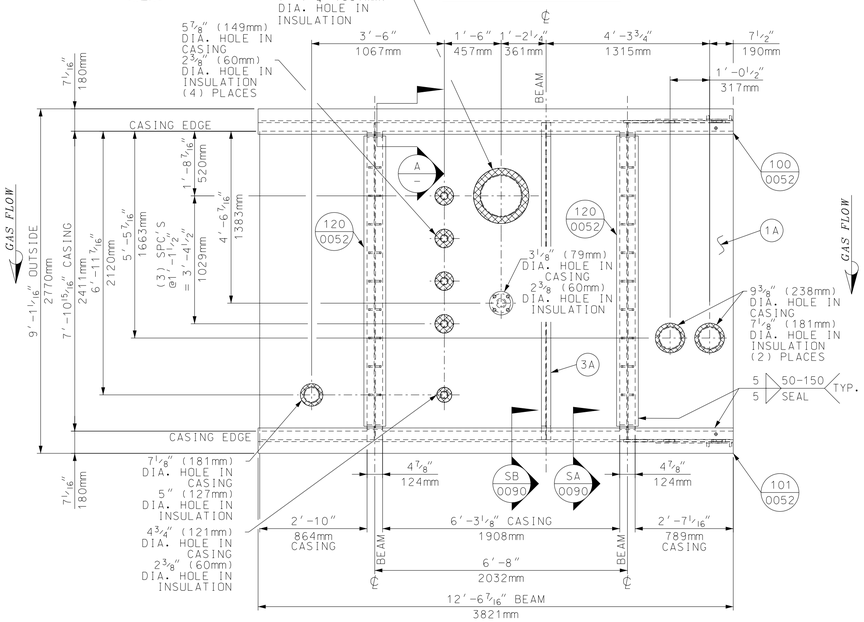


BOTTOM VIEW BC40A

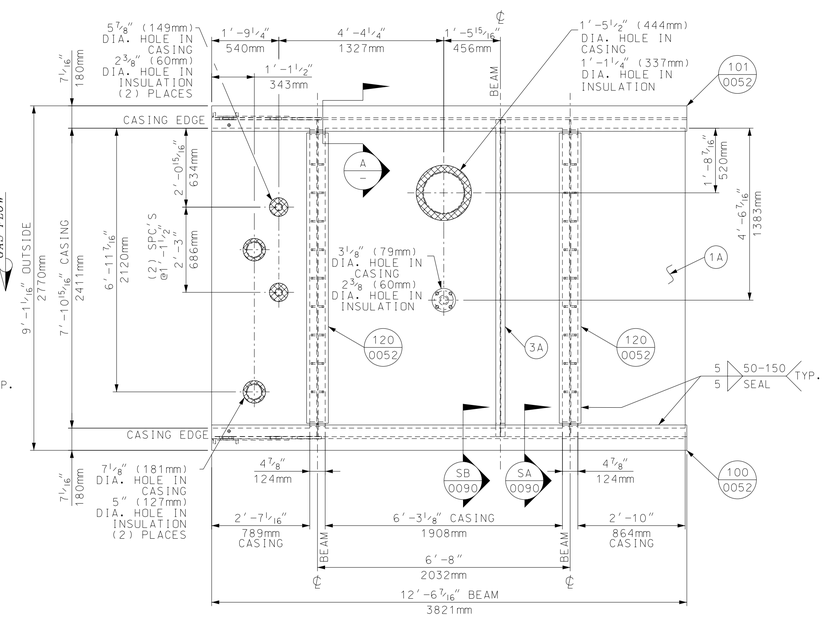


BOTTOM VIEW BC40C

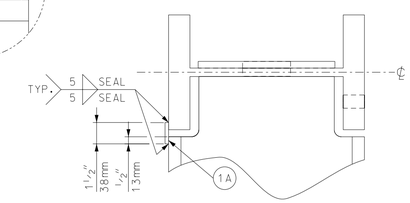


SECTION VIEW A
SCALE: 3/16"=1"

## BILL OF MATERIALS

| PART NO. | QTY. | DESCRIPTION | MAT'L. SPEC. |
|---|---|---|---|
| 1A | 185 | SQ. FT. OF PLATE. (6mm) THK | JIS G3101 SS400 |
| 2B | 240 | SQ. FT. OF SHEET. 12 GA (3mm) THK. | A-1011 CS |
| 3A | 17 | LN. FT. OF BEAM. H150x75x5x7 | JIS G3101 SS400 |
| 8B | 444 | SQ. FT. OF INSULATION. 2" THK. 8# DENSITY | SUPERWOOL PLUS |
| | | | |
| | | | |

PART NUMBERS ARE TO HAVE THE PREFIX OF "BC". FOR EXAMPLE, "40B"(ASSEMBLY) + "1A" (PART NUMBER) WOULD BE "BC40B1A"

## GENERAL NOTES:

1. SEE V17494-MANC-0001 FOR "EQUIPMENT SPECIFICATION FOR SHOP FABRICATED MODULE BOX ASSEMBLY FOR HEAT RECOVERY STREAM GENERATOR."
2. ALL STEEL WORK SHALL COMPLY WITH THE AMERICAN INSTITUTE OF STEEL FABRICATION (AISC) SPECIFICATIONS FOR THE DESIGN, FABRICATION, AND ERECTION OF STRUCTURAL STEEL.
3. PROVIDE ¾" (19mm) DIA. DRAIN HOLES IN STRUCTURALS WHERE NECESSARY TO ENSURE WATER DRAINAGE DURING SHIPMENT AND AFTER ERECTION.
4. ALL BOLT HOLES ARE TO BE PUNCHED OR DRILLED.
5. TRIM LINER & WASHERS WITH ¼" CLEARANCE AROUND BEAM LUGS AT TIME OF ASSEMBLY.
6. ALL WELDING TO BE DONE IN ACCORDANCE WITH AWS D1.1 STRUCTURAL WELDING CODE, CURRENT EDITION USING E70XX ELECTRODES. VENDOR IS RESPONSIBLE FOR THE WELD END PREPARATION OF ALL FIELD WELDS.
7. SEAL WELD ALL STRUCTURALS TO CASING AND OTHER STRUCTURALS. PRESSURE CASING TO BE SEAL WELDED GAS TIGHT.
8. ALL WELDS TO BE P1-P1 UNLESS NOTED OTHERWISE.
9. ALL INSULATION TO BE COMPRESSED APPROX. ⅛" PER 1" TO GIVEN THICKNESS.
10. ● DENOTES STUDS TO HAVE WASHER AND NUT FINGER TIGHT ONLY. DO NOT TACK WELD UNTIL AFTER FIELD LINERS AND CONNECTIONS ARE MADE IN THE FIELD.
11. TOTAL APPROX. WEIGHT:
    BC40A: 6.398 lbs. / 2.901 kg.
    BC40B: 6.098 lbs. / 2.766 kg.
    WEIGHT MAY BE GREATER IF INSULATION IS WET.
12. QUANTITIES SHOWN ARE FOR ONE (1) UNIT:
    -(1) ONE UNIT REQUIRED FOR MIDDLETOWN PROJECT.
    -(1) ONE UNIT REQUIRED FOR KING MOUNTAIN PROJECT.
13. IMPERIAL DIMENSIONS TAKE PRECEDENCE OVER METRIC. METRIC DIMENSIONS ARE TO BE VERIFIED TO THE IMPERIAL BEFORE USE.

## REFERENCE DRAWINGS:

V17494-BCND-0041 - BOTTOM CASING BOX 4 (BC40B)
V17494-BCND-0052 & 0053 - BOTTOM CASING BOX 3 THRU 5 DETAILS
V17494-BCND-0090 - STANDARD CASING & LINER DETAILS
V17494-EBND-0103 - STANDARD FABRICATION TOLERANCES FOR TOP AND BOTTOM CASINGS

| Rev. | Description | Date | Drawn | Chkd. 1 | Chkd. 2 | Appr. |
|---|---|---|---|---|---|---|
| 00 | FIRST ISSUE | 19-NOV-15 | TA | JONES | - | FRY |

Revisions

This drawing contains Vogt Power International's confidential and proprietary information and cannot be used, duplicated or disclosed in whole or in part, except with the express written permission of Vogt Power International EXCEPT AS EXPRESSLY STATED IN ANY WRITTEN CONTRACT - ALL WARRANTES RELATING TO THIS DRAWING, INCLUDING THE WARRANTIES OF MERCHANTABILITY AND FITNESS, ARE DISCLAIMED.
©Vogt Power International, Inc. all rights reserved as an unpublished work.

MIDDLETOWN ENERGY CENTER
and
KINGS MOUNTAIN ENERGY CENTER
for
NTE ENERGY and GEMMA POWER SYSTEMS

VOGT POWER PROJECTS V17494 & V17495

3rd ANGLE PROJECTION

Scale: ½" = 1'-0"

Title
BOTTOM CASING BOX4
BC40A & BC40C

Vogt Power International
13551 Triton Park Blvd
Suite 2000
Louisville, Ky. 40223 USA
www.VogtPower.com

| Internal Drawing Status | Size | Drawing No. | Rev. |
|---|---|---|---|
| FOR RECORD | D | V17494-BCND-0040 | 00 |