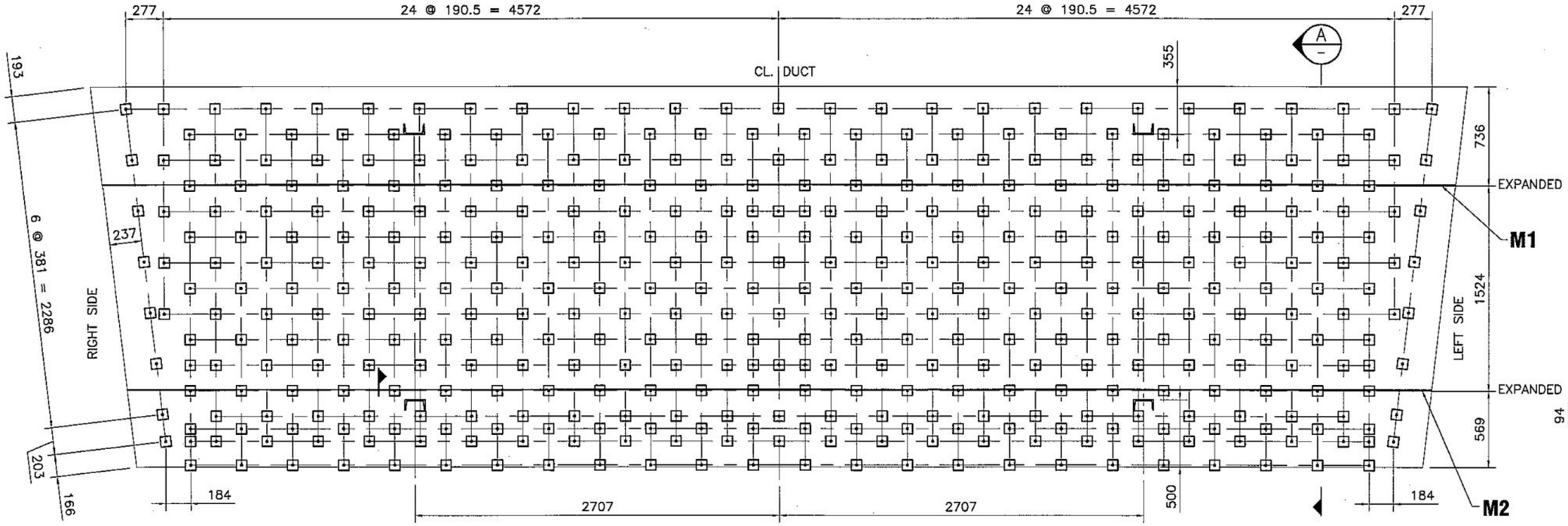

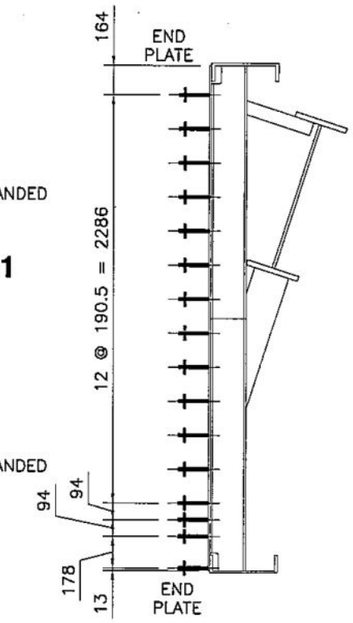

SECTION A

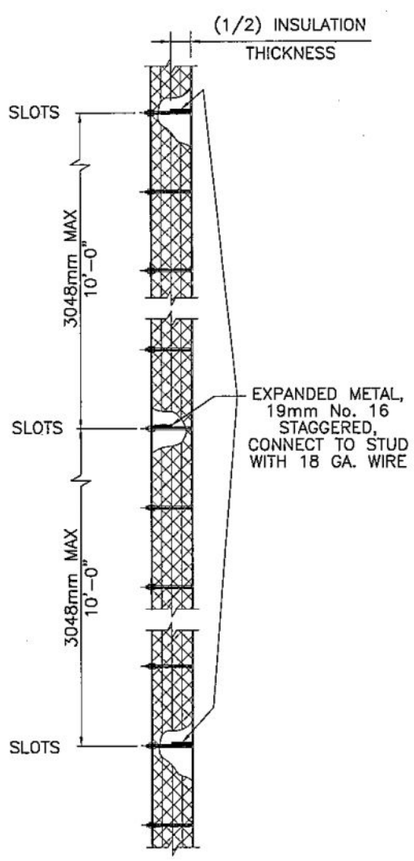

TYPICAL EXPANDED METAL LOCATIONS

FOR DUCTWORK SIDE WALLS & ROOF SLOPES OVER 30°

SU

GAS FLOW

DWID-T6

TOP PANEL STUDS LAYOUT

(LOOKING FROM INSIDE LINER VIEW)

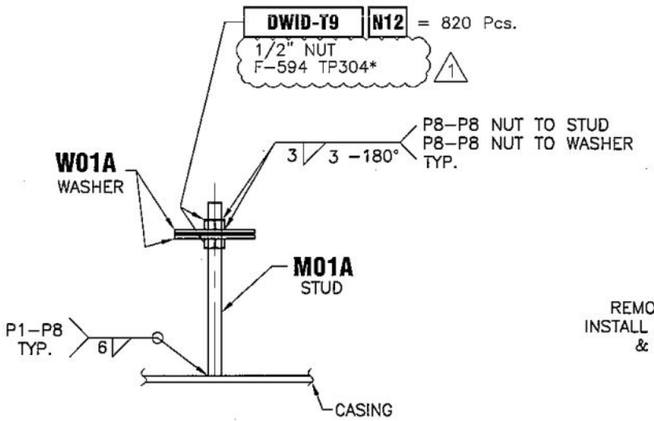

TYPICAL FOR STUD

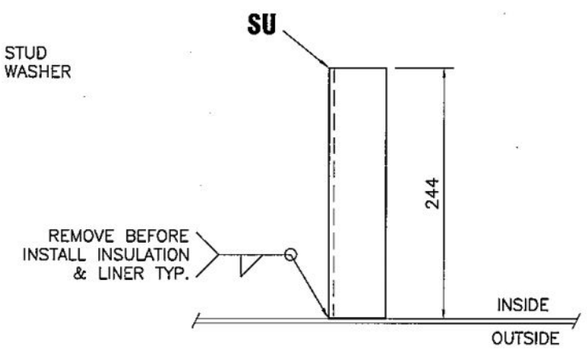

SECTION SU

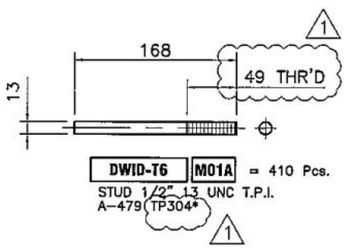

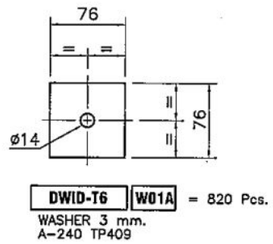

This drawing contains Visavakit Patana Corp., Ltd.'s confidential and proprietary information and cannot be used, duplicated or disclosed in whole or in part, except with the express written permission of Visavakit Patana Corp., ltd.

© Visavakit Patana Corp., Ltd. all rights reserved as an unpublished work.

VISAVAKIT PATANA CORPORATION LIMITED
OFFICE :215/148-149 Pracharad 1 Road, Bangsue, Bangkok 10800 Tel: 0-2585-2556-8 Fax: 0-2587-6068
PLANT 1 :28/2 Moo4, Soi Chai Ua, Pathumthani 12000 Tel: 0-2975-2811-4 Fax: 0-2975-2815
PLANT 2 :52 Moo7, Kubangluang, Ladlumkaew, Pathumthani 12140 Tel: 0-2979-4001-9 Fax: 0-2979-4010
www.vipco-thai.com Email : vipco@vipco-thai.com

VIPCO

VOGT POWER INTERNATIONAL
Released, Work May Proceed
Bell, Milton | Feb-16-2016

VOGT POWER INTERNATIONAL
V17494-DWXD-7221-00
26-Jan-2016

REV.	DATE	DESCRIPTION	DRAWN	CHECKED	APPROVED
1	23/01/16	CHANGE DESC.OF MAT'L	O.CHAIYAN		
0	13/01/16	FIRST ISSUE	S.KOSIN		

TITLE

VOGT POWER INTERNATIONAL
MIDDLETOWN ENERGY CENTER PROJECT
INLET DUCT (LINER)
TOP PANEL

ISO-A (3rd)

JOB NO. 1711

REF.DWG.NO. Y15-1711-E0101~E0104

VIPCO DWG.NO. Y15-1711-DWID-T6-06

REV. 1

A3

PLOTTING DATE & TIME | 23 Jan 2016 - 1:25pm | FILE LOCATION | Acad-X:\1711_VPI 17494_NPP_Middle Town\Shop dwg\1.1_INLET DUCT\LINER\Y15-1711- DWID-T6-01 - Rev.1.dwg