UNIVERSITATEA TEHNICĂ
DIN CLUJ-NAPOCA

SYSTEMS WITH ANALOG INTEGRATED CIRCUITS PROJECT

ANALOG INTERFACE

Professor: Alessandro Battigelli

Student: Silaghi Sebastian

Year: III

Specialization: Applied Electronics

TABLE OF CONTENT

1. Project theme 3
2. Stages sizing 4
2.1 Stage 1 sizing 4
2.2 Stage 2 sizing 6
2.3 Stage 3 sizing 8
2.4. Stage 4 sizing 10
3. Circuit simulations 13
3.1 Stage 1 simulations 13
3.1.1 DCOP simulation 13
3.1.2 AC simulations 15
3.1.3 Transient simulations 19
3.2 Stage 2 simulations 25
3.2.1 DCOP simulations 25
3.2.2 AC simulations 26
3.2.3 Transient simulations 29
3.3 Stage 3 simulations 31
3.3.1 DCOP simulations 31
3.3.2 AC simulations 32
3.3.3 Transient simulations 40
3.4 Stage 4 simulations 42
3.4.1 DCOP simulations 42
3.4.2 Transient simulations 43
3.4.3 DC Sweep simulations 49
4. Practical implementation 50
4.1 Stage 1 50
4.2 Stage 2 54
4.3 Stage 3 57
4.4 Stage 4 62
BIBLIOGRAPHY 65

1. Project theme

Design of an analog interface consisting of four cascaded stages: instrumentation amplifier made with three operational amplifiers with differential voltage input and voltage output (stage 1), an analog Tow-Thomas filter with voltage input and voltage output (stage 2), an amplifier with programmable gain (stage 3) and a precision double-alternating rectifier (stage 4).

The differential input signal is the voltage signal given by a sensor with amplitude in the range [261mV; 520mV], and the maximum frequency of the signal is considered the center frequency of the band-pass filter in the Tow-Thomas filter.

Stage 1 - Instrumentation amplifier: linear gain 6 [V/V] with adjustment of the DC voltage at the output. The stage band should be higher than the maximum frequency of the input signal and the output signal should be undistorted.

Stage 2 - Analog Tow-Thomas filter: unity gain in the passband, minimum input impedance 1kΩ and quality factor 1. The center frequency of the bandpass filter and the Tow-Thomas filter band have the same frequency of 7kHz. The signal at the output of the filter should be undistorted.

Stage 3 - The programmable gain amplifier (PGA) operates as an inverting amplifier with switches outside the signal path for gain adjustment. The minimum gain of the stage is 1dB, and the maximum gain is 7dB with a resolution of 2dB in four steps. The minimum input impedance should be 1.5kΩ, and the output signal should be undistorted at the maximum frequency for both the minimum input amplitude and maximum gain of the stage, and for the maximum input amplitude and minimum gain of the stage.

Stage 4 – Double-phase precision rectifier: unity gain and it is desired to perform its function correctly at large signal.

For the design, the ADA4627 operational amplifier and the ADG1311 integrated circuit for switches were used.

2. Stages sizing

2.1 Stage 1 sizing

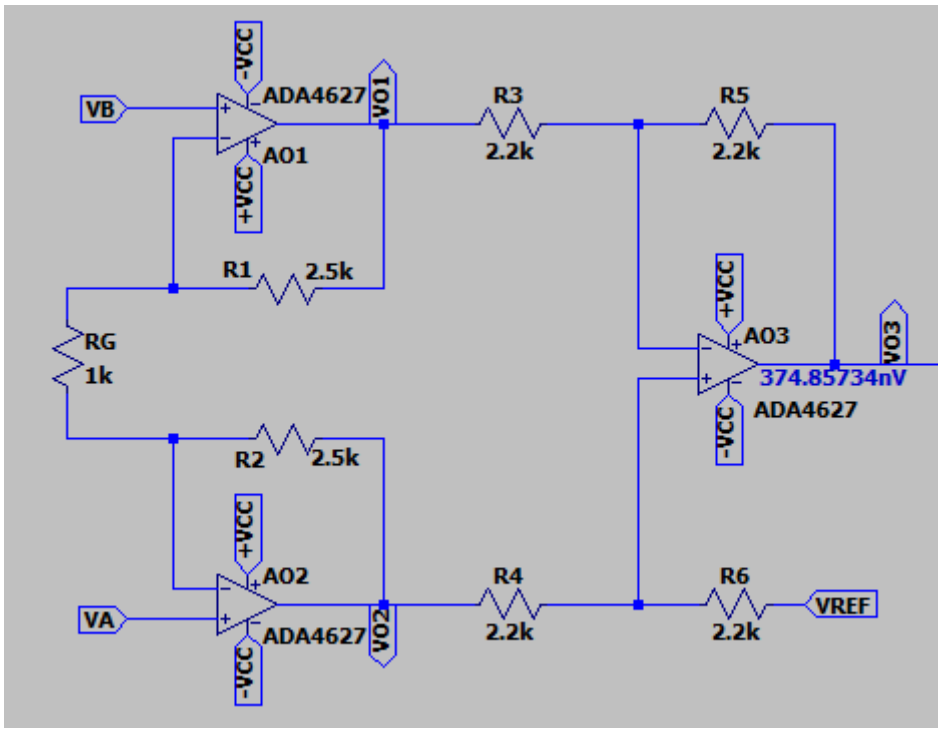

Figure 1. Instrumentation amplifier

This stage consists of 2 substages, each with a separate gain: AO1 and AO2 form the first substage with gain A1, and AO3 forms the second substage with gain A2.

For the first substage, both operational amplifiers AO1 and AO2 have negative feedback, therefore we have:

$$\begin{matrix} v_1^+ = v_1^- = v_B \\ v_2^+ = v_2^- = v_A \end{matrix} \quad \Rightarrow i_{RG} = \frac{v_A - v_B}{R_G}$$

Also,

$$v_{02} - v_{01} = v_{R_2} + v_{RG} + v_{R_1}$$

$$v_{02} - v_{01} = i_{RG} \cdot R_2 + i_{RG} \cdot R_G + i_{RG} \cdot R_1$$

$$R_1 = R_2 \Rightarrow v_{02} - v_{01} = i_{RG} \cdot (2R_1 + R_G) \quad (1)$$

Replacing i_{RG} in relation (1) we get:

$$v_{02} - v_{01} = \left(1 + \frac{2R_1}{R_G}\right)(v_A - v_B)$$

So, we obtain the gain of the first substage $A_1 = \left(1 + \frac{2R_1}{R_G}\right)$

For the second substage, we use Millman`s theorem to find the potentials v_3^+ *and* v_3^-

$$v_3^- = \frac{\frac{v_{01}}{R_3} + \frac{v_{03}}{R_5}}{\frac{1}{R_3} + \frac{1}{R_5}}$$

$$v_3^+ = \frac{\frac{v_{02}}{R_4} + \frac{V_{REF}}{R_6}}{\frac{1}{R_4} + \frac{1}{R_6}}$$

AO3 also has negative feedback, thus:

$v_3^+ = v_3^-$ and we consider $R_3 = R_4$ și $R_5 = R_6$ then we get:

$$v_{03} = \frac{R_5}{R_3}(v_{02} - v_{01}) + V_{REF} \quad (2)$$

So, we obtain the gain of the second substage $A_2 = \frac{R_5}{R_3}$

Replacing realtion (1) in (2) we have: $v_{03} = \frac{R_5}{R_3}\left(1 + \frac{2R_1}{RG}\right)(v_A - v_B) + V_{REF}$

The linear gain A of the entire stage will be the product of the individual gains of the two substages, which must be 6 V/V. We want the first substage to be the gain stage, and the second to be the differential stage with unity gain, therefore:

$$A = A_1 \cdot A_2 = 6 \Rightarrow \begin{cases} A_1 = 6 \ [\frac{V}{V}] \\ A_2 = 1 \ [\frac{V}{V}] \end{cases}$$

$$A_2 = 1 \Rightarrow \begin{cases} \frac{R_5}{R_3} = 1 \Rightarrow R_5 = R_3 \\ R_3 = 2.2k\Omega \Rightarrow R_5 = 2.2k\Omega \end{cases}$$

$$A_1 = 6 \Rightarrow \begin{cases} 1 + \dfrac{2R_1}{R_G} = 6 \Rightarrow R_1 = \dfrac{5}{2} R_G \\ R_G = 1k\Omega \Rightarrow R_5 = 2.5k\Omega \end{cases}$$

From *.op* analysis $\Rightarrow$ $v_{03} = V_{os}$= 585μV $\Rightarrow$ V_{REF} we set it to 585μV for the output DC offset voltage adjustment. In figure 1 that voltage of 375nV represents the offset voltage after compensation.

2.2 Stage 2 sizing

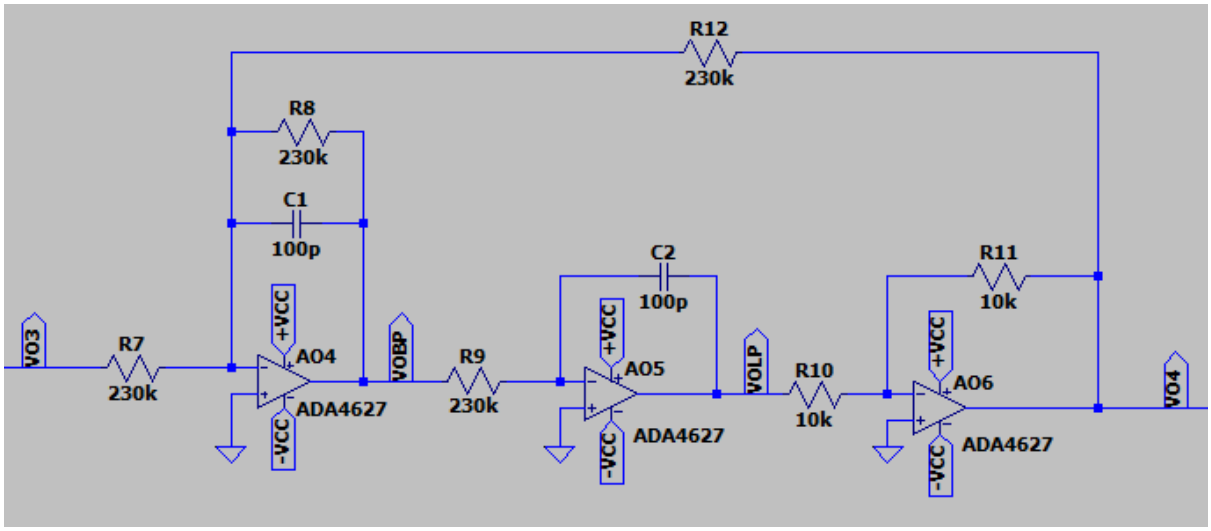

Figure 2. Tow-Thomas filter

Transfer function general form: $H(s) = H_0 \frac{\omega_p^2}{s^2 + s \cdot \frac{\omega_p}{Q} + \omega_p^2}$

Bandpass gain: $H_0 = \frac{R_{12}}{R_7}$

Cutoff angular frequency: $\omega_p = \frac{1}{\sqrt{R_9 R_{12} C_1 C_2}}$

Quality factor: $Q = R_8 \sqrt{\frac{C_1}{C_2} \cdot \frac{1}{R_9 R_{12}}}$

$H_0 = 1 \Rightarrow R_{12} = R_7$ (3)

For calculation simplicity, we consider $R_{12} = R_9$ (4) and $C_1 = C_2$ (5) and we get:

$$w_p = \frac{1}{R_9 C_1} \ (6)\ , \quad Q = \frac{R_8}{R_9} \ (7)$$

$Q = 1 \Rightarrow$ from (7) that $R_8 = R_9$ (8)

From (6) $\Rightarrow$ the cutoff frequency of the filter is $f_p = \frac{1}{2\pi R_9 C_1}$

Also, $f_p = BW \cdot Q$, where BW is the band of the filter, and we get the equality:

$$\frac{1}{2\pi R_9 C_1} = BW \cdot Q$$

We know that $BW = 7kHz$ and Q = 1 $\Rightarrow \frac{1}{2\pi R_9 C_1} = 7kHz \Rightarrow R_9 C_1 = 23 \cdot 10^{-6}$

We choose C_1= 100pF $\Rightarrow R_9 = 230k\Omega$ and according to (4), (5), (8) and (3) $\Rightarrow$
$R_{12} = 230k\Omega$, C_2= 100pF, $R_8 = 230k\Omega$, respectively $R_7 = 230k\Omega$

We want the inverting amplifier AO6 to have unity gain in order to maintain the total gain of the filter to 1. The gain of the amplifier AO6 is $|A| = \frac{R_{11}}{R_{10}}$.

$|A| = 1 \Rightarrow R_{11} = R_{10}$

Let $R_{11} = 10k\Omega \Rightarrow R_{10} = 10k\Omega$

2.3 Stage 3 sizing

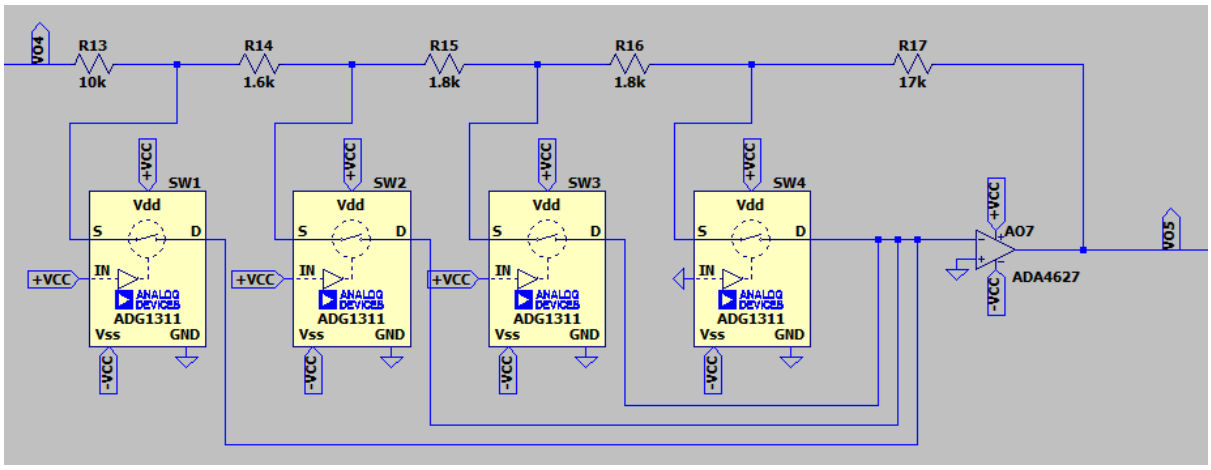

Figure 3. Programmable gain amplifier (PGA)

This PGA can generate 4 different gains (A_1, A_2, A_3, A_4) from 1dB to 7dB, in four steps, so we have a 2dB step between each gain, where the overall gain is $|A| = \frac{R_F}{R_G}$.

$|A_1|$ = 1 dB = 1.12 V/V

$|A_2|$ = 3 dB = 1.41 V/V

$|A_3|$ = 5 dB = 1.78 V/V

$|A_4|$ = 7 dB = 2.24 V/V

The switches made with the ADG1311 integrated circuit operate in complementary logic, so a switch will be active if a logic 0 (GND) is applied to the IN terminal and will be inactive if a logic 1 (+VCC) is applied to the IN terminal.

SW1	SW2	SW3	SW4	R_F	R_G	$\|A\|$
0	1	1	1	$R_{17} + R_{16} + R_{15} + R_{14}$	R_{13}	A_4
1	0	1	1	$R_{17} + R_{16} + R_{15}$	$R_{13} + R_{14}$	A_3
1	1	0	1	$R_{17} + R_{16}$	$R_{13} + R_{14} + R_{15}$	A_2
1	1	1	0	R_{17}	$R_{13} + R_{14} + R_{15} + R_{16}$	A_1

$$\begin{cases} \dfrac{R_{17}}{R_{13}+R_{14}+R_{15}+R_{16}} = 1.12 \quad (9) \\ \dfrac{R_{16}+R_{17}}{R_{13}+R_{14}+R_{15}} = 1.41 \quad (10) \\ \dfrac{R_{15}+R_{16}+R_{17}}{R_{13}+R_{14}} = 1.78 \quad (11) \\ \dfrac{R_{14}+R_{15}+R_{16}+R_{17}}{R_{13}} = 2.24 \quad (12) \end{cases}$$

(12) – (11) ⇒ $R_{14} = 0.16R_{13}$ (13)

(11) – (10) ⇒ $R_{15} = 0.18R_{13}$ (14)

(10) – (9) ⇒ $R_{16} = 0.18R_{13}$ (15)

From (9), (13), (14), (15) ⇒ $R_{17} = 1.7R_{13}$ (16)

Let $R_{13} = 10k\Omega$. From (13), (14), (15), (16) $\begin{cases} R_{17} = 17k\Omega \\ R_{16} = 1.8k\Omega \\ R_{15} = 1.8k\Omega \\ R_{14} = 1.6k\Omega \end{cases}$

2.4. Stage 4 sizing

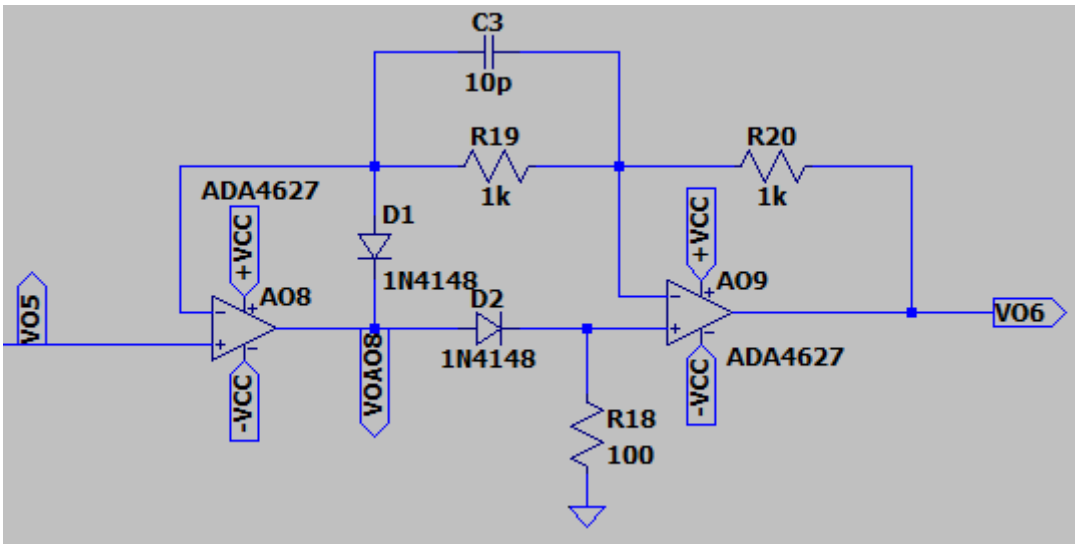

Figure 4. Precision positive full-wave rectifier

We assume for both cases I and II that the two diodes D1 and D2 are OFF. We will consider $v_{in} = v_{O5}$ and $v_{out} = v_{O6}$

I. $v_{in} < 0$

$$\left.\begin{array}{l} v_8^+ = v_{in} < 0 \\ v_9^+ = 0 \\ \text{NF at AO9} \Rightarrow v_9^+ = v_9^- = 0 \Rightarrow v_8^- = 0 \end{array}\right\} \Rightarrow v_8^+ - v_8^- < 0 \Rightarrow V_{oAO8} \searrow \text{-Vcc}$$

$$\left.\begin{array}{l} V_{A1} = 0 \\ V_{K1} = V_{oAO8} = -Vcc \end{array}\right\} \Rightarrow \text{D1 ON}$$

$$\left.\begin{array}{l} V_{A2} = V_{oAO8} = -Vcc \\ V_{K2} = 0 \end{array}\right\} \Rightarrow \text{D2 OFF}$$

For this case when $v_{in} < 0$, the diodes are actually D1 ON and D2 OFF, not as we initially assumed. Next, we analyze the circuit in this configuration. We consider the diode in conduction as a voltage source of 0.7V.

$v_8^+ = v_{in} < 0$

$v_8^- = v_D + V_{oAO8}$

NF at AO8 $\Rightarrow$ $v_8^+ = v_8^-$ (17) $\Rightarrow$ $v_{in} = v_D + V_{oAO8}$ $\Rightarrow V_{oAO8} = v_{in} - v_D$

$v_9^+ = 0$

$$v_9^- = \frac{\frac{v_8^-}{R_{19}} + \frac{v_{out}}{R_{20}}}{\frac{1}{R_{19}} + \frac{1}{R_{20}}}$$

NF at AO9 $\Rightarrow$ $v_9^+ = v_9^-$ $\Rightarrow$ $\frac{v_8^-}{R_{19}} + \frac{v_{out}}{R_{20}} = 0$ $\Rightarrow v_{out} = -\frac{R_{20}}{R_{19}} v_{in}$

II. $v_{in} > 0$

$$\left.\begin{array}{l} v_8^+ = v_{in} > 0 \\ v_8^- = 0 \end{array}\right\} \Rightarrow v_8^+ - v_8^- > 0 \Rightarrow V_{oAO8} \nearrow +\text{Vcc}$$

$$\left.\begin{array}{l} V_{A1} = 0 \\ V_{K1} = V_{oAO8} = +Vcc \end{array}\right\} \Rightarrow \text{D1 OFF}$$

$$\left.\begin{array}{l} V_{A2} = V_{oAO8} = +Vcc \\ V_{K2} = 0 \end{array}\right\} \Rightarrow \text{D2 ON}$$

For this case when $v_{in} < 0$, the diodes are actually D1 OFF and D2 ON, not as we initially assumed. Next, we analyze the circuit in this configuration. We consider the diode in conduction as a voltage source of 0.7V.

$v_8^+ = v_{in}$

$v_9^+ = V_{oAO8} - v_D$ (18)

$$v_9^- = \frac{\frac{v_8^-}{R_{19}} + \frac{v_{out}}{R_{20}}}{\frac{1}{R_{19}} + \frac{1}{R_{20}}} \quad (19)$$

NF at AO9 ⇒ $v_9^+ = v_9^-$ (20) ⇒ NF at AO8 through AO9 ⇒ $v_8^+ = v_8^- = v_{in}$ (21) (voltage follower) ⇒ $v_9^+ = v_{in}$ (22)

From (18), (22) ⇒ $v_{in} = V_{oAO8} - v_D \Rightarrow V_{oAO8} = v_{in} + v_D$

From (19), (21), (22) ⇒ $v_{in} = \dfrac{\frac{v_{in}}{R_{19}} + \frac{v_{out}}{R_{20}}}{\frac{1}{R_{19}} + \frac{1}{R_{20}}} \Rightarrow v_{out} = v_{vin}$

Concl.: $v_{out} = \begin{cases} -\dfrac{R_{20}}{R_{19}} v_{in} & \text{dacă } v_{in} < 0 \\ v_{in} & \text{dacă } v_{in} > 0 \end{cases}$ $\quad v_{in} \in [v_D + V_{oAO8}, V_{oAO8} - v_D]$

The gain $\dfrac{R_{20}}{R_{19}}$ for negative alternation of the input signal must be 1, therefore $R_{20} = R_{19}$. IF we let $R_{20} = 1k\Omega \Rightarrow R_{19} = 1k\Omega$.

Resistor R18 influences the rectified output voltage swing on the positive alternation. According to the amplifier datasheet, for a 100Ω load, the output voltage swing V_oAO8_high is +Vcc-1.3V, and V_oAO8_low is -Vcc+1.3V . In this stage configuration, if R18 is 100Ω, the rectifier output oscillates. The more the resistance R18 decreases, the more the oscillations are damped, but already below 60Ω we do not get a good output voltage swing, and the rectification on the positive alternation is limited below the amplitude of the input signal. Thus, a possible solution would be a frequency compensation using a capacitor on the feedback of AO8 to move the parasitic poles that create oscillations further in frequency. The load remains at 100Ω and the capacitor C3 is 10pF. The value of C3 is experimentally chosen so that the rectification is correct without oscillations in the transient simulation.

In order to keep the output voltage of AO8 out of saturation, $v_{in} + v_D$ when $v_{in} > 0$, respectively $v_{in} - v_D$ when $v_{in} < 0$ must not exceed the output voltage swing V_{oAO8}_high, respectiv V_{oAO8}_low.

3. Circuit simulations

3.1 Stage 1 simulations

3.1.1 DCOP simulation

D:\PROIECT SCIA\AI_3AO_V-V.net

```
       --- Operating Point ---

V(n004):        -0.000292312   voltage
V(-vcc):        -15            voltage
V(vo2):         -0.00029235    voltage
V(n002):        -0.000292312   voltage
V(n001):        -0.000145971   voltage
V(vref):        0.000585       voltage
V(va):          0              voltage
V(+vcc):        15             voltage
V(vb):          0              voltage
V(vo1):         -0.000292351   voltage
V(n003):        0.000146341    voltage
V(vo3):         3.75032e-07    voltage
I(R2):          -1.54548e-11   device_current
I(R3):          6.65363e-08    device_current
I(R6):          1.9939e-07     device_current
I(V5):          -0.0206957     device_current
I(V2):          1.50235e-11    device_current
I(V3):          0.0206959      device_current
I(RG1):         -1.86693e-14   device_current
I(R4):          1.99405e-07    device_current
I(R5):          6.65209e-08    device_current
I(V1):          1.50235e-11    device_current
I(R1):          -1.55428e-11   device_current
I(V4):          -1.9939e-07    device_current
```

Figure 5. DC operating point

D:\PROIECT SCIA\AI_3AO_V-V.net

```
       --- Operating Point ---

V(n004):        -0.000292312   voltage
V(-vcc):        -15            voltage
V(vo2):         -0.00029235    voltage
V(n002):        -0.000292312   voltage
V(n001):        -0.00043847    voltage
V(vref):        0              voltage
V(va):          0              voltage
V(+vcc):        15             voltage
V(vb):          0              voltage
V(vo1):         -0.000292351   voltage
V(n003):        -0.000146159   voltage
V(vo3):         -0.000584624   voltage
I(R2):          -1.54577e-11   device_current
I(R3):          -6.64179e-08   device_current
I(R6):          6.64358e-08    device_current
I(V5):          -0.0206957     device_current
I(V2):          1.50235e-11    device_current
I(V3):          0.0206958      device_current
I(RG1):         -4.54314e-14   device_current
I(R4):          6.64508e-08    device_current
I(R5):          -6.64335e-08   device_current
I(V1):          1.50235e-11    device_current
I(R1):          -1.56e-11      device_current
I(V4):          -6.64358e-08   device_current
```

Figure 6. DC output voltage without offset compensation

D:\PROIECT SCIA\AI_3AO_V-V.net

```
       --- Operating Point ---

V(n004):        -0.000292312   voltage
V(-vcc):        -15            voltage
V(vo2):         -0.00029235    voltage
V(n002):        -0.000292312   voltage
V(n001):        -0.000145971   voltage
V(vref):        0.000585       voltage
V(va):          0              voltage
V(+vcc):        15             voltage
V(vb):          0              voltage
V(vo1):         -0.000292351   voltage
V(n003):        0.000146341    voltage
V(vo3):         3.75032e-07    voltage
I(R2):          -1.54548e-11   device_current
I(R3):          6.65363e-08    device_current
I(R6):          1.9939e-07     device_current
I(V5):          -0.0206957     device_current
I(V2):          1.50235e-11    device_current
I(V3):          0.0206959      device_current
I(RG1):         -1.86693e-14   device_current
I(R4):          1.99405e-07    device_current
I(R5):          6.65209e-08    device_current
I(V1):          1.50235e-11    device_current
I(R1):          -1.55428e-11   device_current
I(V4):          -1.9939e-07    device_current
```

Figure 7. DC output voltage with offset compensation

3.1.2 AC simulations

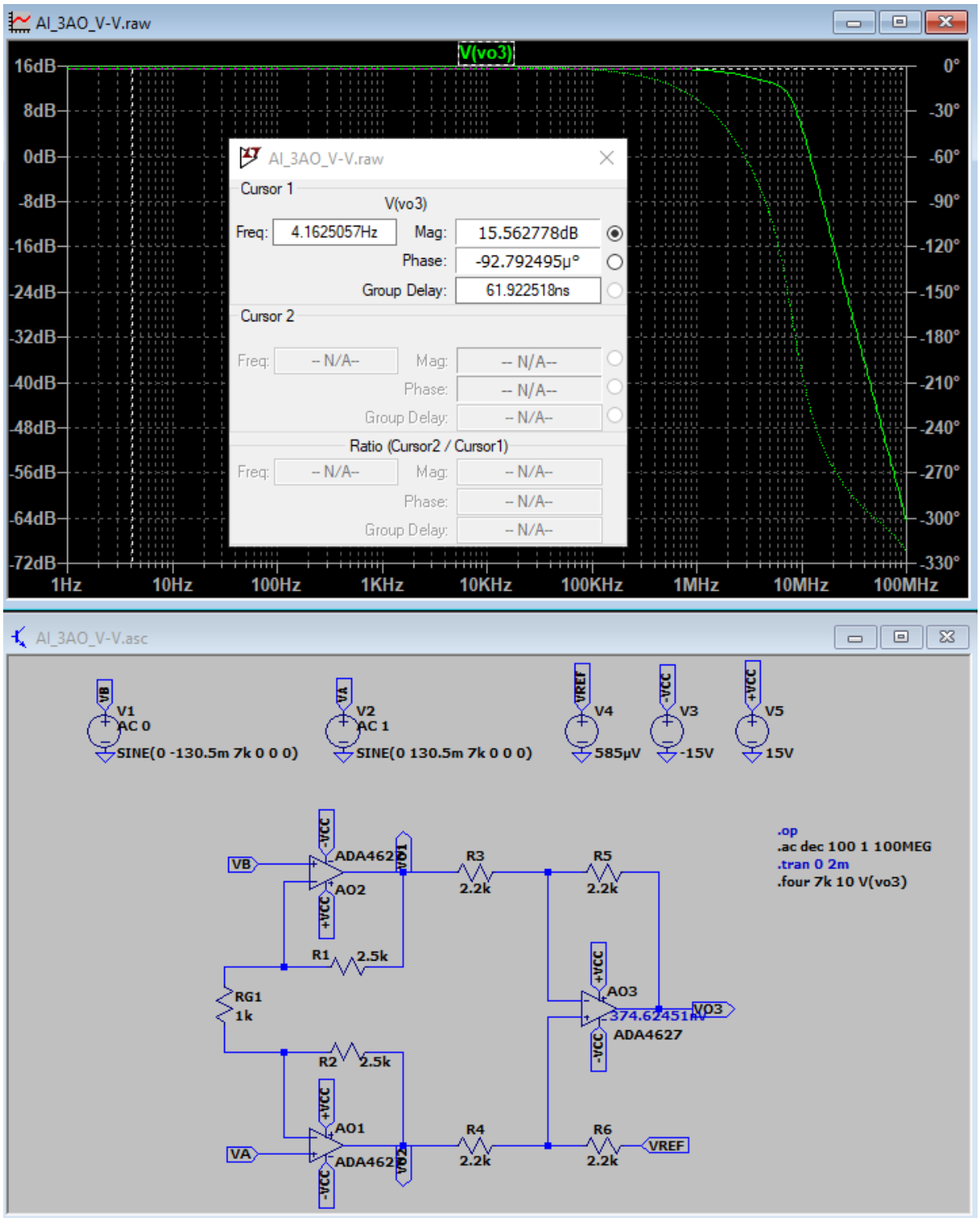

Figure 8. Low frequency gain

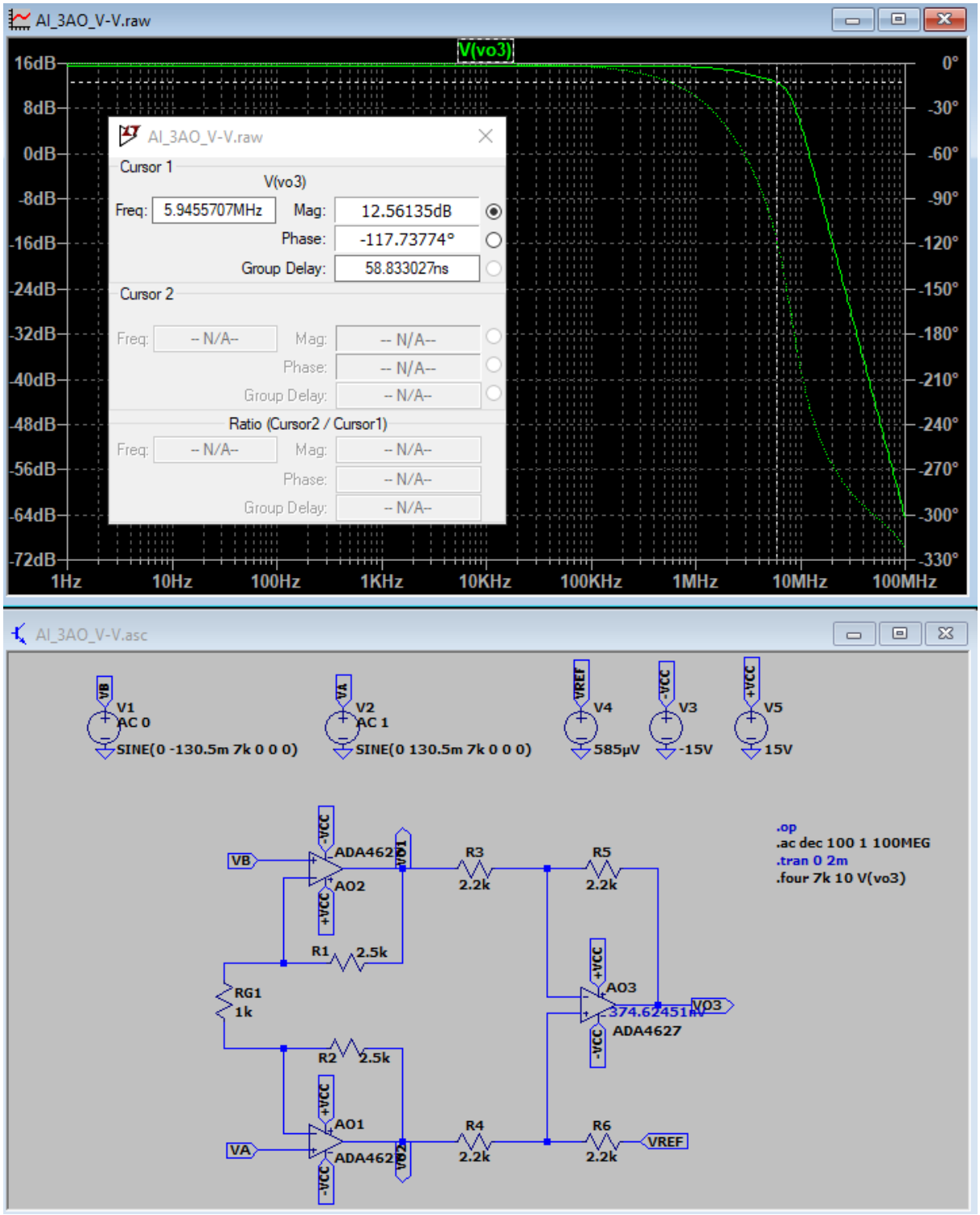

Figure 9. Band at -3dB

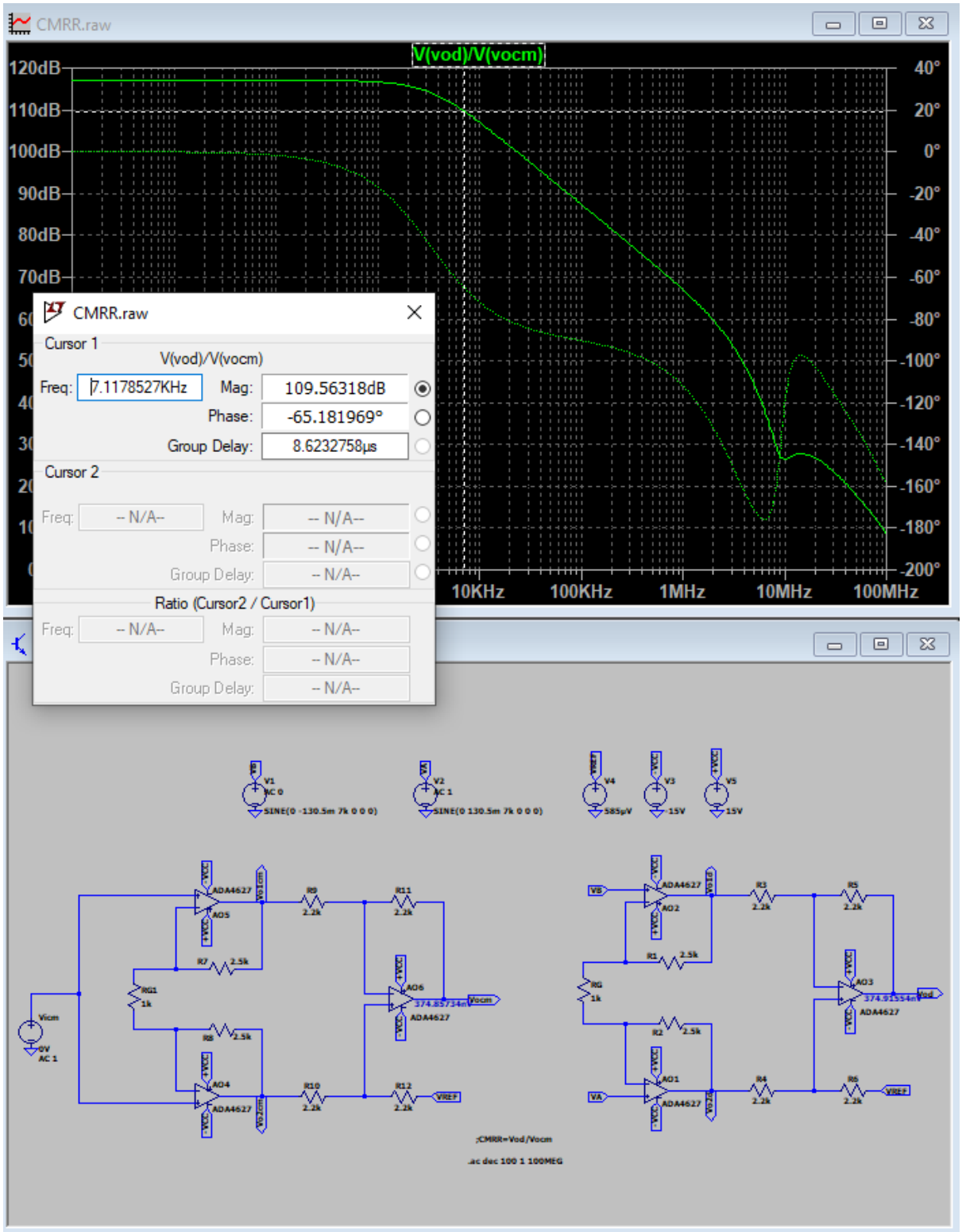

Figure 10. CMRR

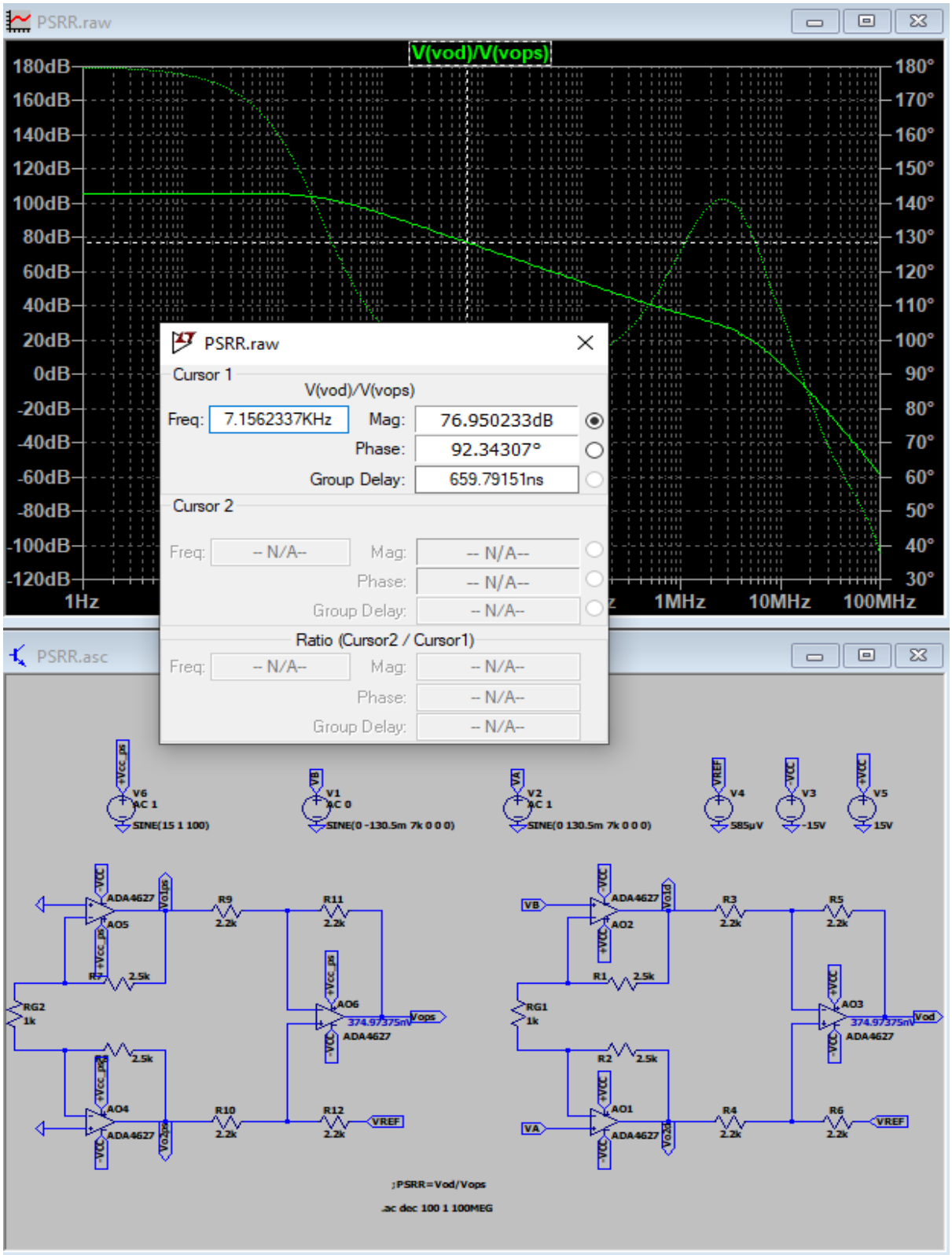

Figure 11. PSRR

3.1.3 Transient simulations

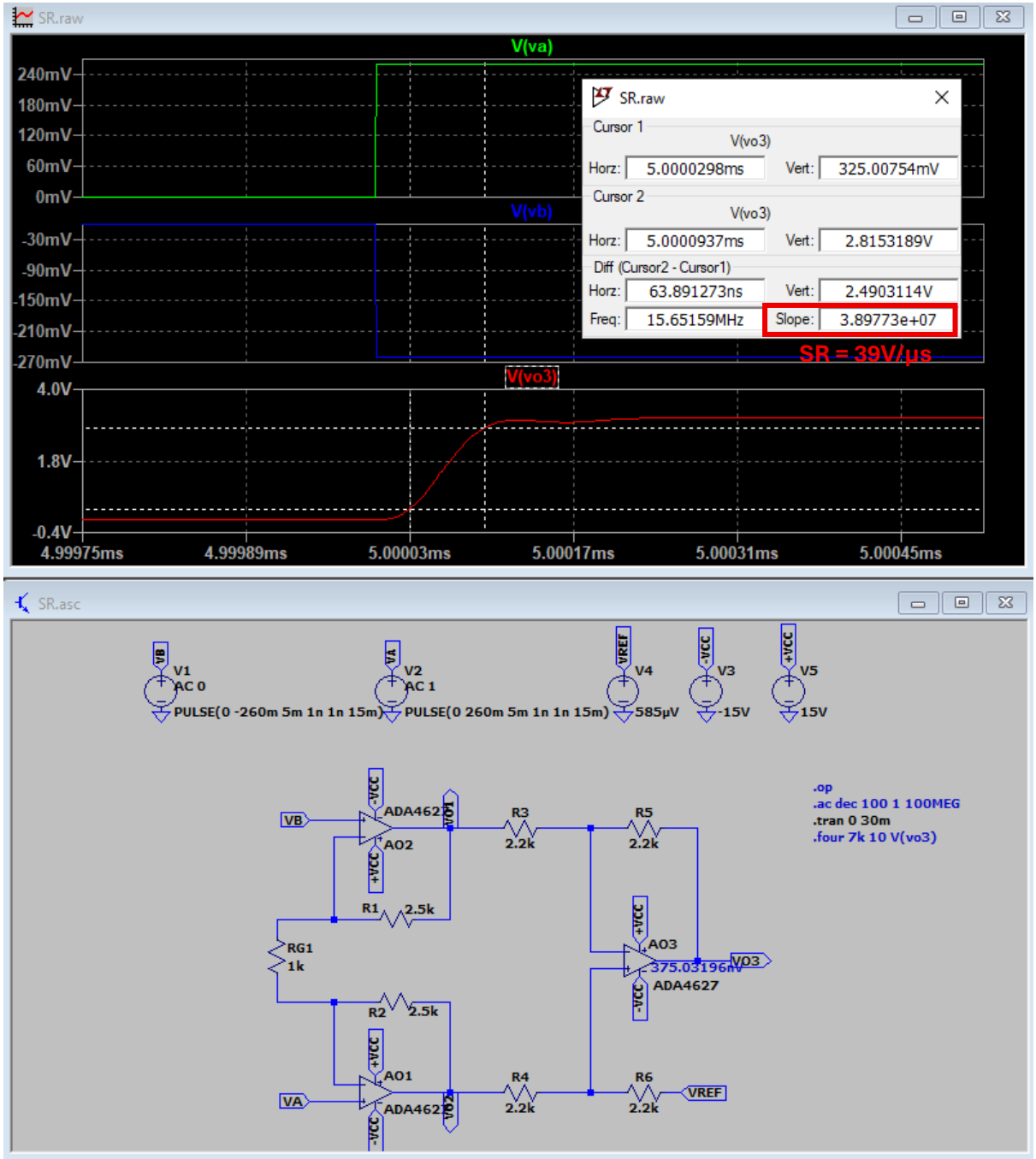

Figure 12. Slew Rate large signal

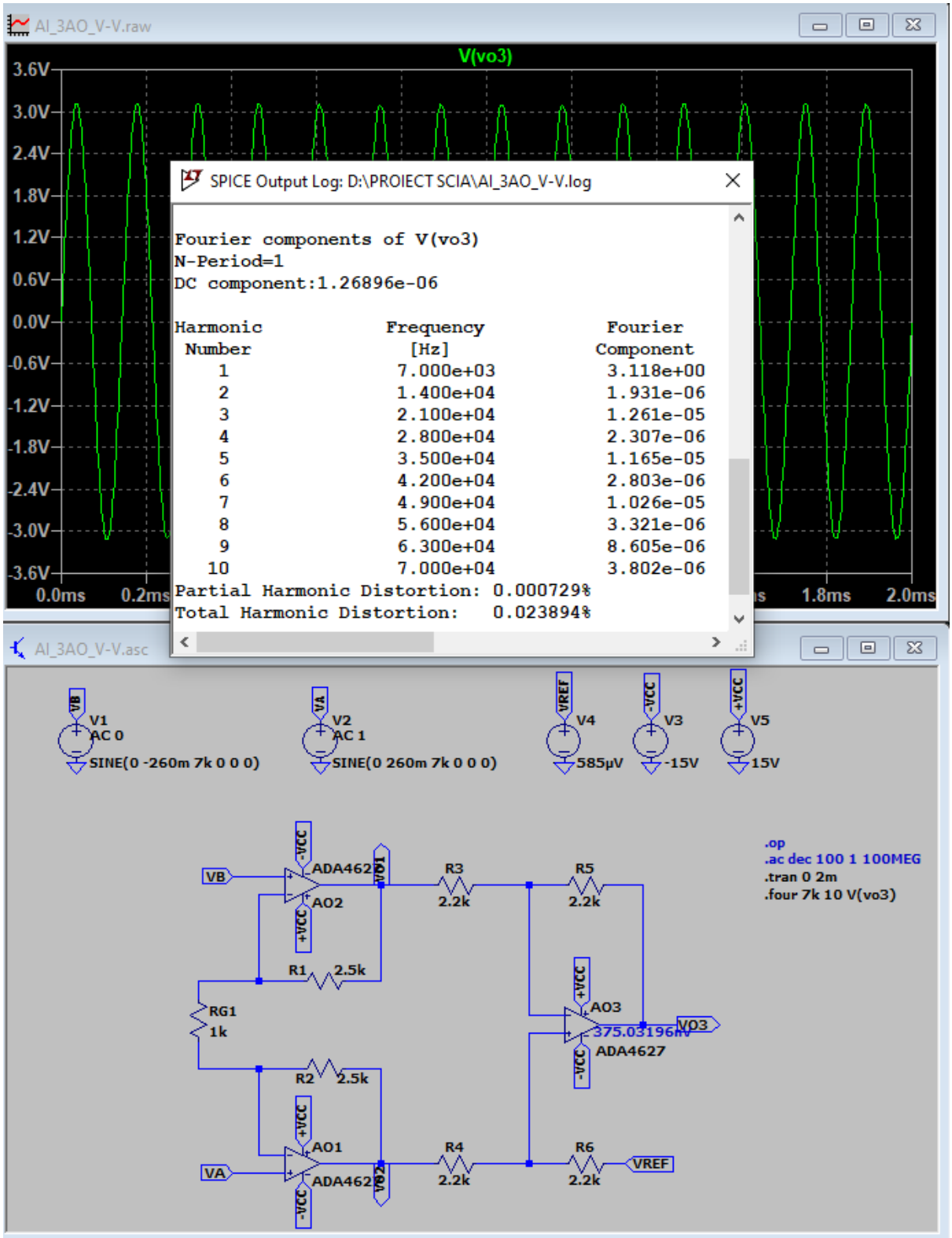

Figure 13. THD large signal

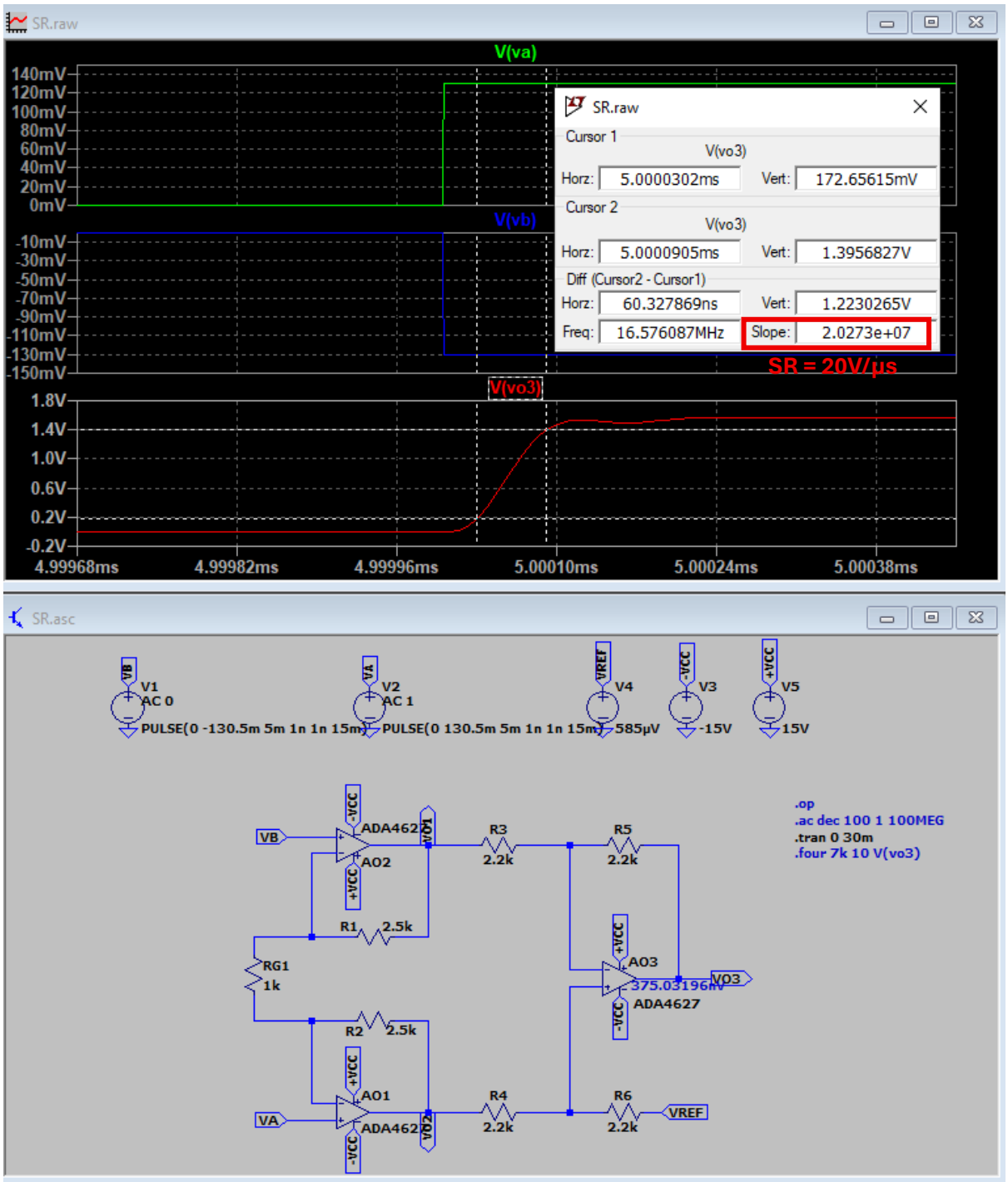

Figure 14. Slew Rate small signal

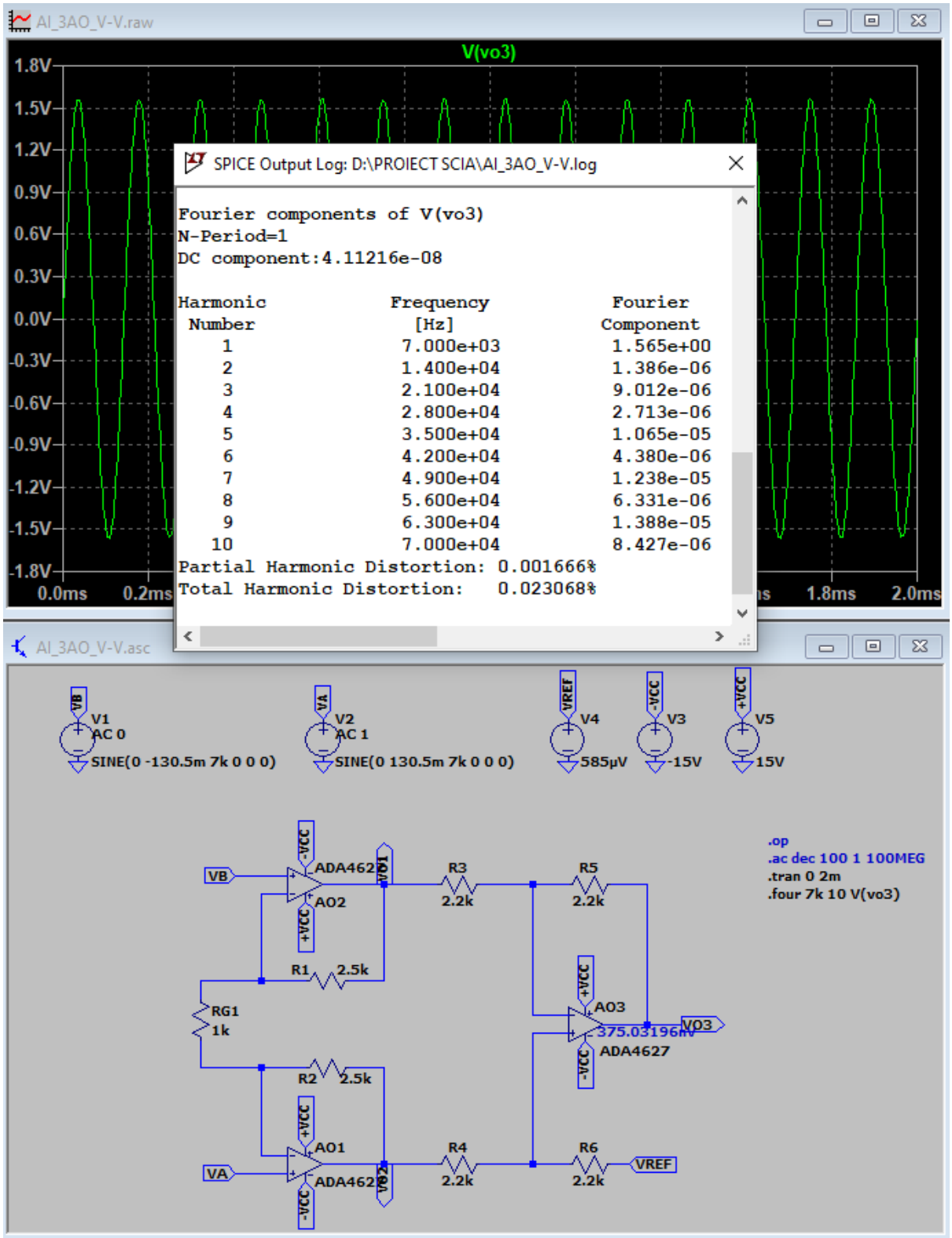

Figure 15. THD small signal

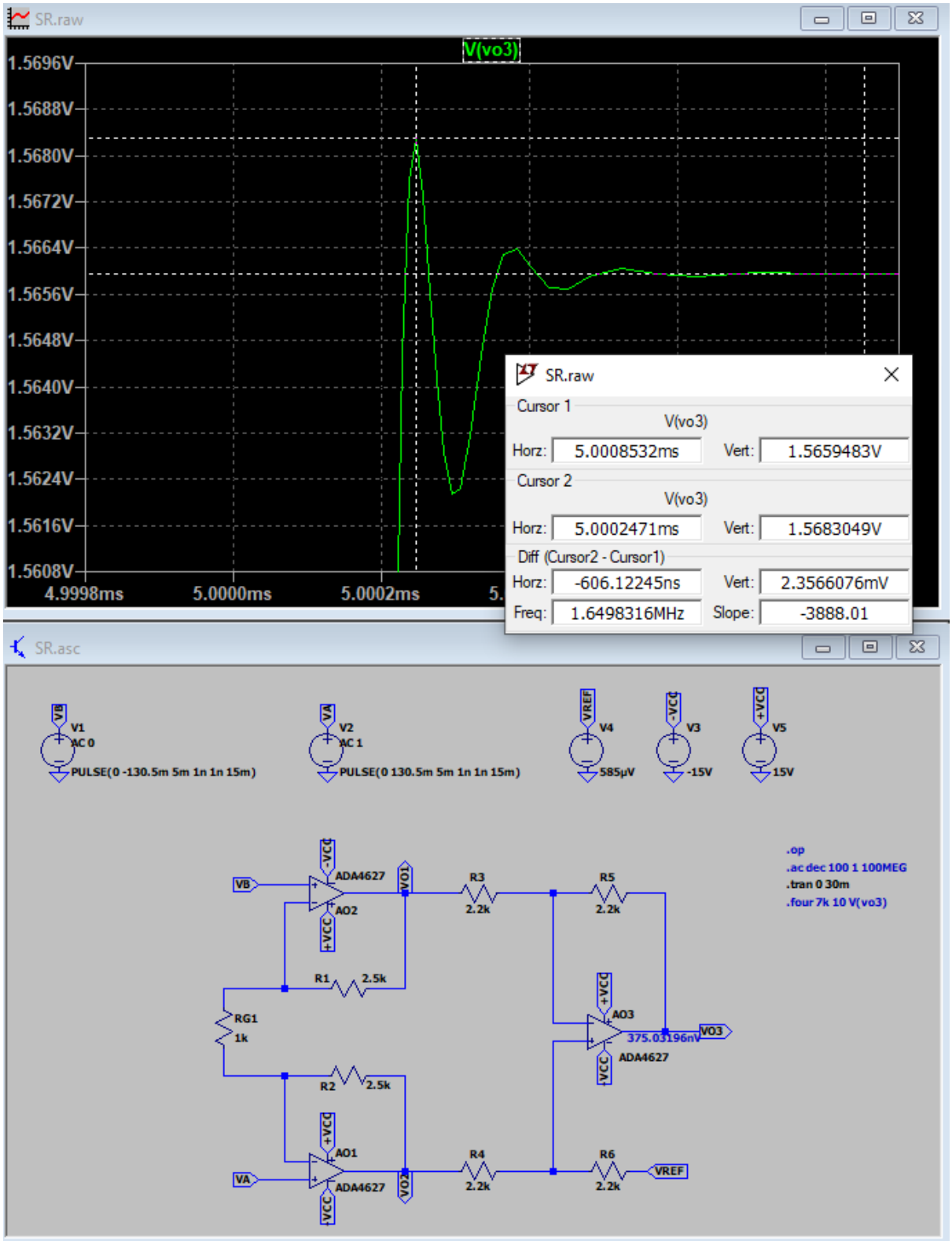

Figure 16. Small step response

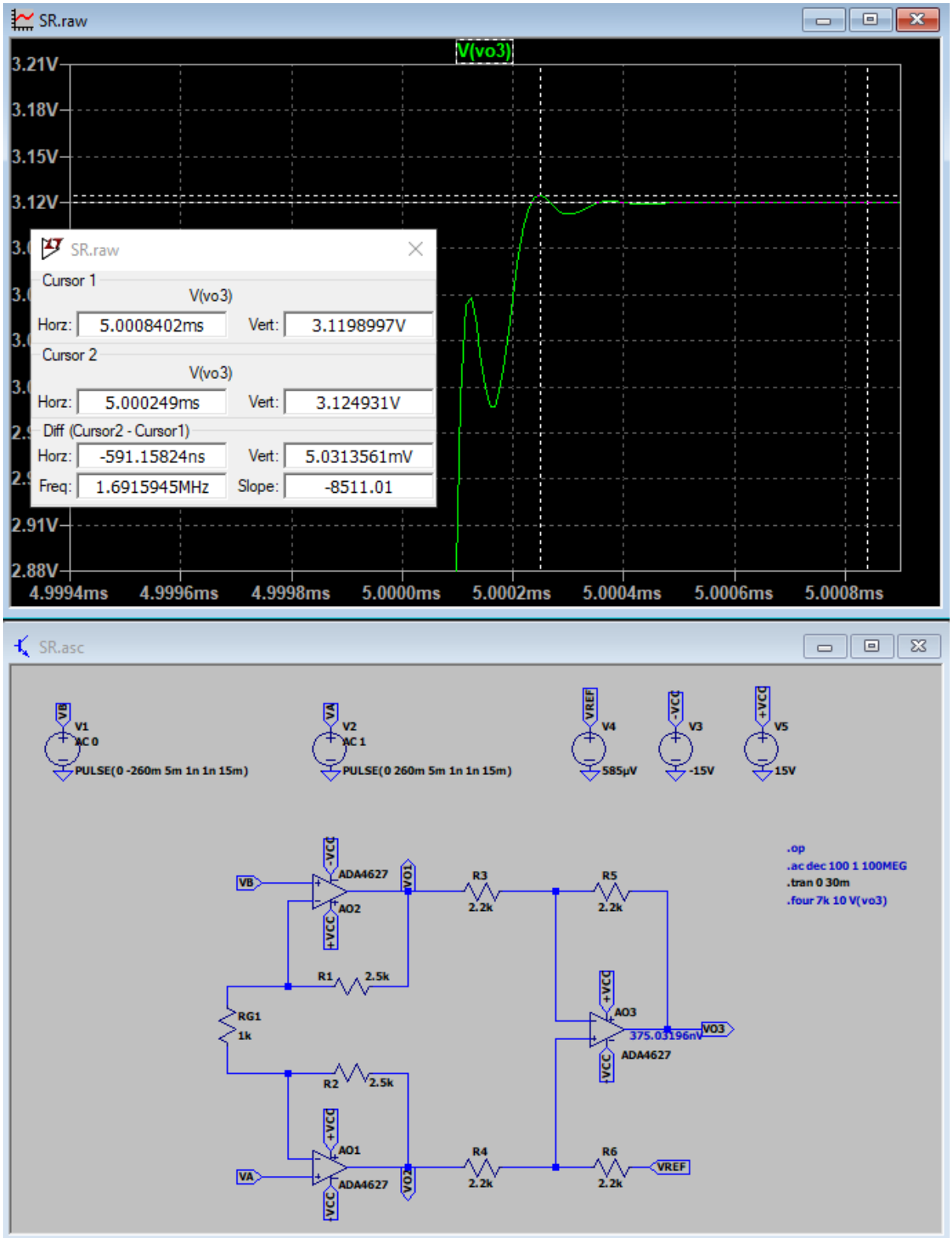

Figure 17. Large step response

3.2 Stage 2 simulations

3.2.1 DCOP simulations

D:\PROIECT SCIA\FTT.net

```
       --- Operating Point ---

V(vo3):         0              voltage
V(-vcc):        -15            voltage
V(vobp):        -0.000295884   voltage
V(volp):        -1.53959e-07   voltage
V(n001):        -0.000292312   voltage
V(+vcc):        15             voltage
V(n002):        -0.000292313   voltage
V(n003):        -0.00029231    voltage
V(vo4):         -0.000584622   voltage
I(R2):          -1.55304e-11   device_current
I(R3):          1.55239e-11    device_current
I(R4):          -2.92156e-08   device_current
I(R5):          -2.92312e-08   device_current
I(V1):          0.0206957      device_current
I(R1):          -1.27092e-09   device_current
I(V2):          -0.0206957     device_current
I(R6):          -1.27091e-09   device_current
I(C1):          -3.57199e-28   device_current
I(C2):          2.92159e-26    device_current
I(V3):          -1.27092e-09   device_current
```

Figure 18. DC operating point

3.2.2 AC simulations

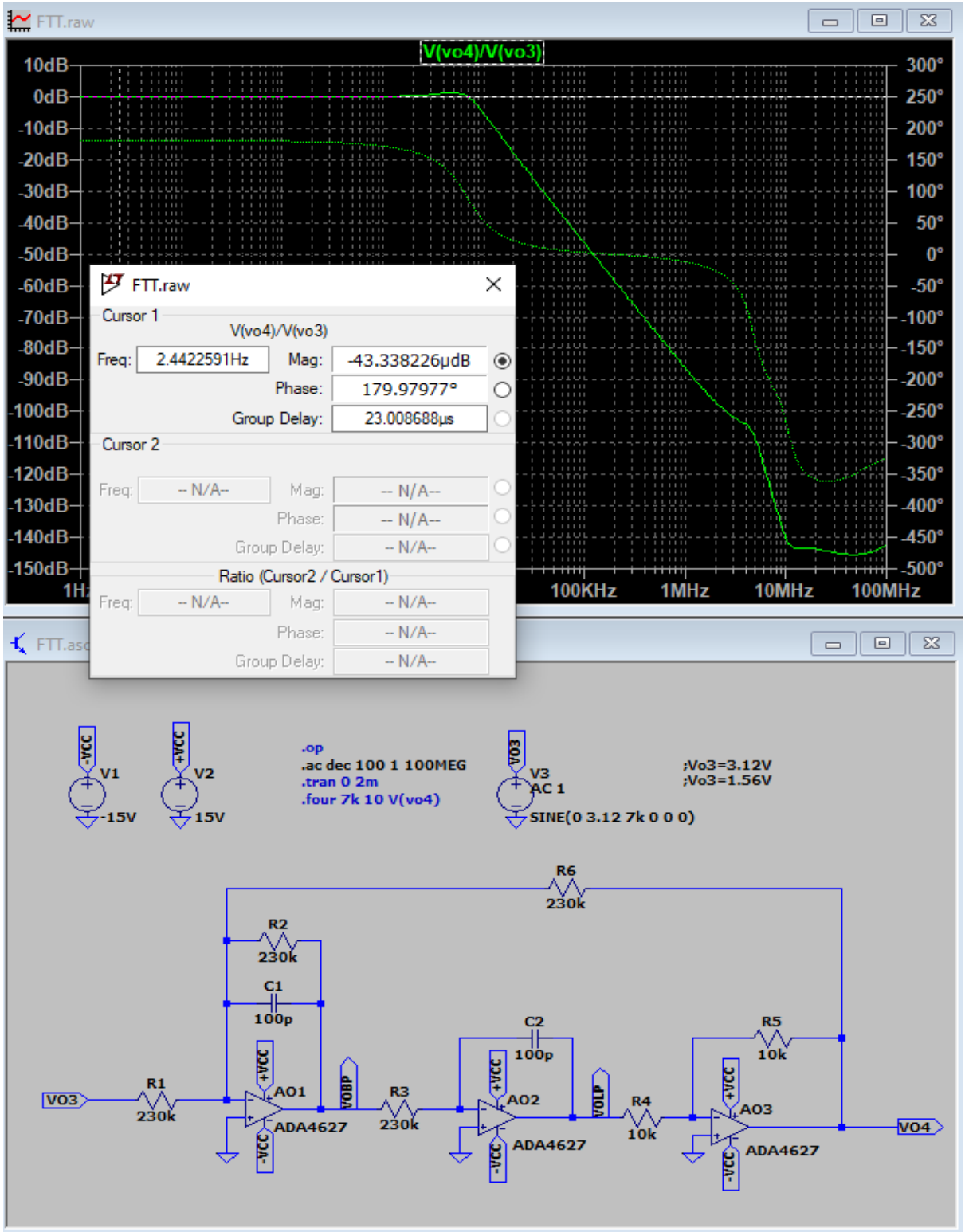

Figure 19. Filter gain

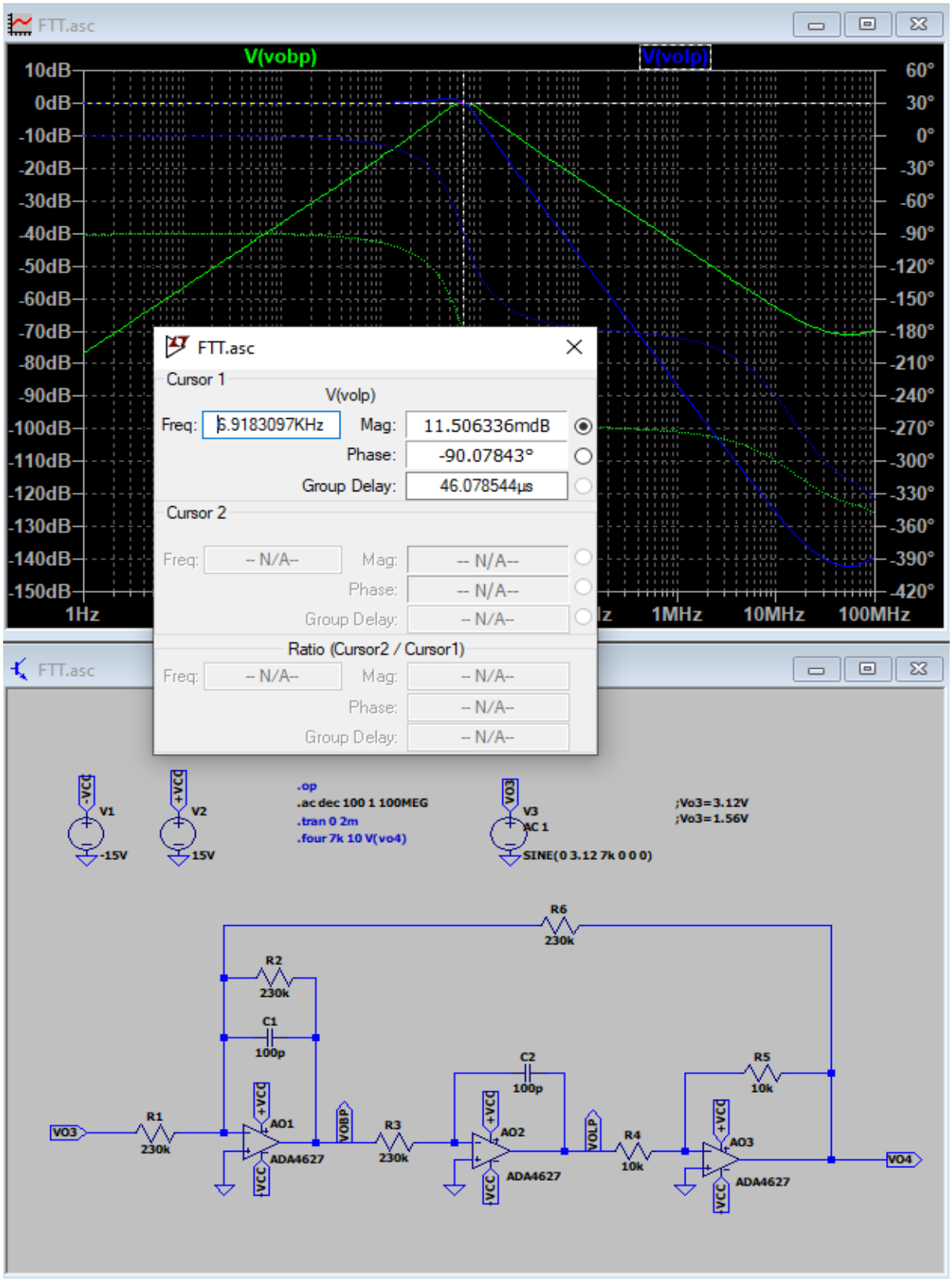

Figure 20. Filter band and bandpass gain (-90deg LPF)

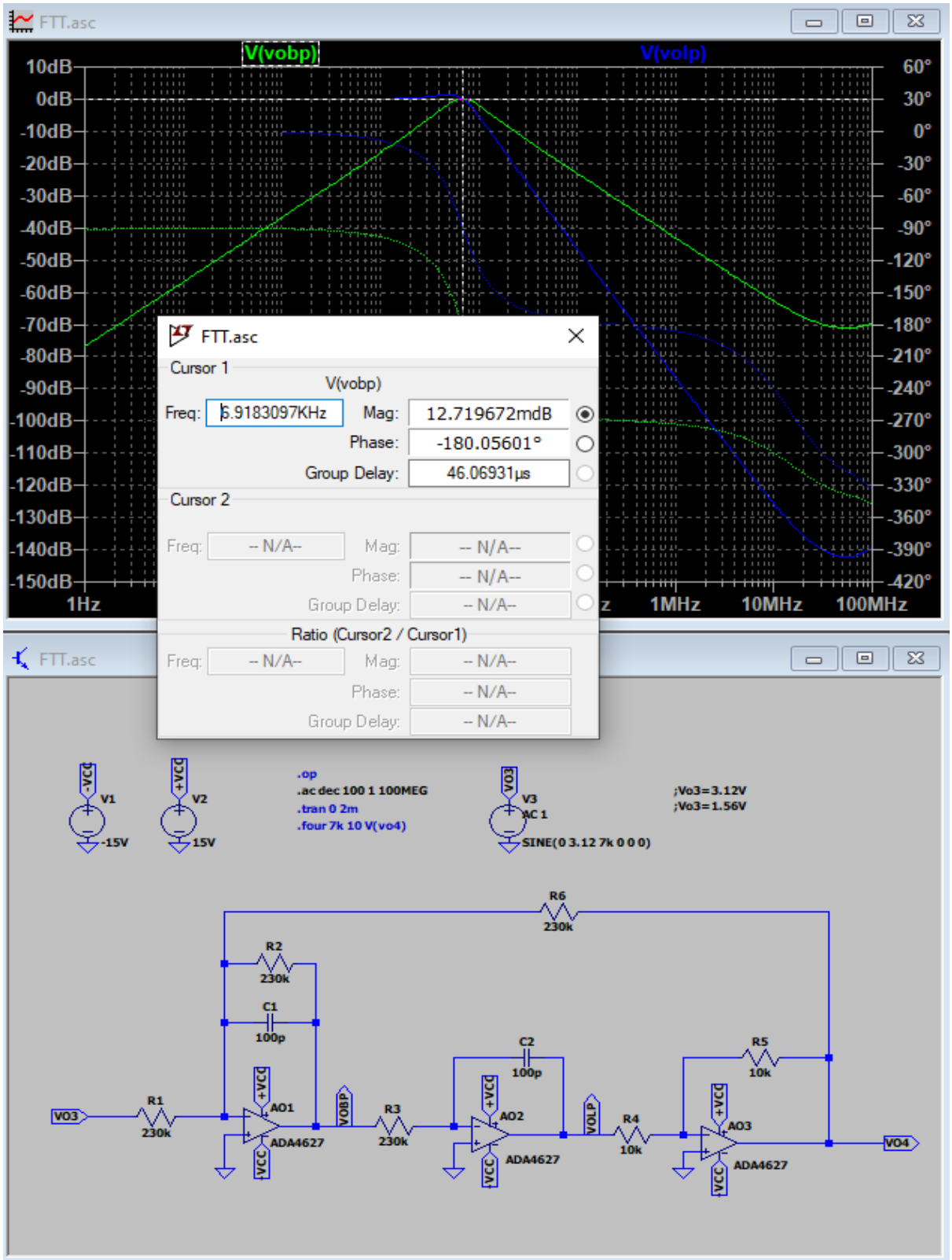

Figure 21. Filter band and bandpass gain (-180deg BPF)

3.2.3 Transient simulations

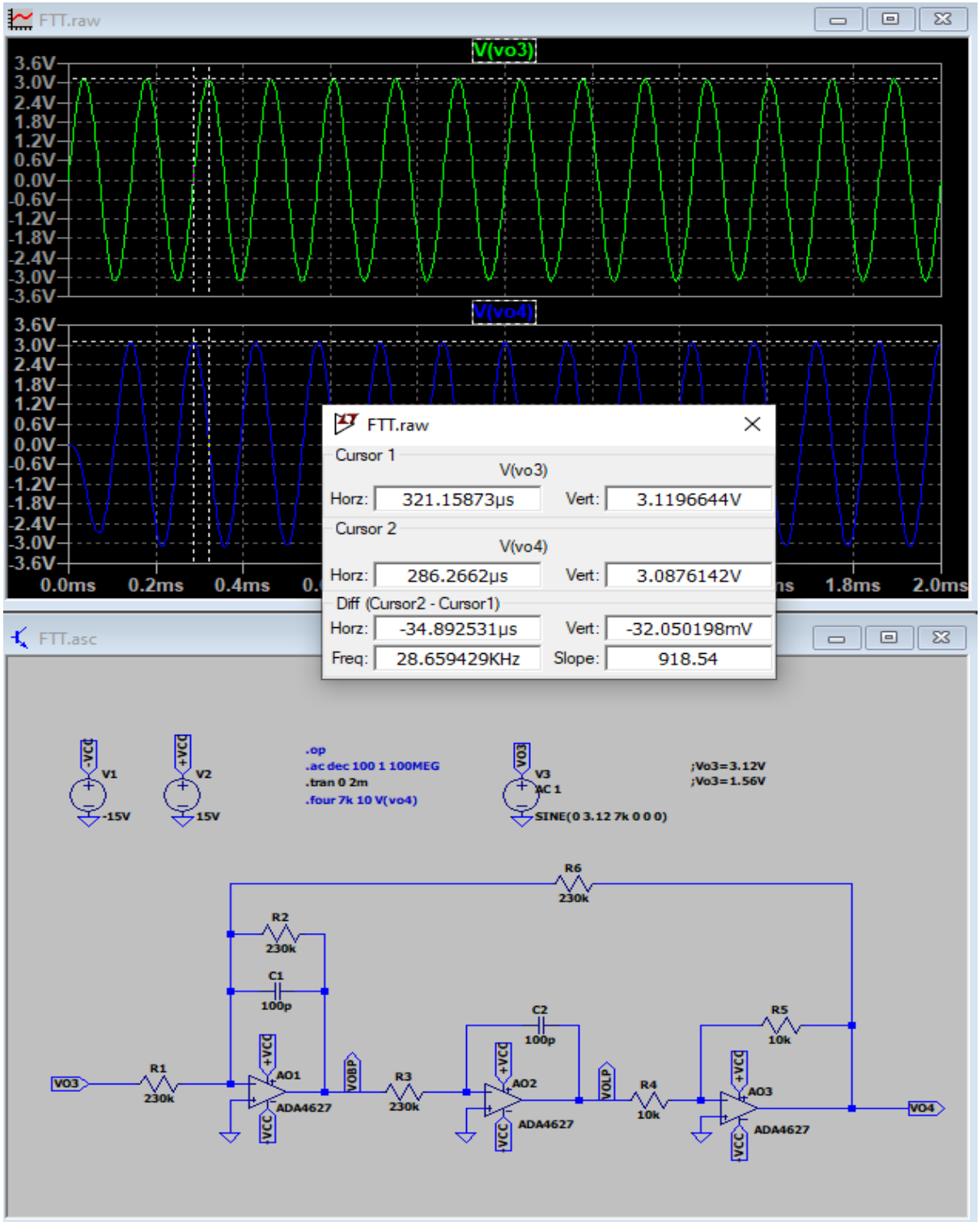

Figure 22. Large signal linearity ($\hat{v}_{04} = H_0 \cdot \hat{v}_{03}$ at $f_{max} = 7k$Hz)

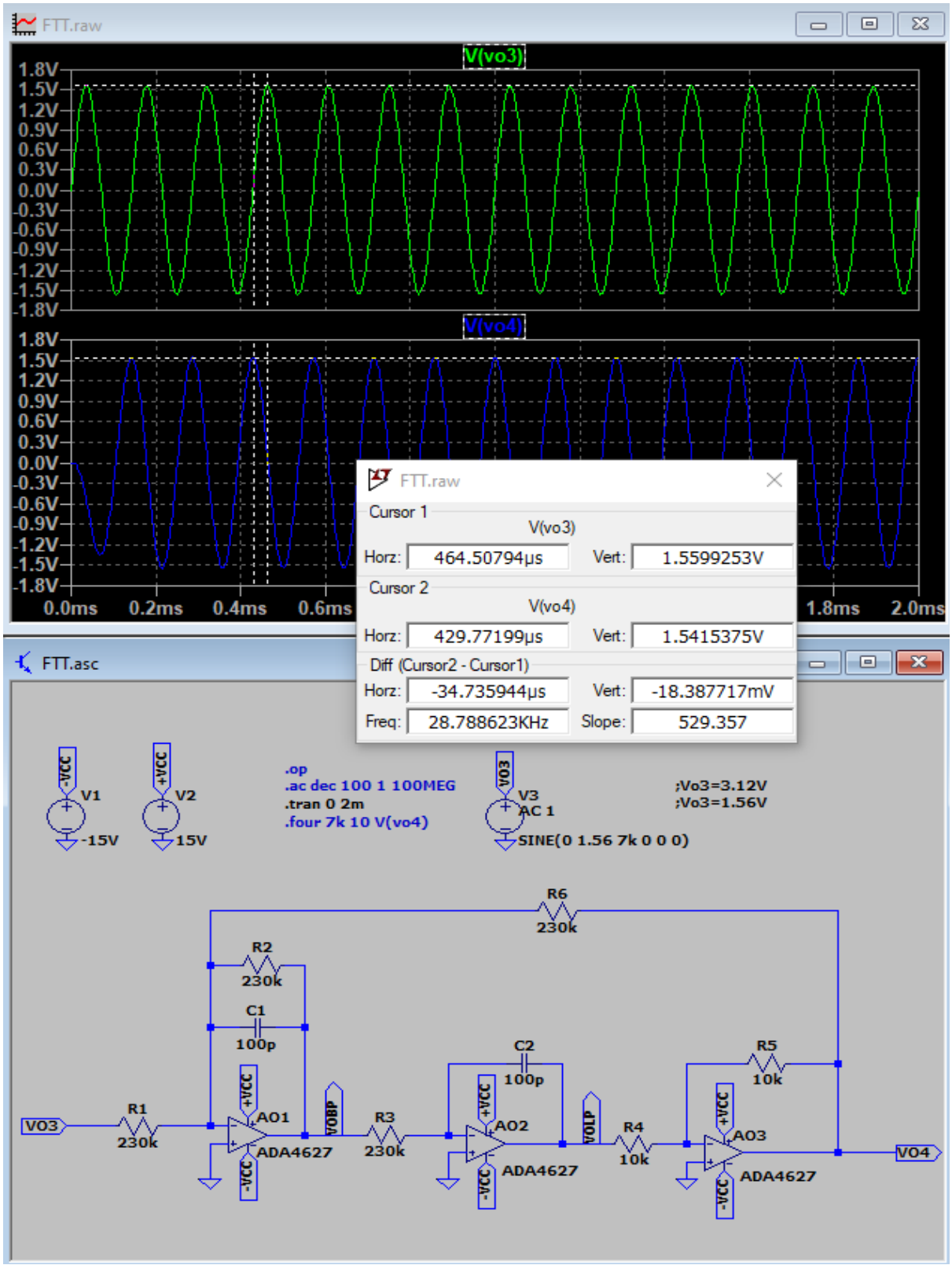

Figure 23. Small signal linearity ($\hat{v}_{04} = H_0 \cdot \hat{v}_{03}$ at $f_{max} = 7k$Hz)

3.3 Stage 3 simulations

3.3.1 DCOP simulations

D:\PROIECT SCIA\PGA.net

```
       --- Operating Point ---

V(-vcc):        -15             voltage
V(n001):        -0.000292311    voltage
V(n002):        -0.00033911     voltage
V(n004):        -0.000444412    voltage
V(vo4):         0               voltage
V(+vcc):        15              voltage
V(n003):        -0.00039176     voltage
V(vo5):         -0.000941694    voltage
V(n005):        -0.000292309    voltage
I(V1):          -2.92311e-08    device_current
I(R7):          -2.92495e-08    device_current
I(R8):          -2.92502e-08    device_current
I(R10):         -2.92519e-08    device_current
I(V3):          -0.00689891     device_current
I(R6):          -2.92311e-08    device_current
I(R9):          -2.9251e-08     device_current
I(V2):          0.00689894      device_current
```

Figure 24. DC operating point

3.3.2 AC simulations

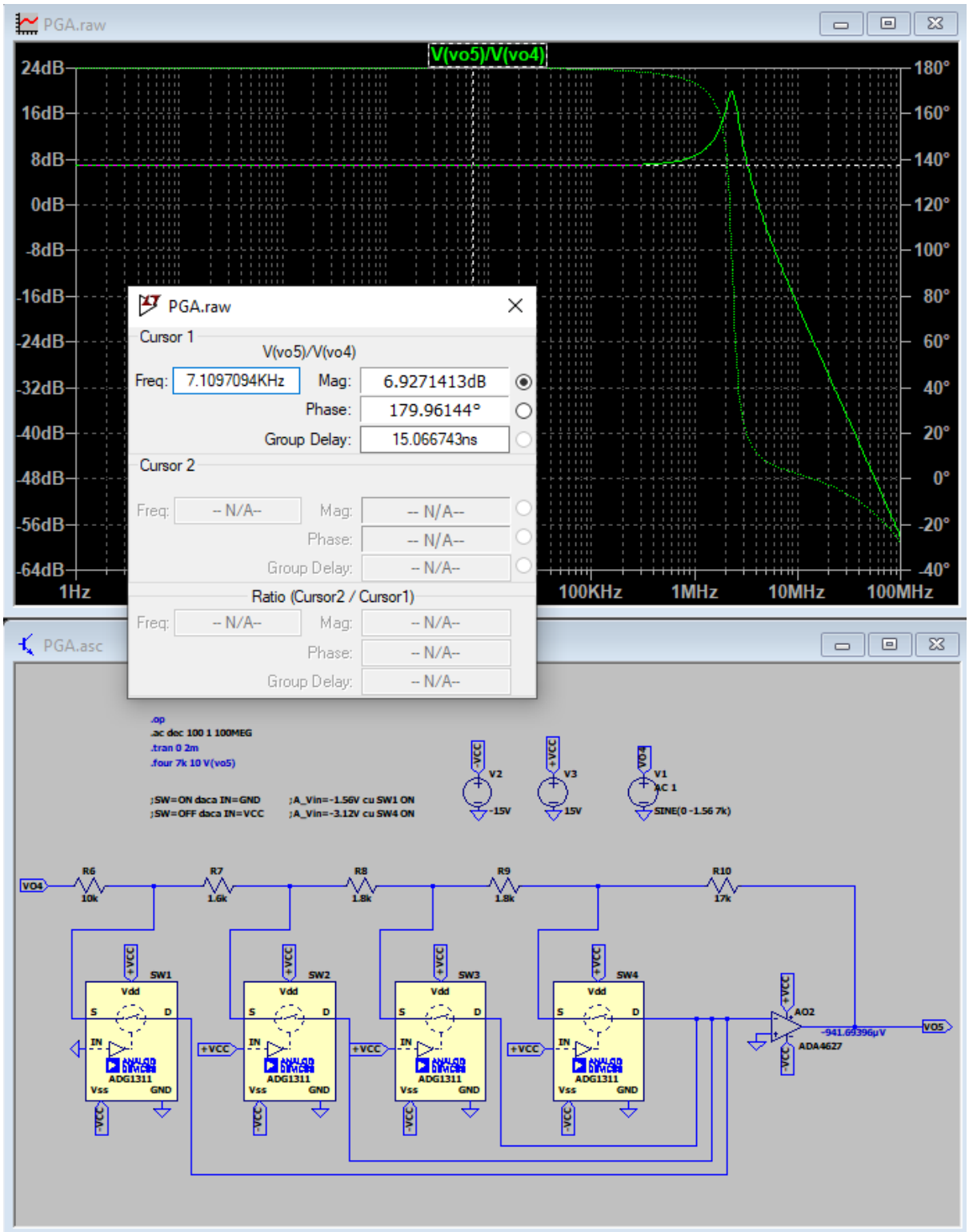

Figure 25. 7dB gain

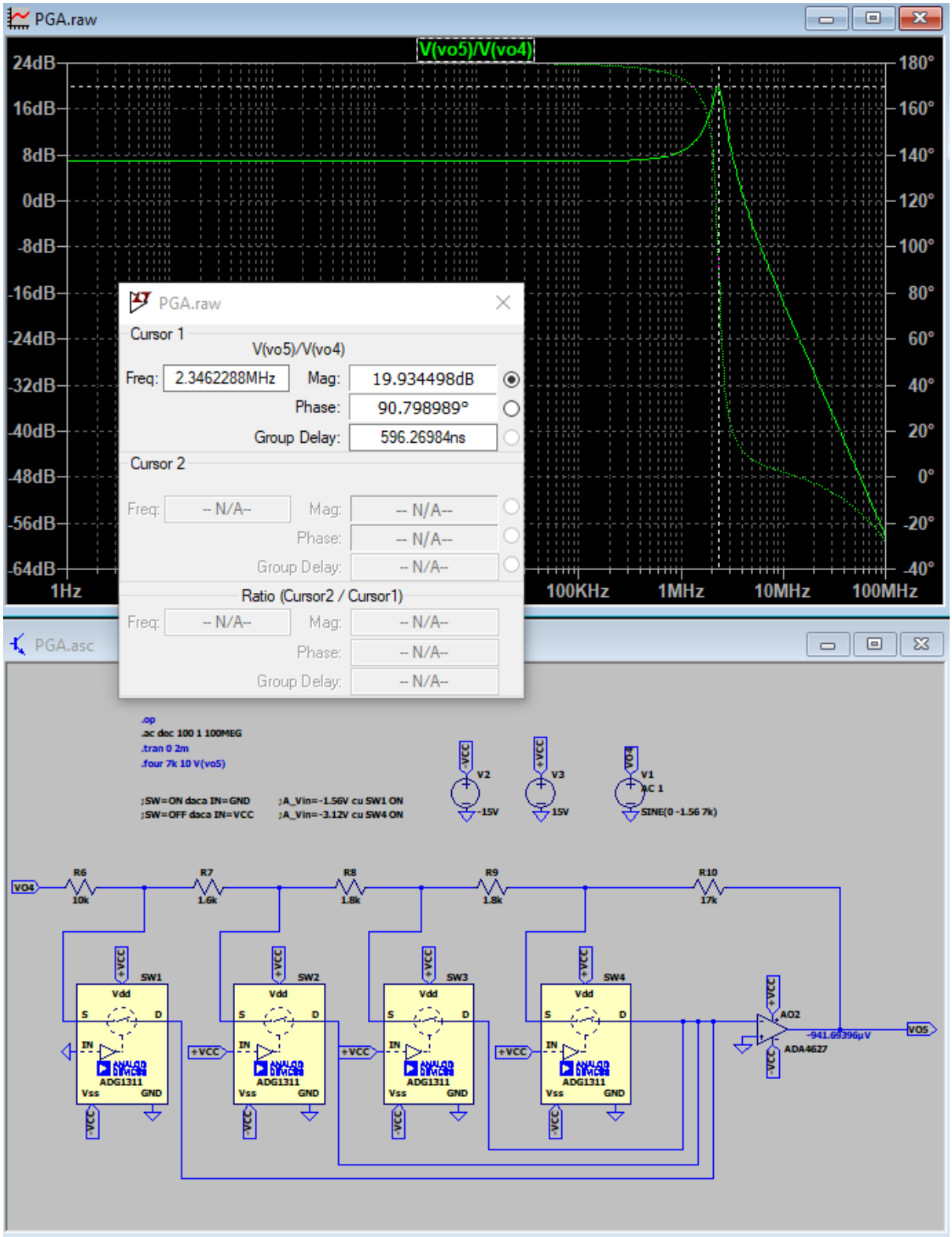

Figure 26. Bandwidth for 7dB gain

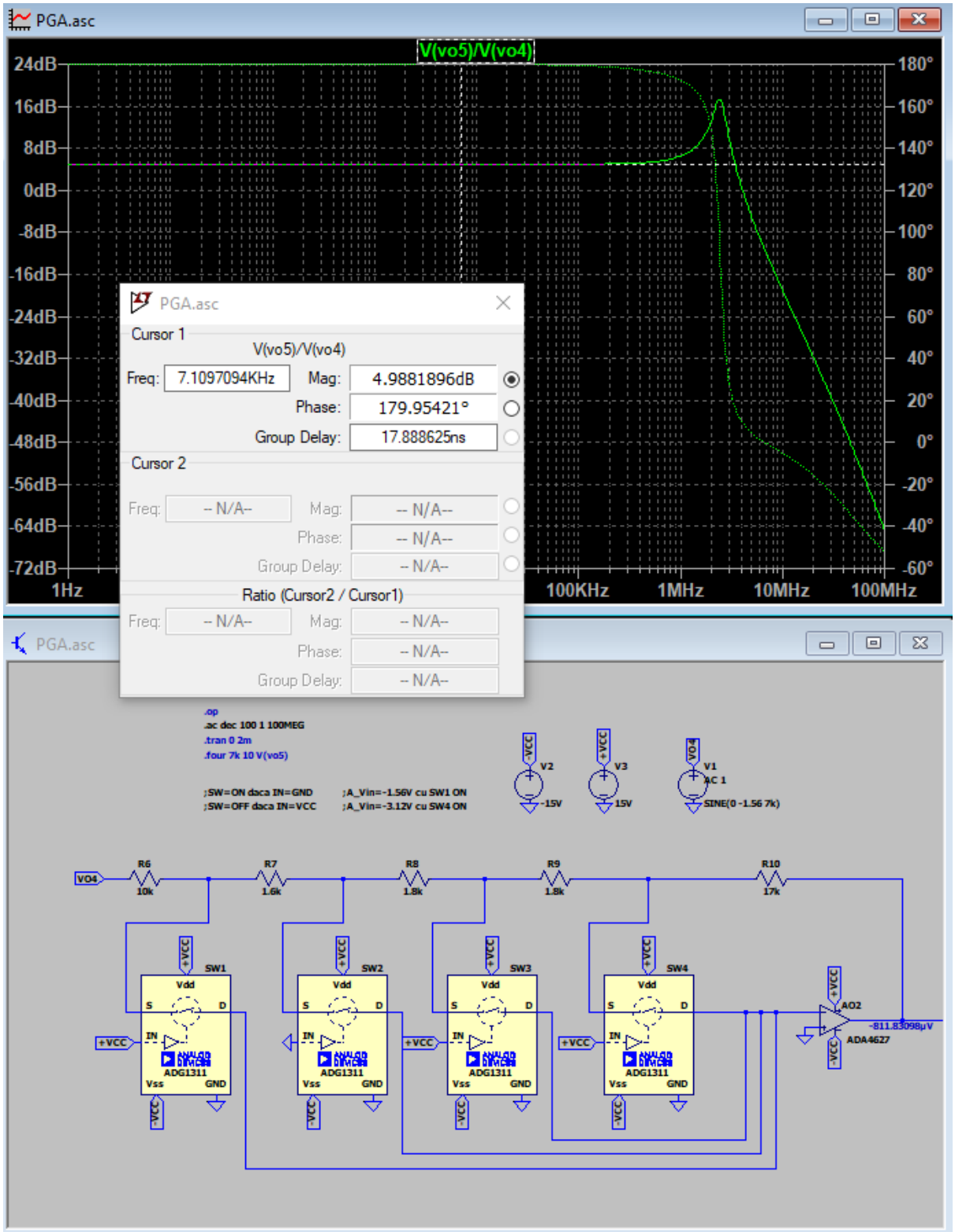

Figure 27. 5dB gain

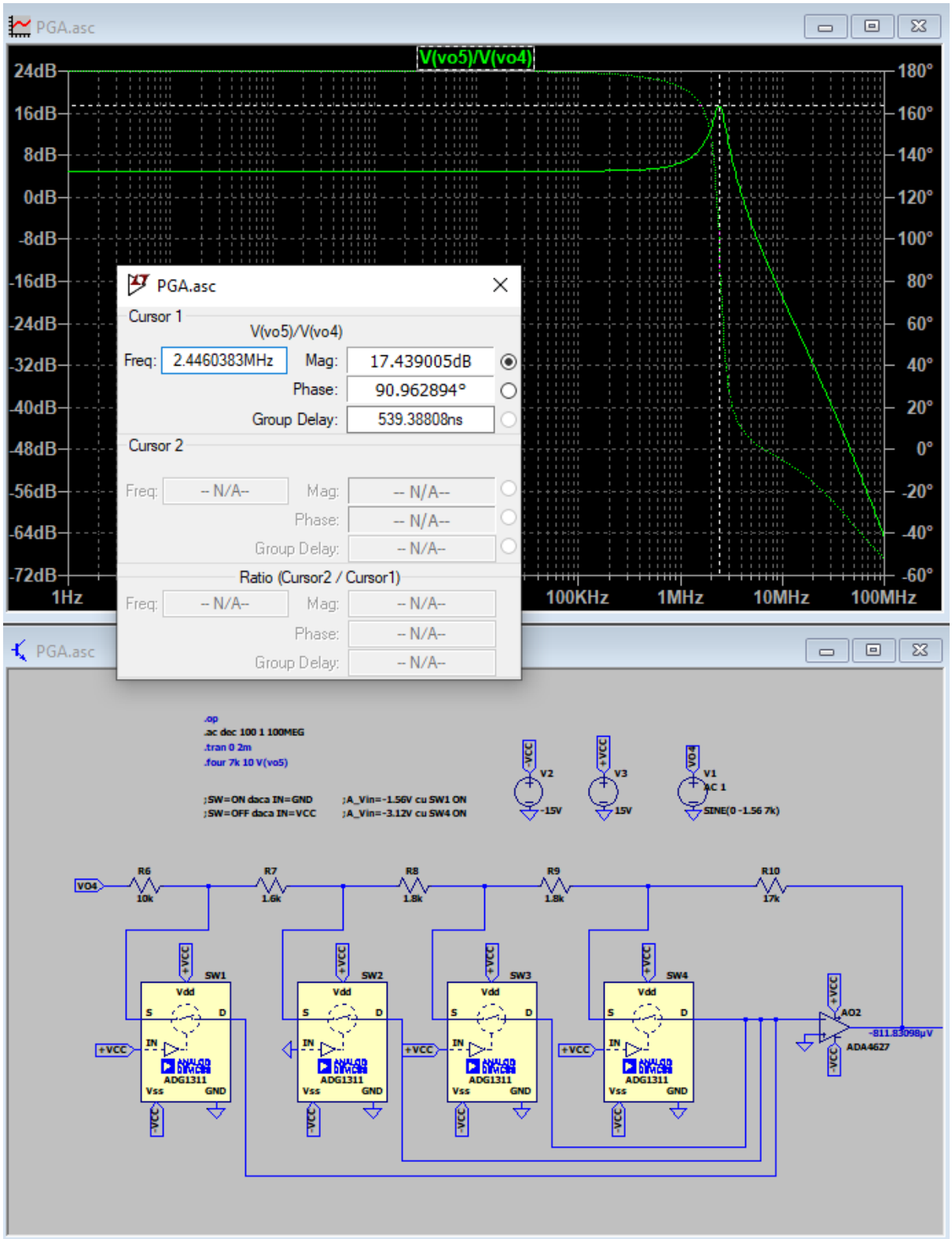

Figure 28. Bandwidth for 5dB gain

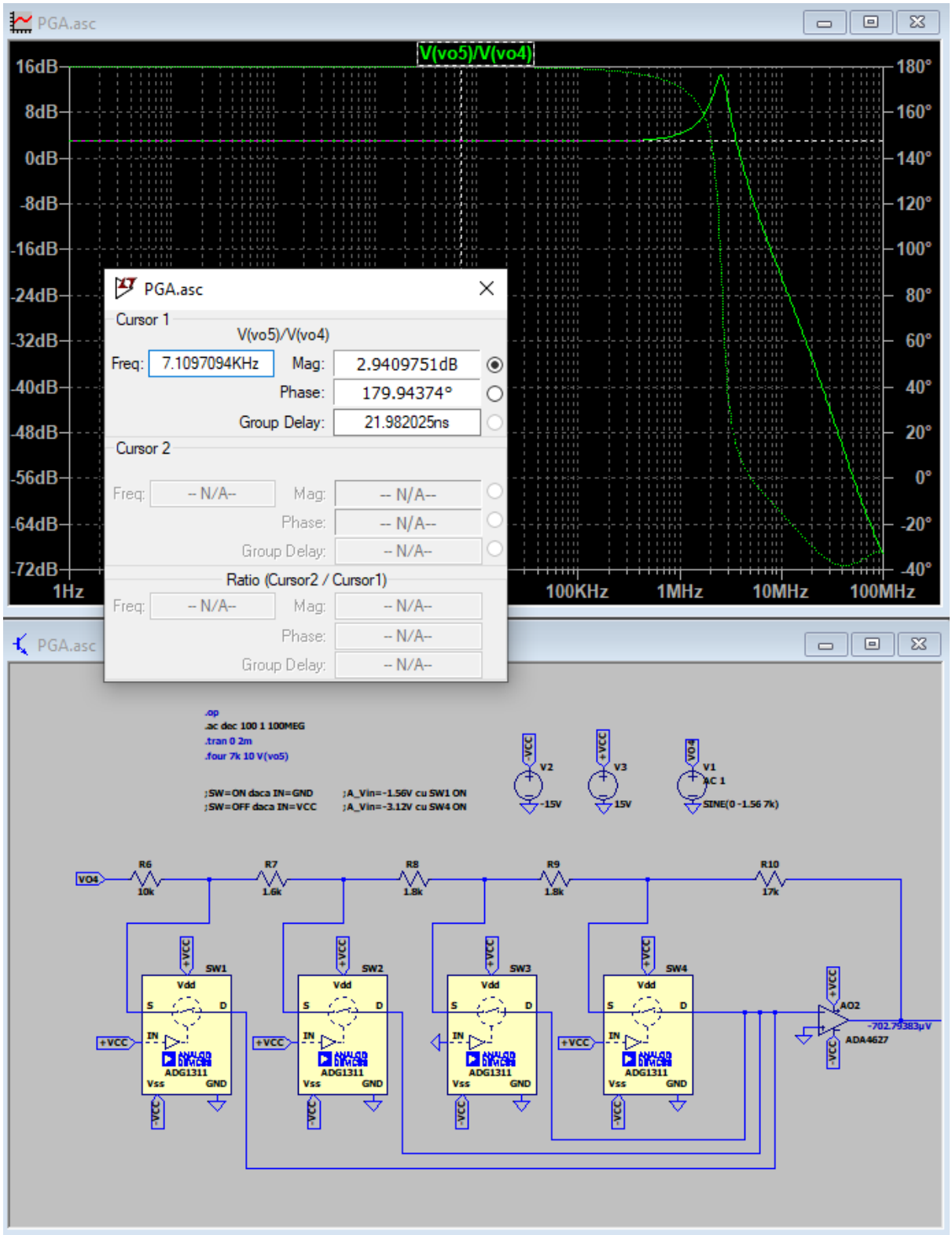

Figure 29. 3dB gain

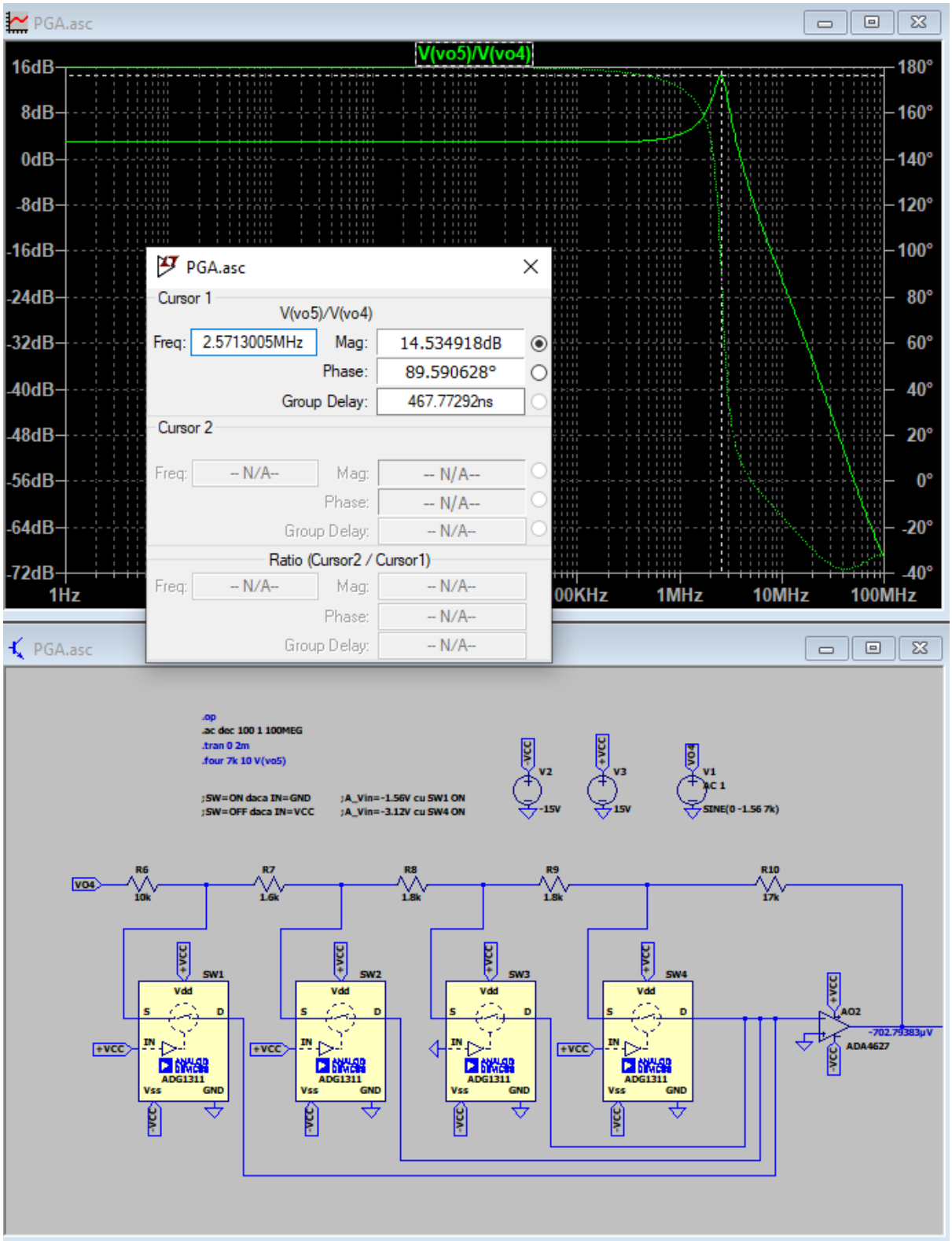

Figure 30. Bandwidth for 3dB gain

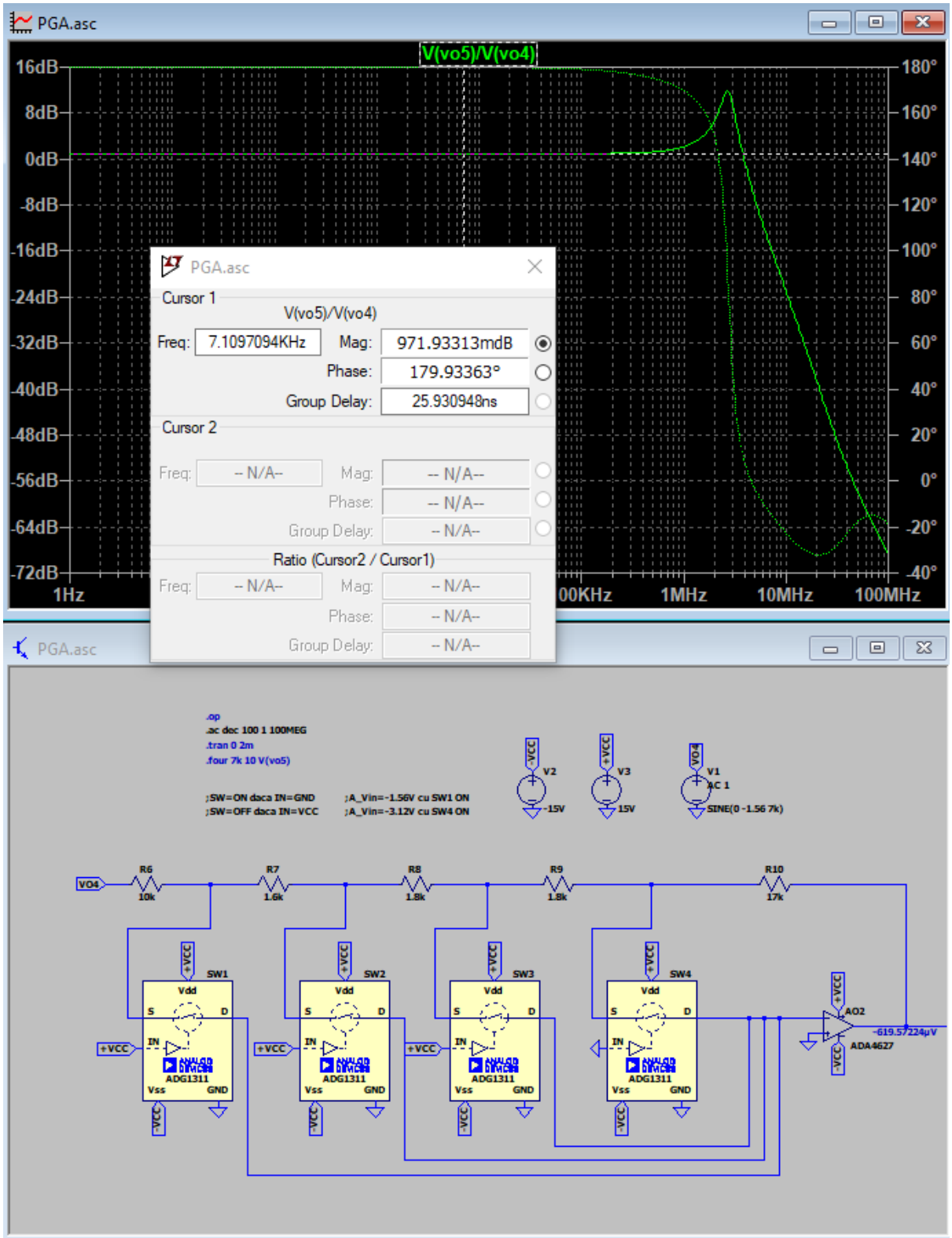

Figure 31. 1dB gain

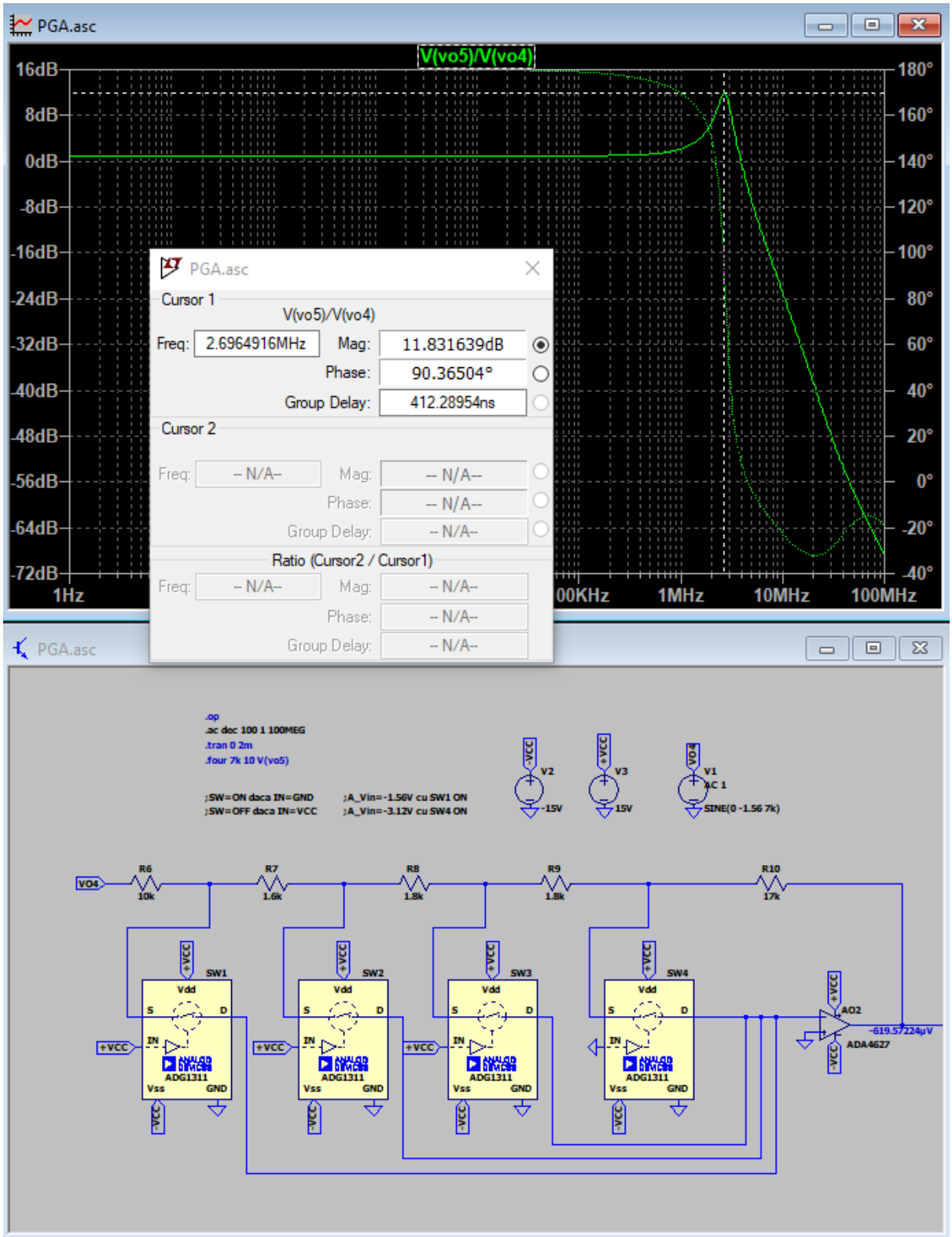

Figure 32. Bandwidth for 1dB gain

3.3.3 Transient simulations

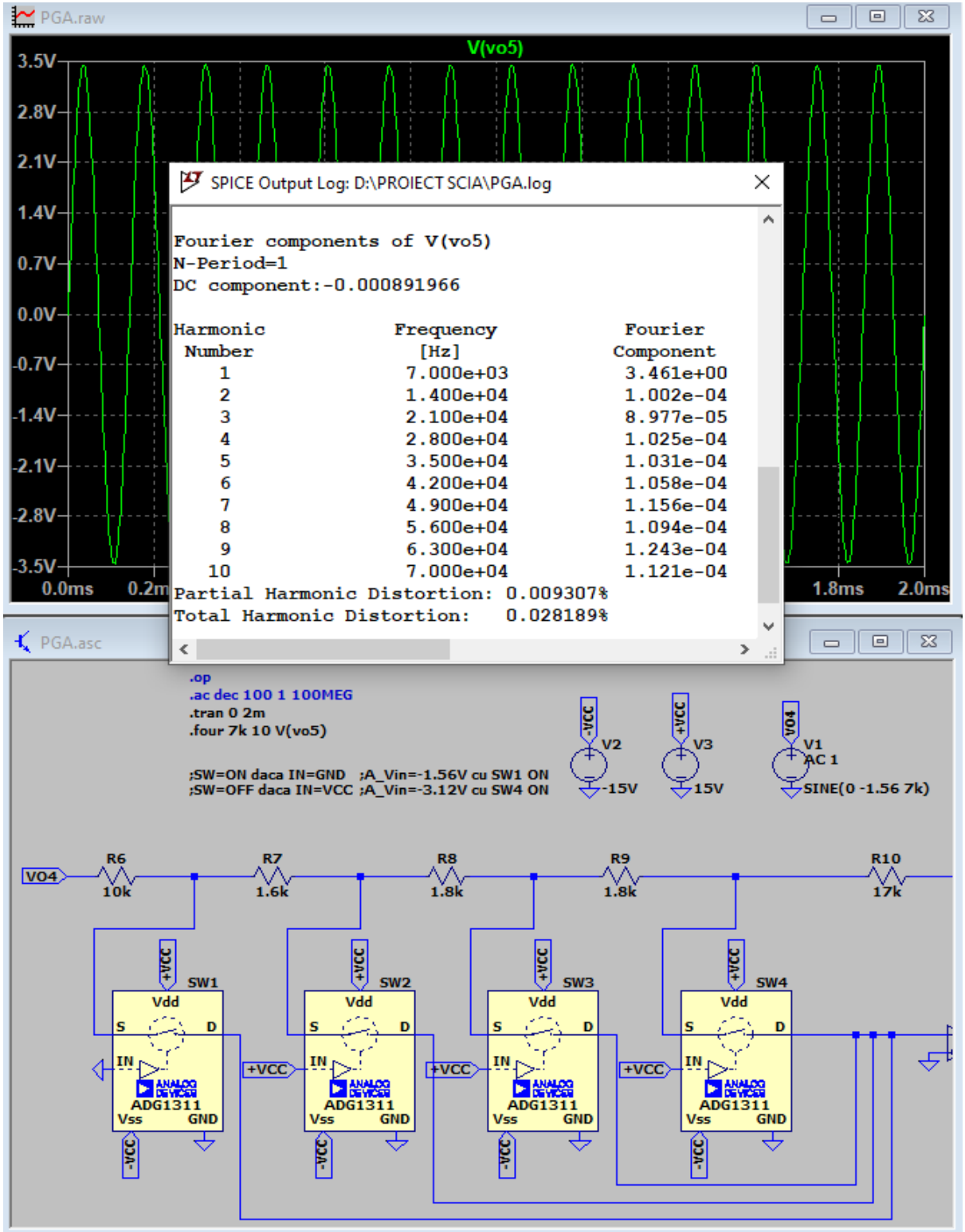

Figure 33. THD (small signal and maximum PGA gain)

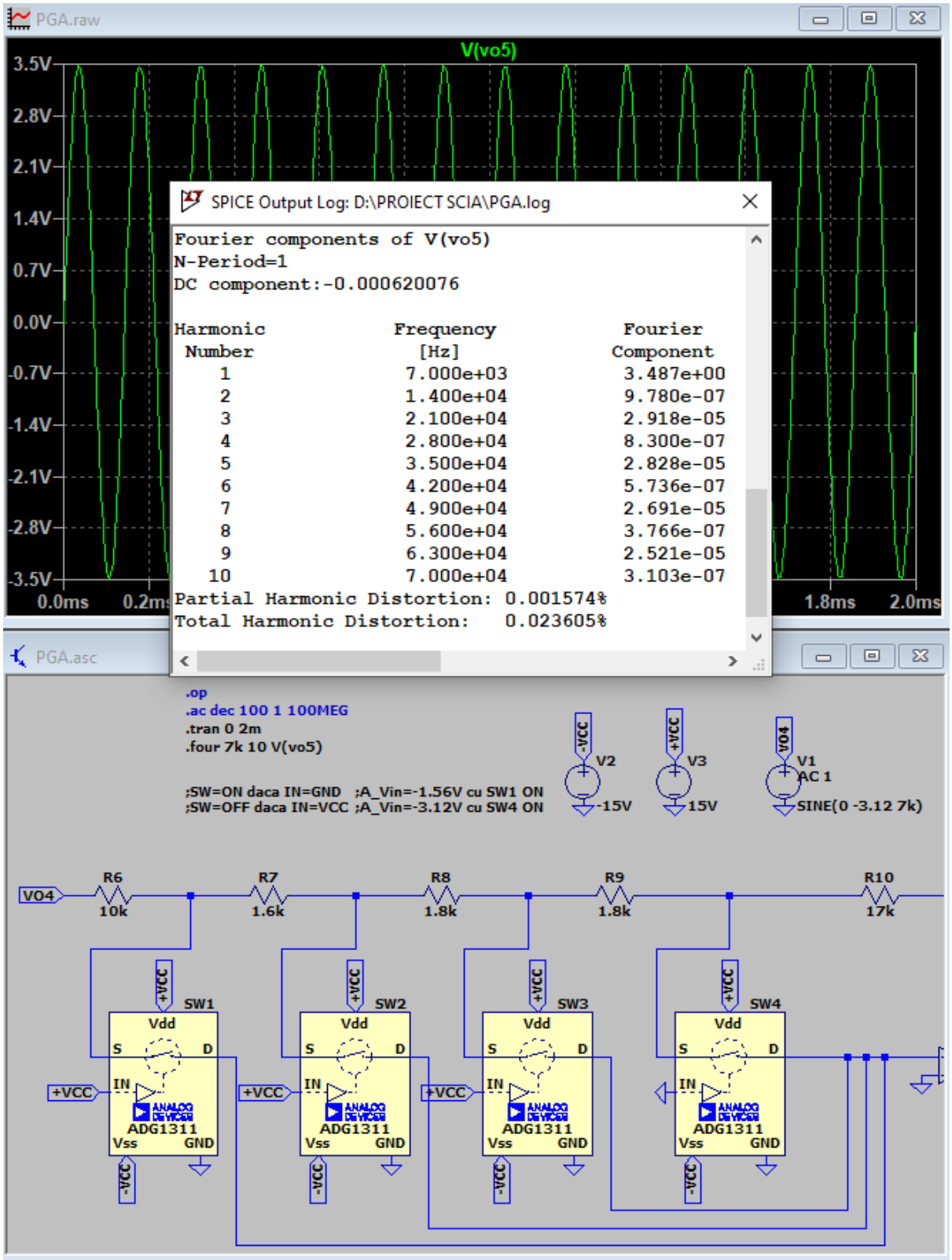

Figure 34. THD (large signal and minimum PGA gain)

3.4 Stage 4 simulations

3.4.1 DCOP simulations

D:\PROIECT SCIA\FWR.net

```
       --- Operating Point ---

V(n001):        -0.000292311   voltage
V(-vcc):        -15            voltage
V(voao8):       -0.000524806   voltage
V(n002):        -0.000292313   voltage
V(vo5):         0              voltage
V(+vcc):        15             voltage
V(n003):        -1.39932e-09   voltage
V(vo6):         -0.000292331   voltage
I(V1):          0.0137971      device_current
I(R1):          -1.39932e-11   device_current
I(D1):          1.29626e-11    device_current
I(C1):          -2.56094e-32   device_current
I(V3):          1.50235e-11    device_current
I(R2):          -2.56094e-12   device_current
I(R3):          -1.80153e-11   device_current
I(D2):          -2.90167e-11   device_current
I(V2):          -0.0137971     device_current
```

Figure 35. DC operating point

3.4.2 Transient simulations

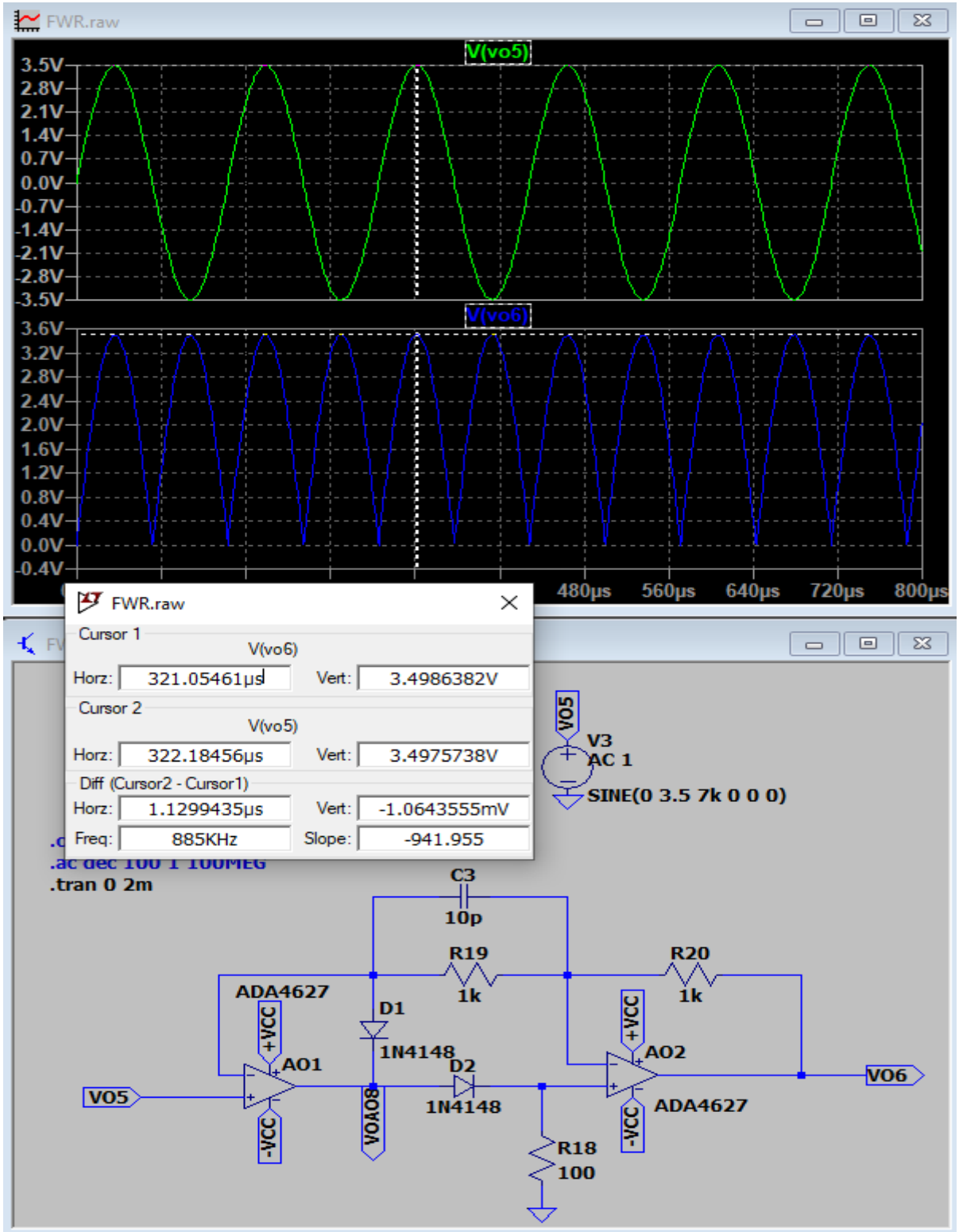

Figure 36. Circuit function

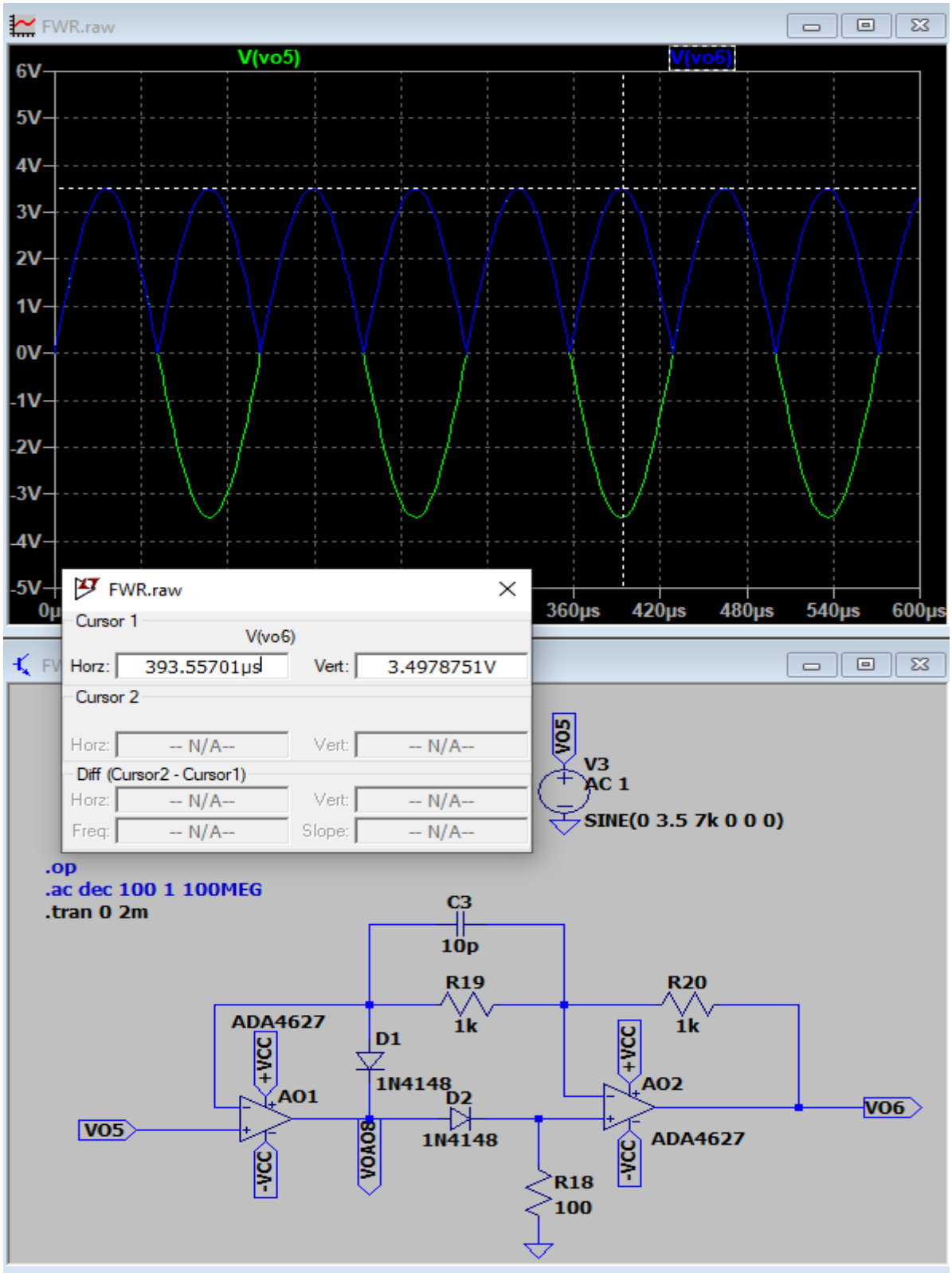

Figure 37. Circuit function

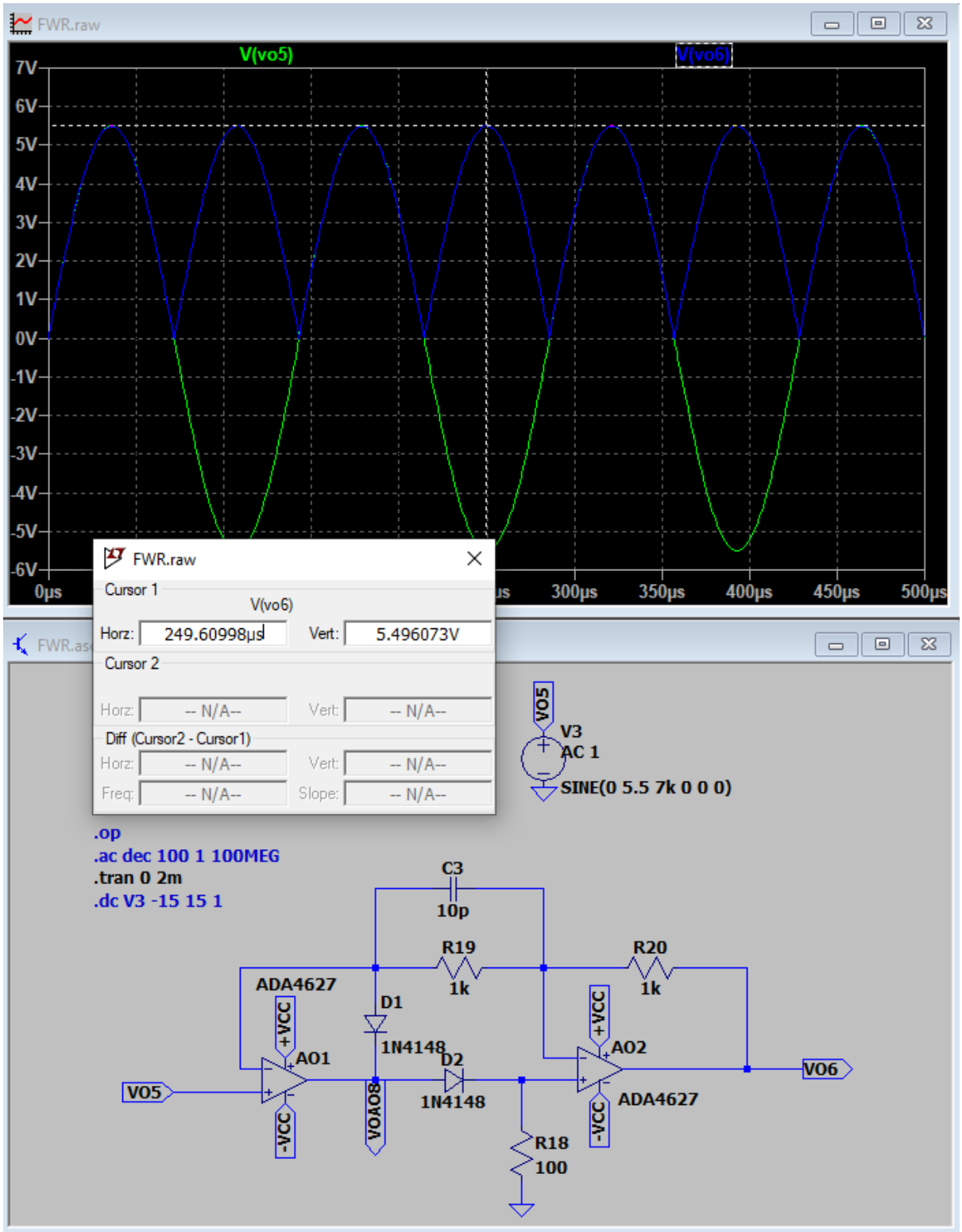

Figure 38. 5.5V maximum “positive” input signal amplitude

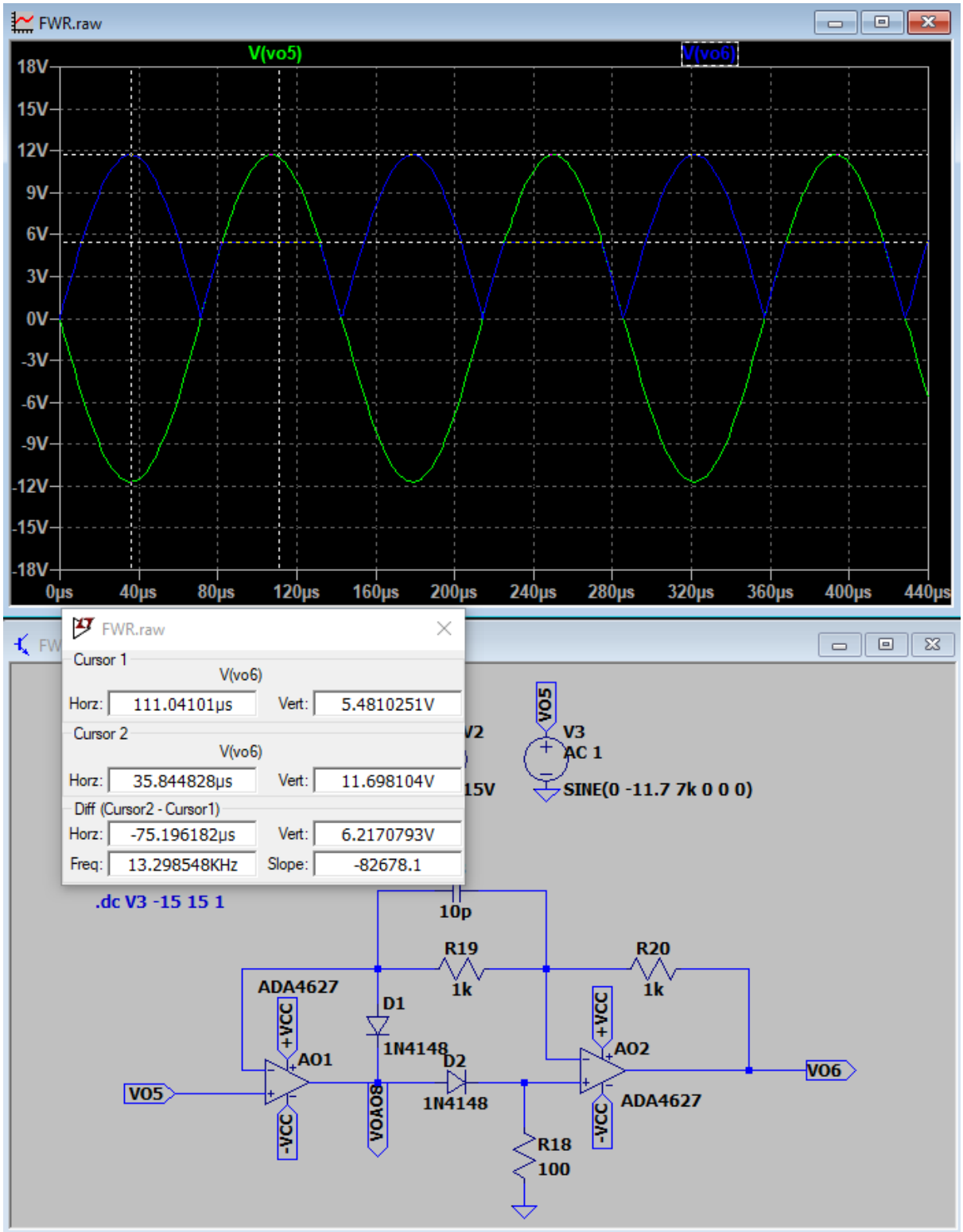

Figure 39. -11.7V maximum “negative” input signal amplitude

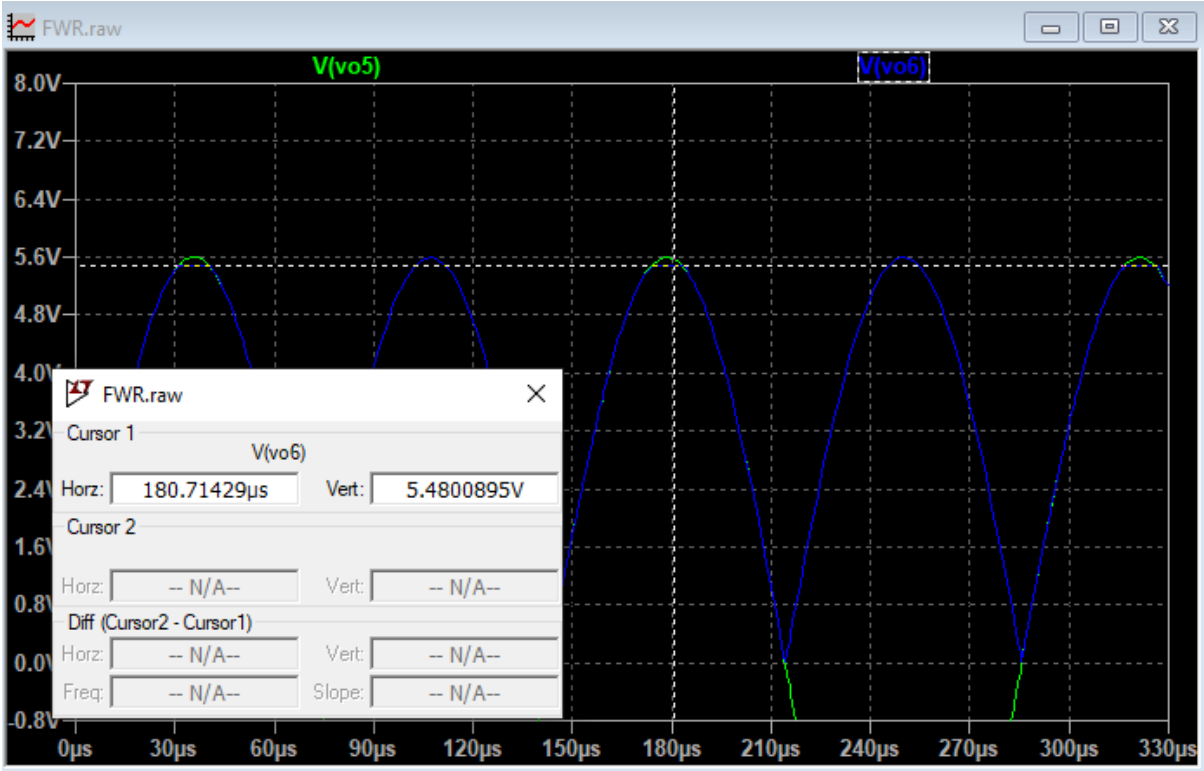

Figure 40. Distorsions for input signal with 5.6V amplitude

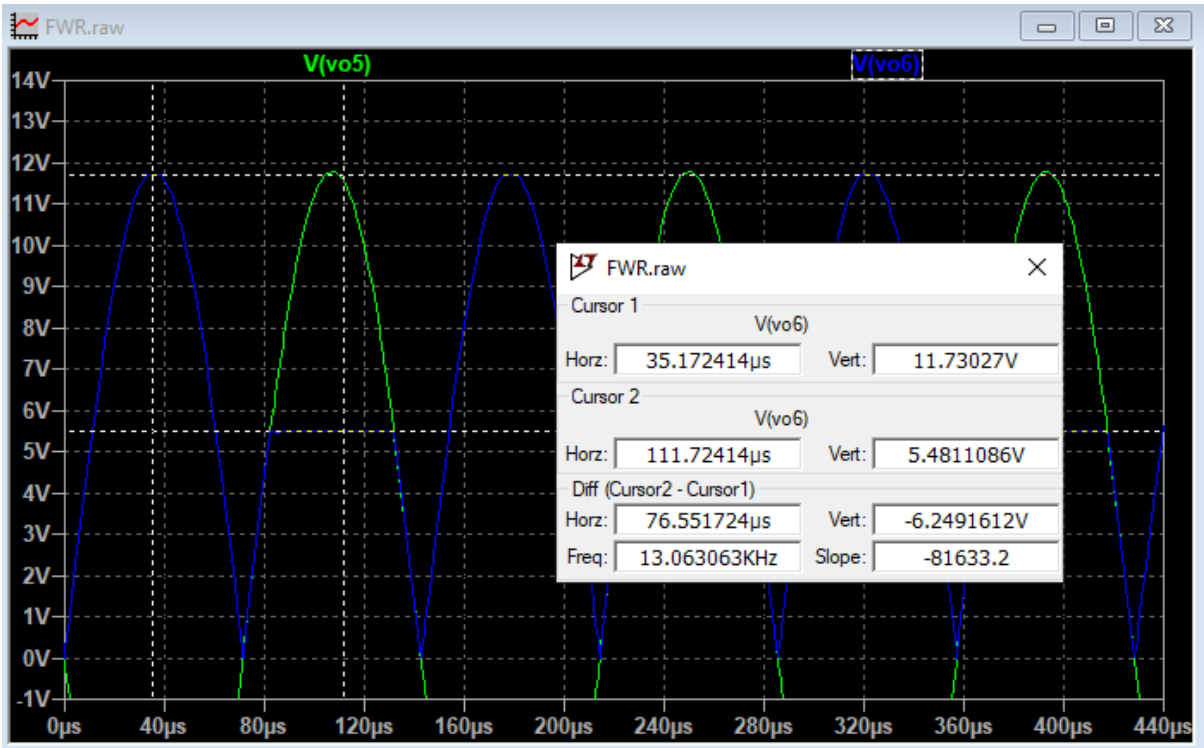

Figure 41. Distorsions for input signal with -11.8V amplitude

According to the transient simulations in figures 40 and 41, the maximum input voltage range for each alternation emerges. Rectification on the positive alternation is done without distortion for amplitudes up to 5.5 V. Rectification on the negative alternation is done without distortion for amplitudes down to -11.7 V, but causes distortion of the positive alternation. Therefore, for correct rectification without any distortions, the maximum amplitude of the input signal must not exceed 5.5V (11 Vpp).

Please note: All these limitations are set for a 100Ω load at the VOAO8 output.

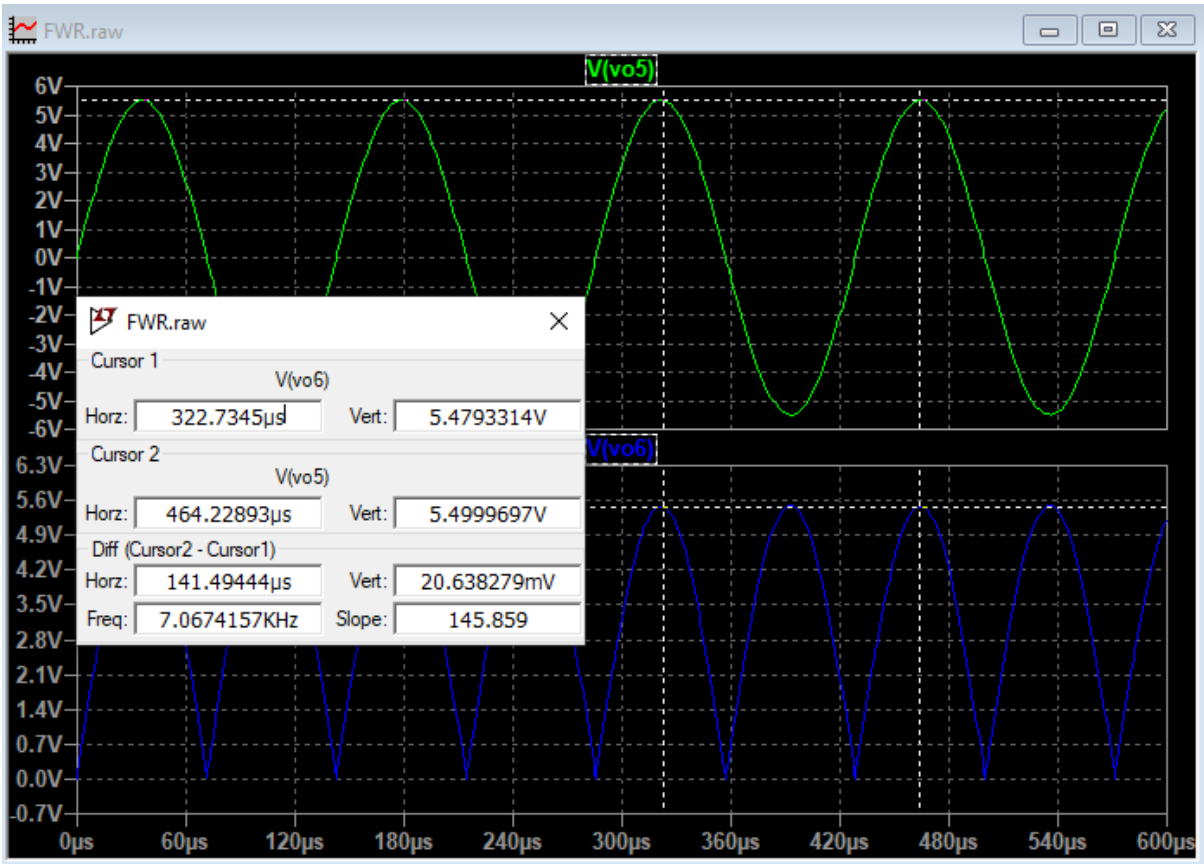

Figure 42. Maximum input voltage amplitude for no distorsions to occur

.

3.4.3 DC Sweep simulations

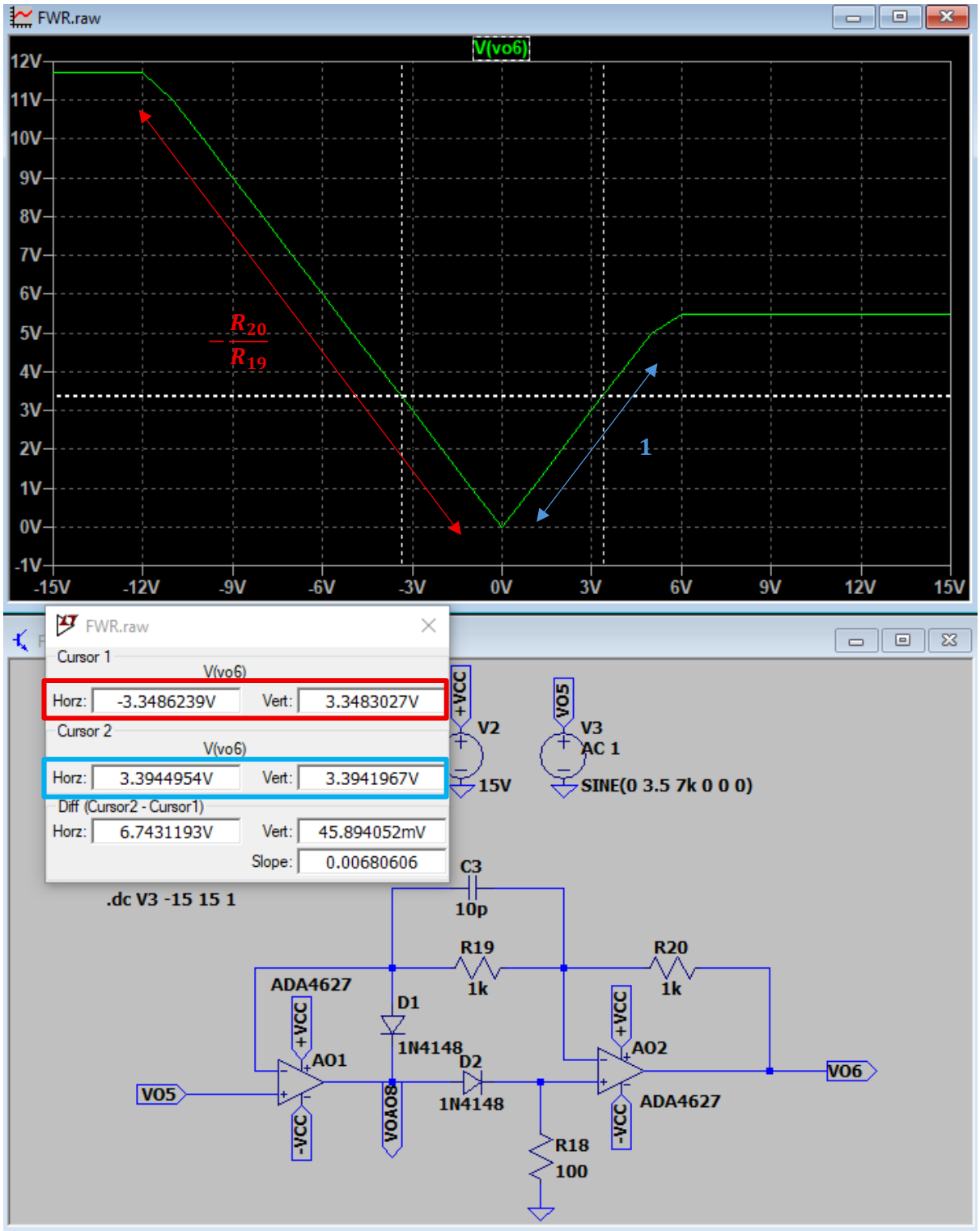

Figure 43. Voltage transfer static characteristic

4. Practical implementation

4.1 Stage 1

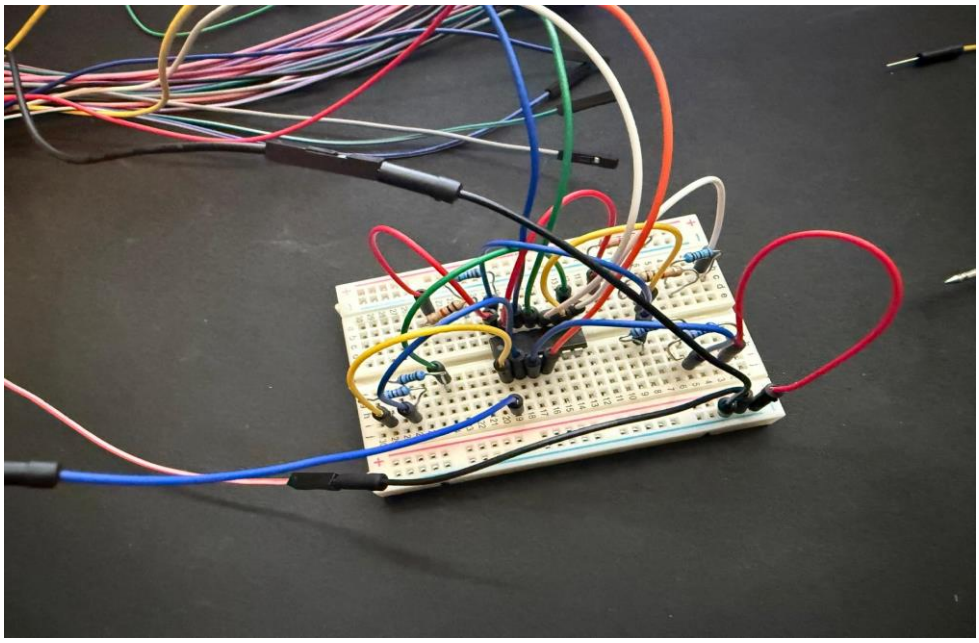

Figure 44. Stage 1 on breadboard implementation (side view)

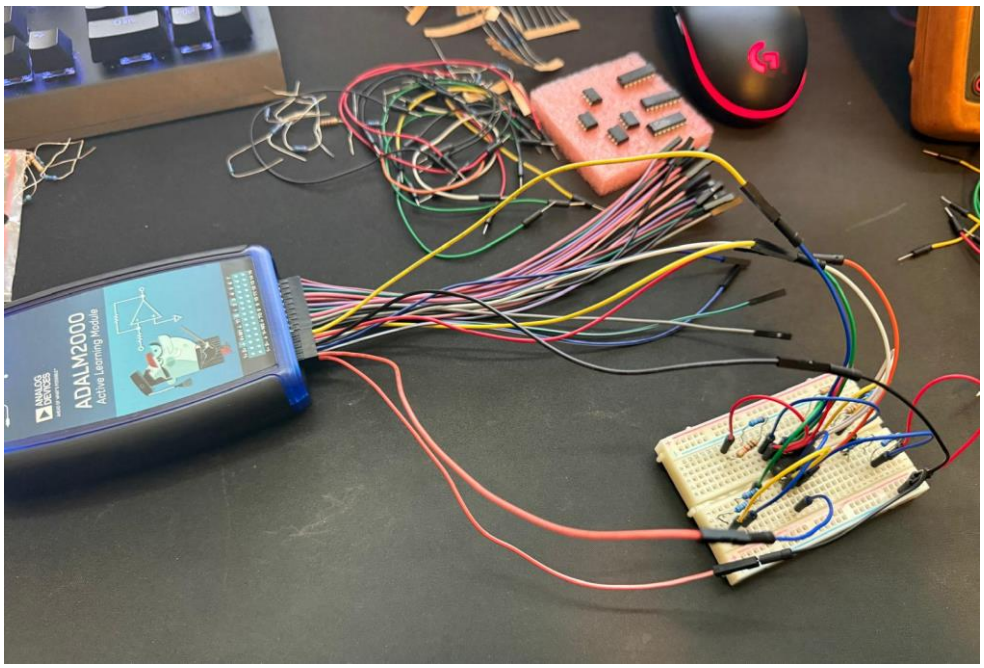

Figure 45. Stage 1 on breadboard implementation (distant view)

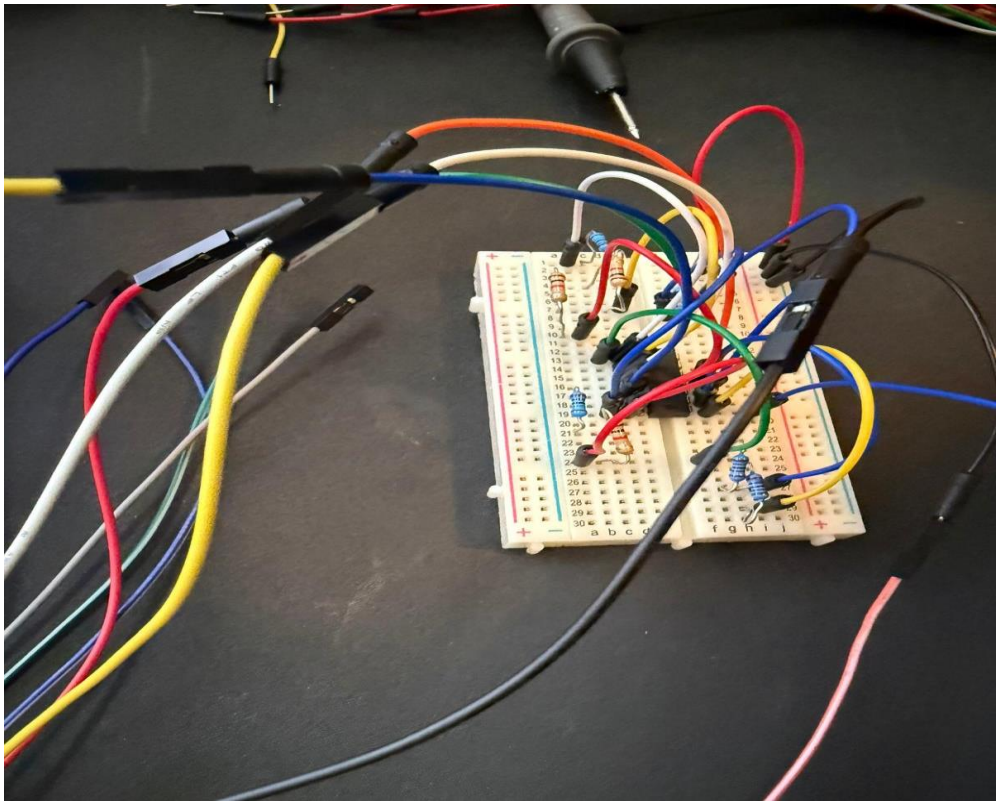

Figure 46. Stage 1 on breadboard implementation (upper view)

Figure 47. Output voltage when differential input voltage amplitude is maximum

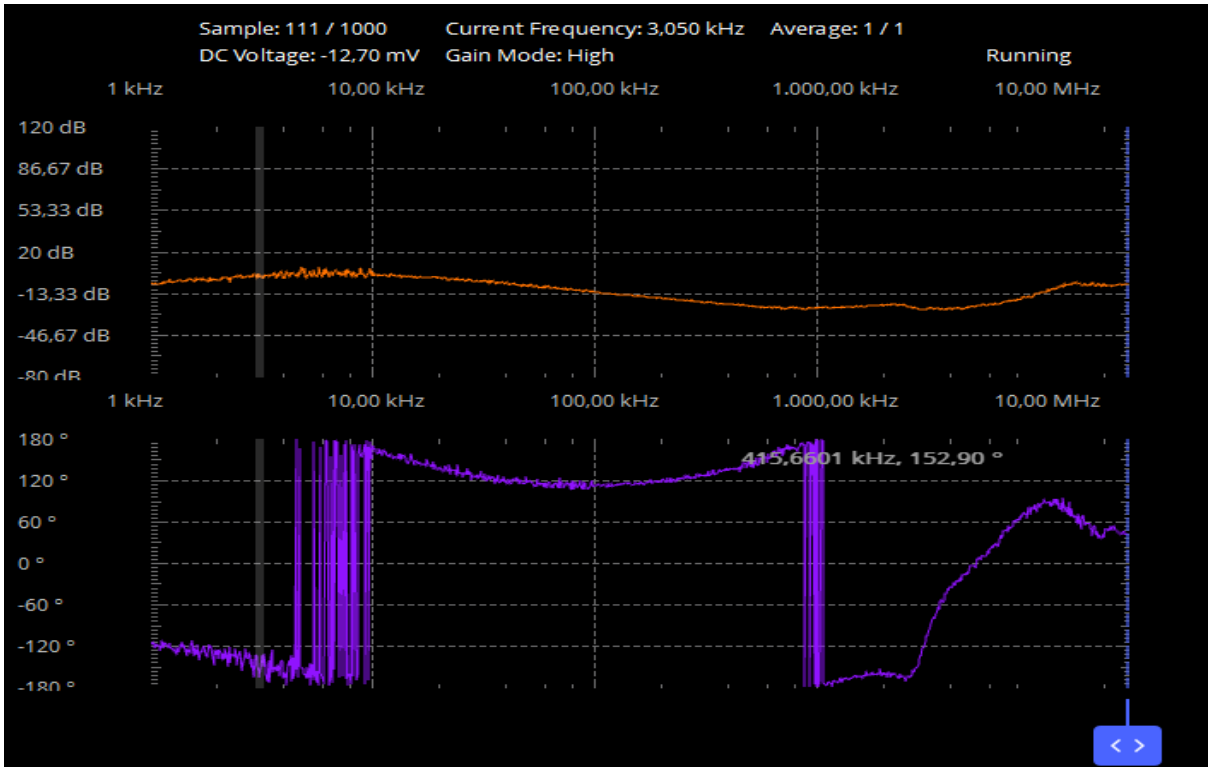

Figure 48. Bode characteristics

Because in LTSpice the circuit was simulated with a high-precision and high-speed ADA4627 operational amplifier and a different power supply, and for the practical implementation of the same circuit a much slower and much less precise operational amplifier OP482 was used, it does not behave as we would expect, as can be seen in Figure 48. However, a gain of approximately 15dB at a frequency of 7kHz is obtained, no parameters obtained in LTSpice can be extracted from here because we did not obtain a good frequency characteristic.

Figure 49. Output voltage when differential input voltage amplitude is maximum and step-type

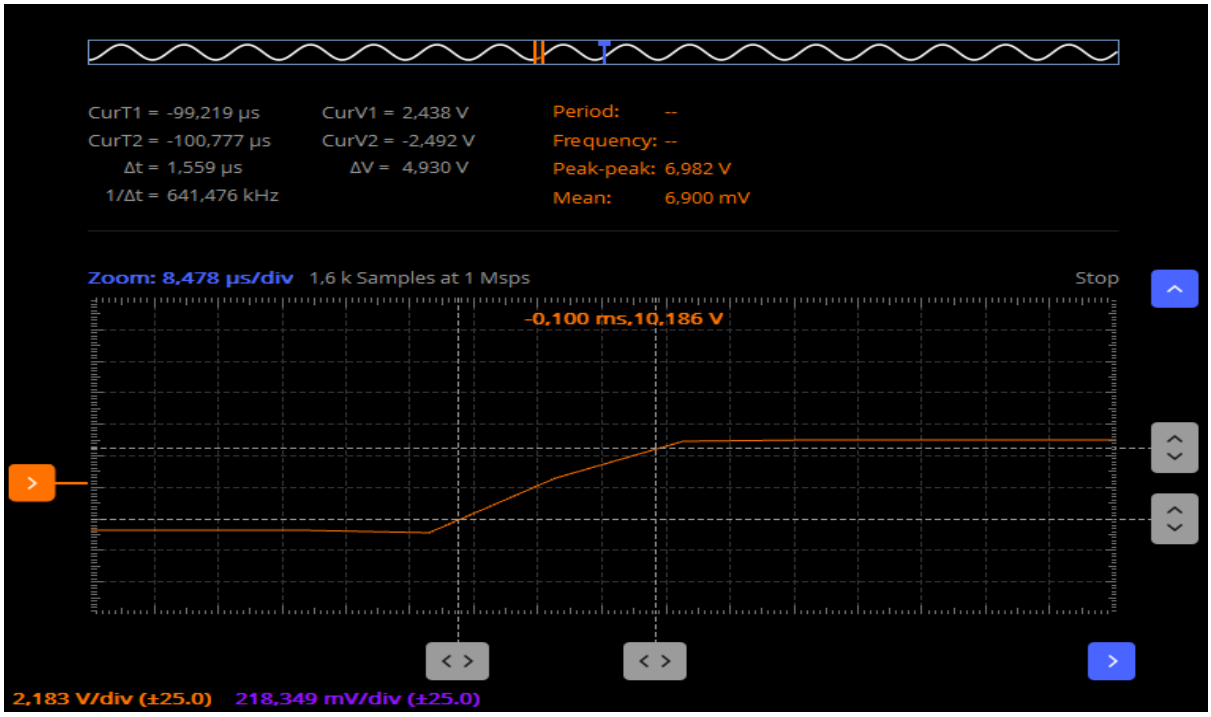

Figure 50. Output voltage slew rate

If we apply a step-type signal with very small rise and fall times (ns) to the input, figure 50 shows a slew rate of approximately 3V/µs..

SR = **ΔV/ΔT** = 5V/1.6µs = 3.125V/µs

4.2 Stage 2

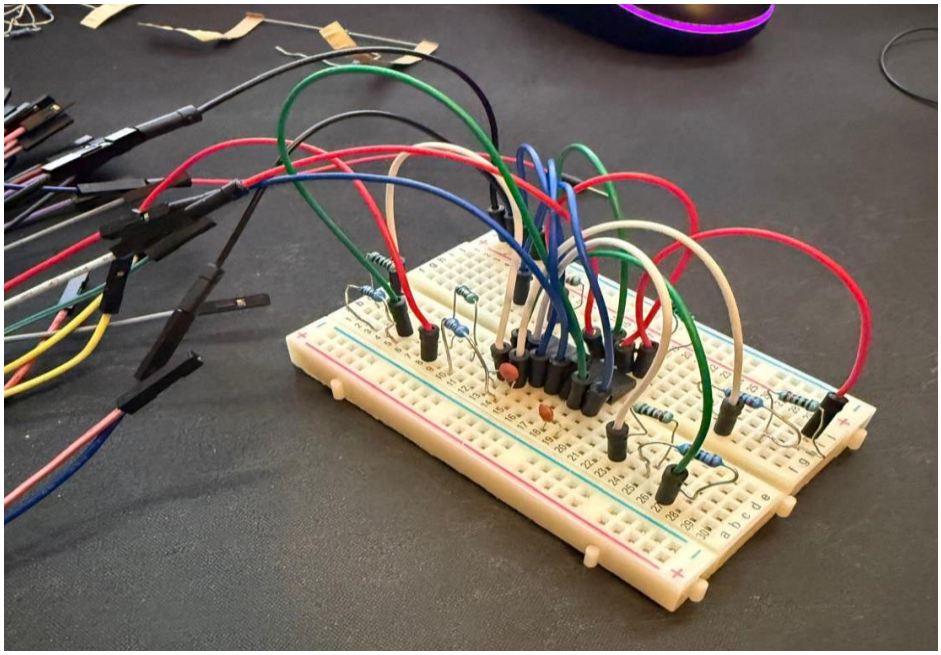

Figure 51. Stage 2 on breadboard implementation (side view)

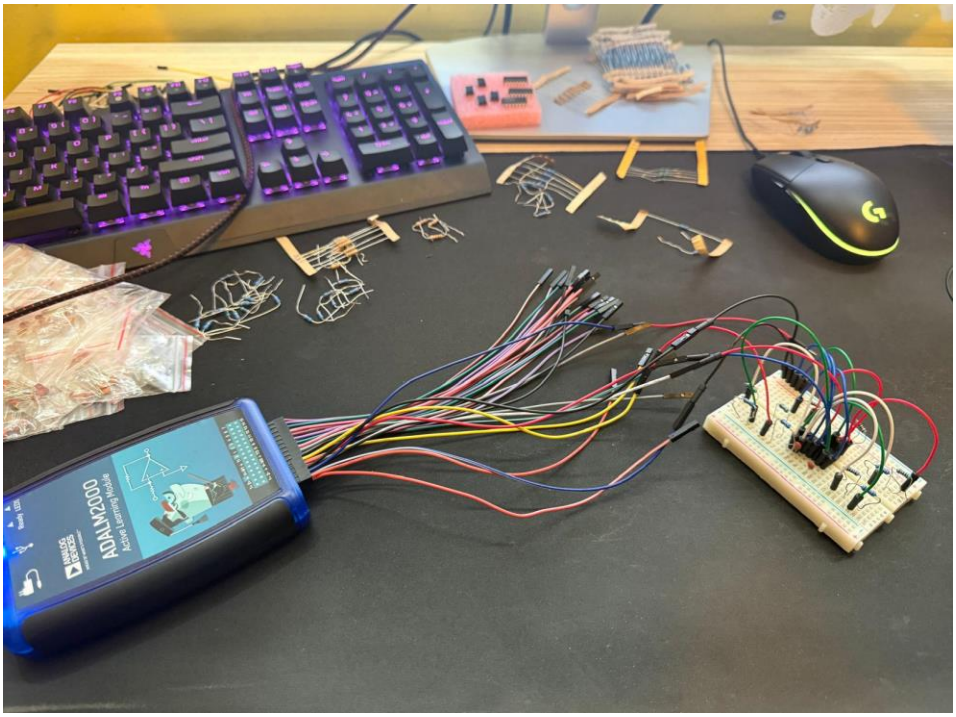

Figure 52. Stage 2 on breadboard implementation (distant view)

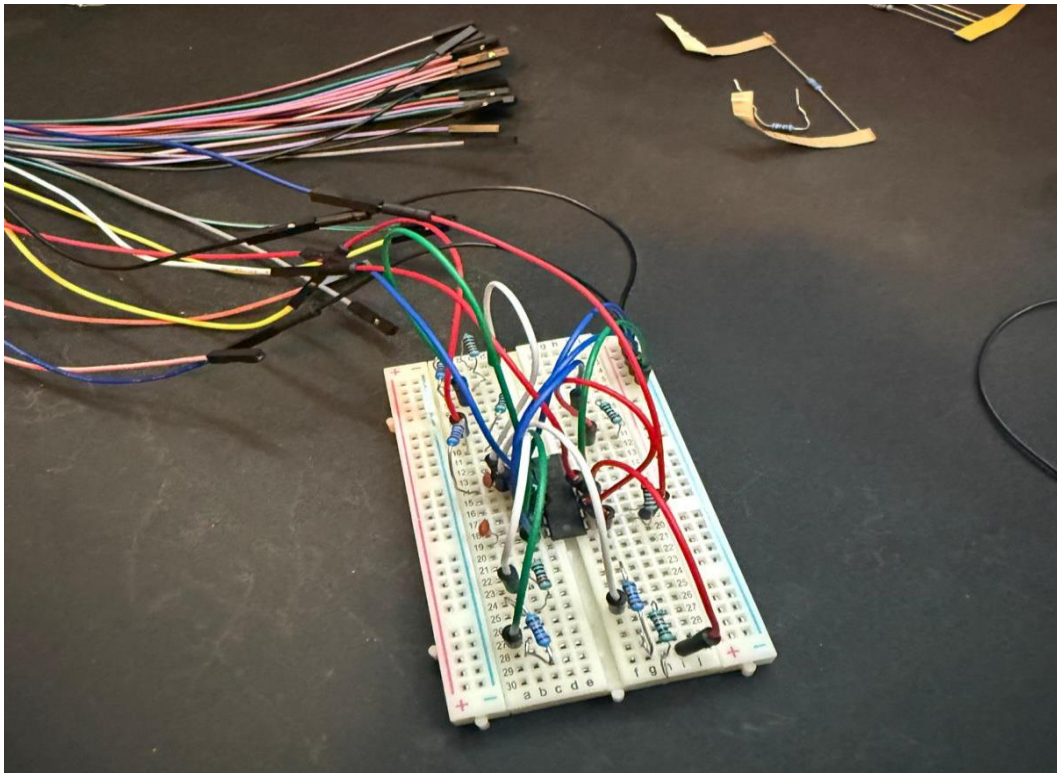

Figure 53. Stage 2 on breadboard implementation (upper view)

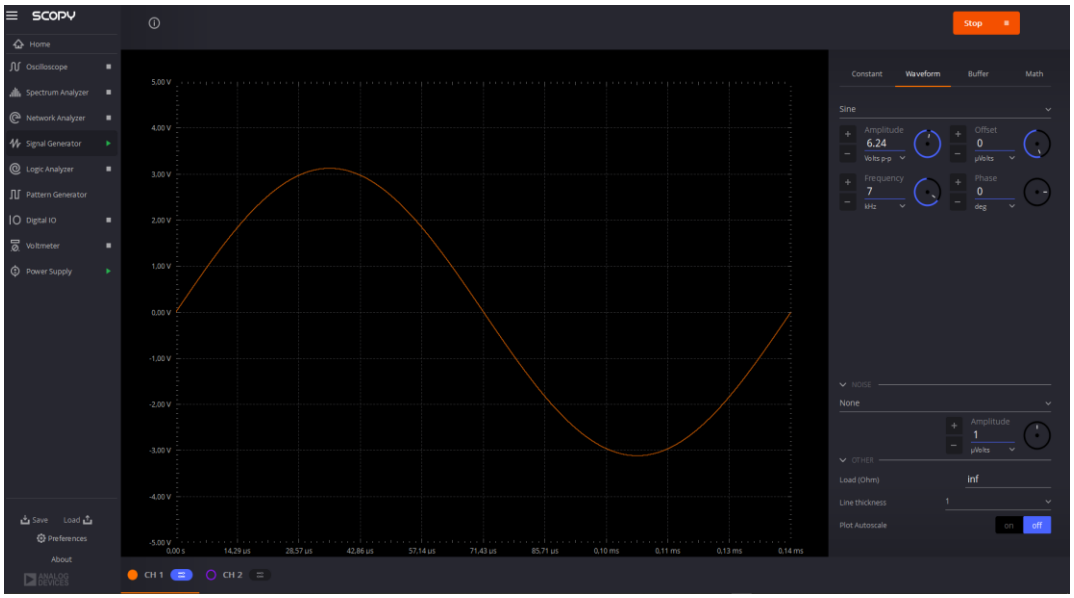

Figure 54. Software-generated input voltage signal

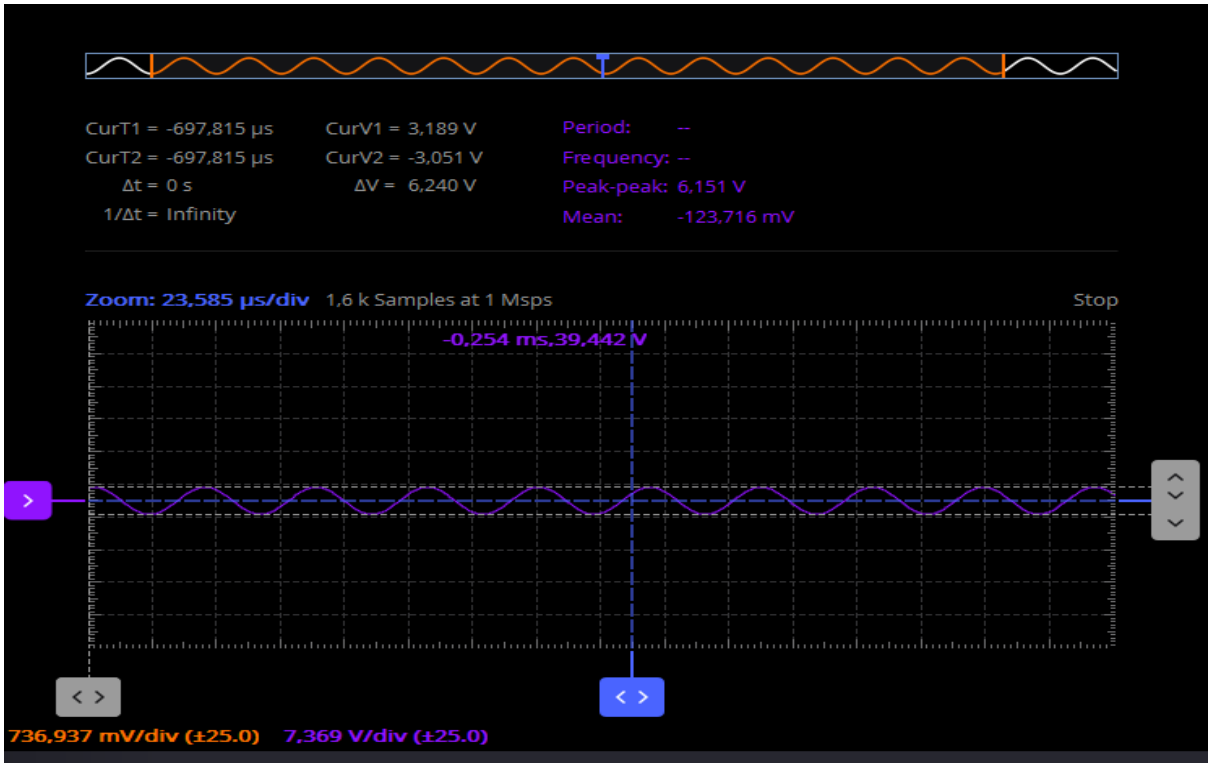

Figure 55. Output voltage signal on oscilloscope

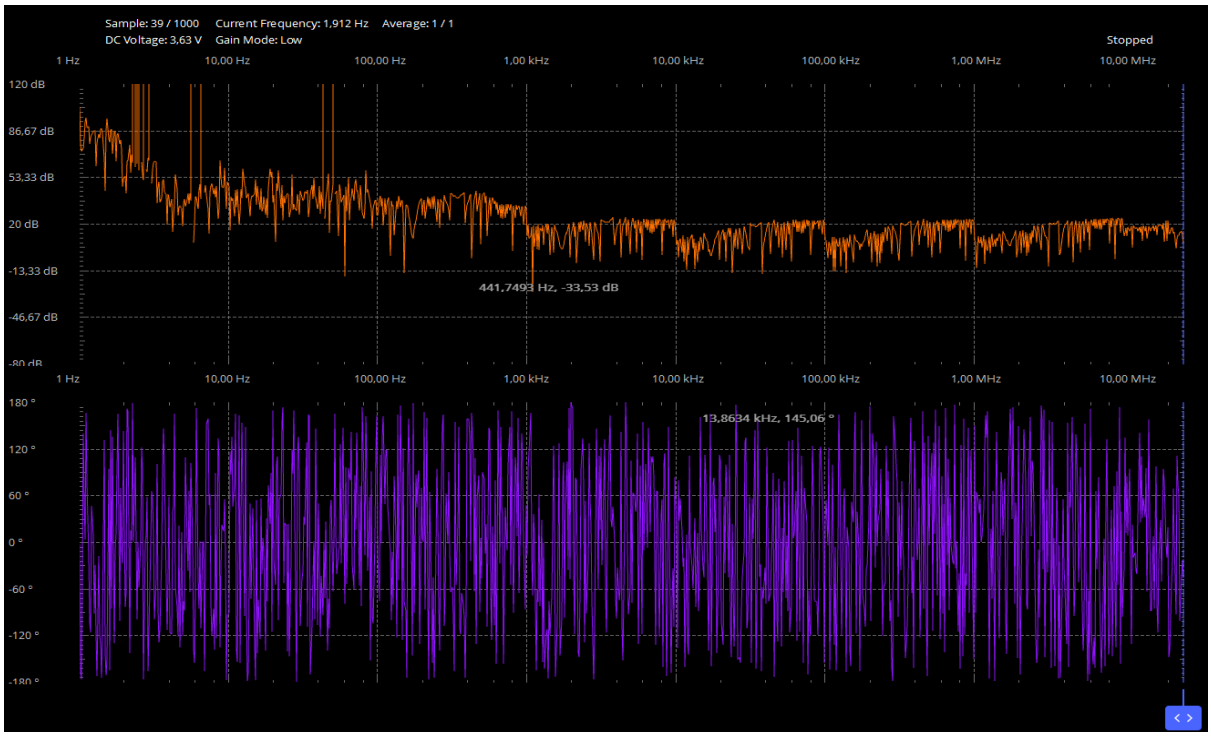

Figure 56. Bode characteristics

We cannot practically extract the parameters obtained in LTSpice because we did not obtain a good filter characteristic in Scopy. However, the output signal has approximately the same amplitude as the input signal, so we can deduce the unity gain in the passband.

4.3 Stage 3

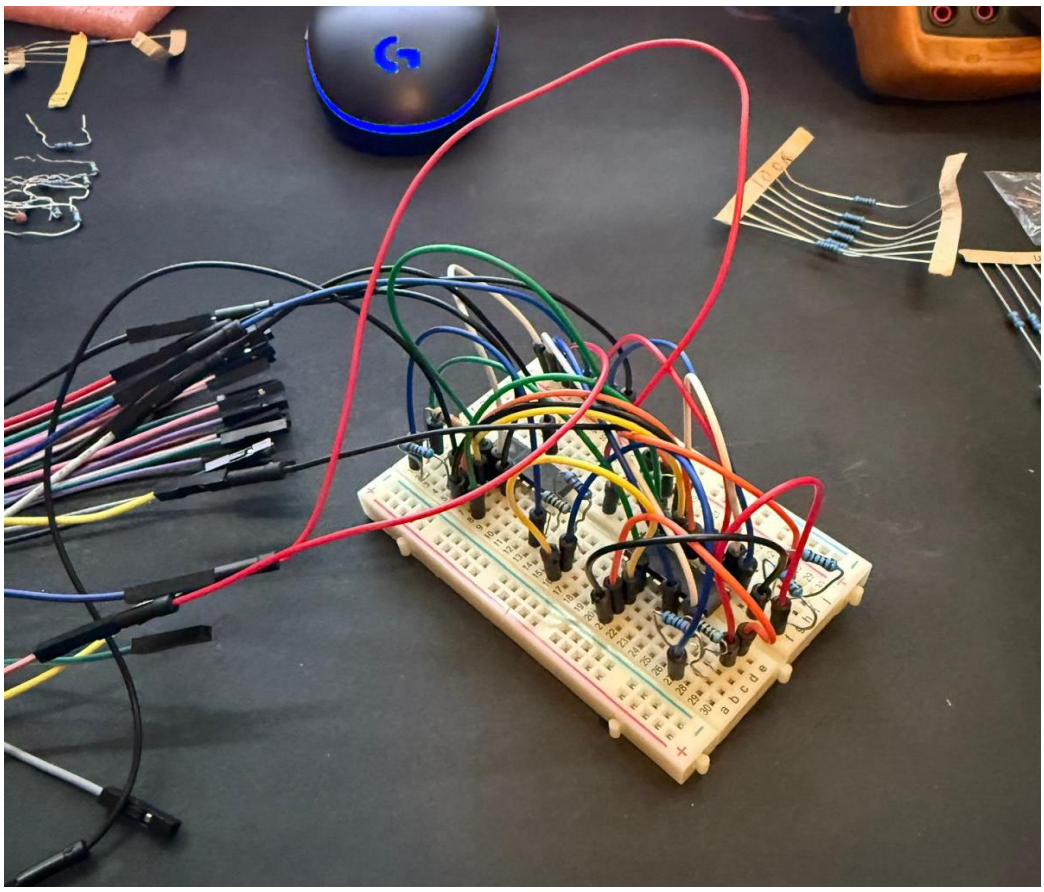

Figure 57. Stage 3 on breadboard implementation (side view)

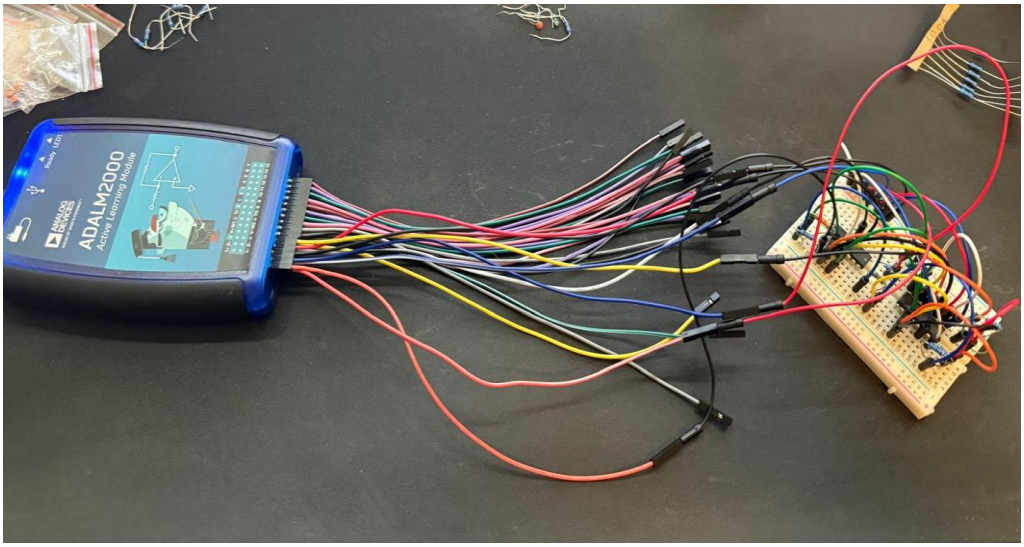

Figure 58. Stage 3 on breadboard implementation (distant view)

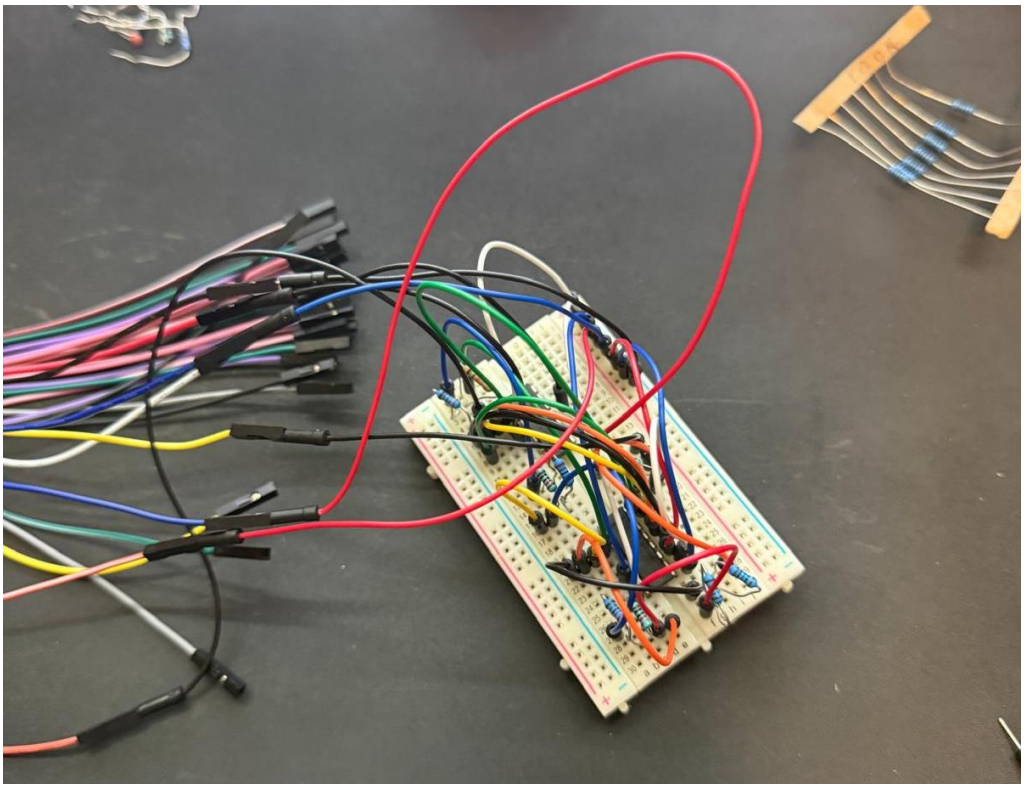

Figure 59. Stage 3 on breadboard implementation (upper view)

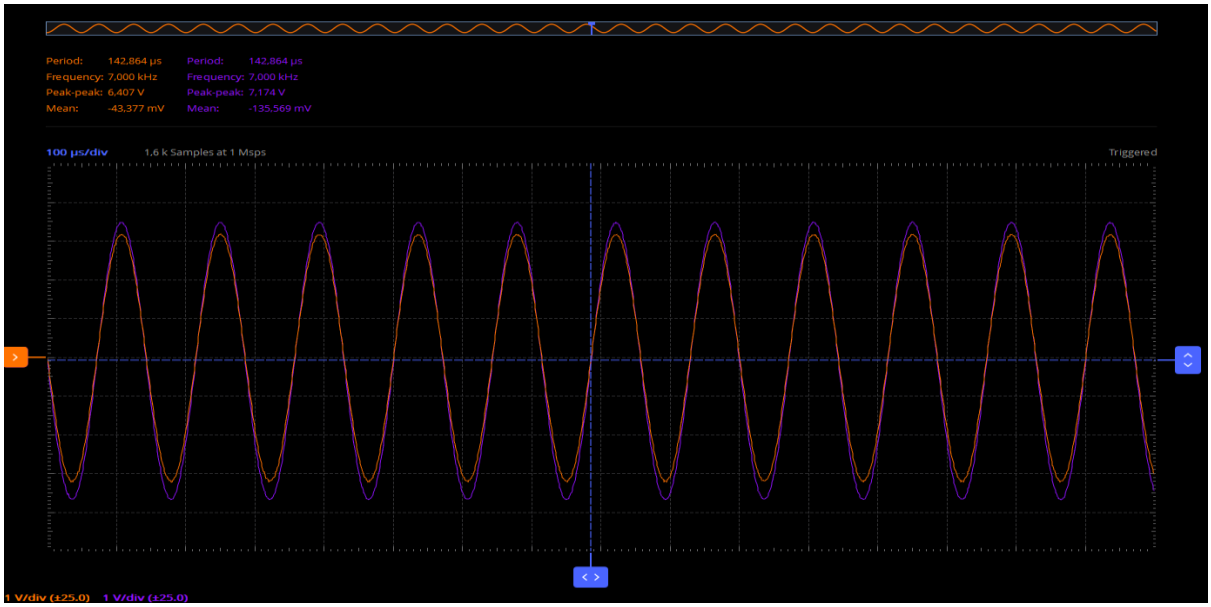

Figura 60. V_in (orange) (A_vin = 3.12V) and V_out (purple) for 1dB PGA gain

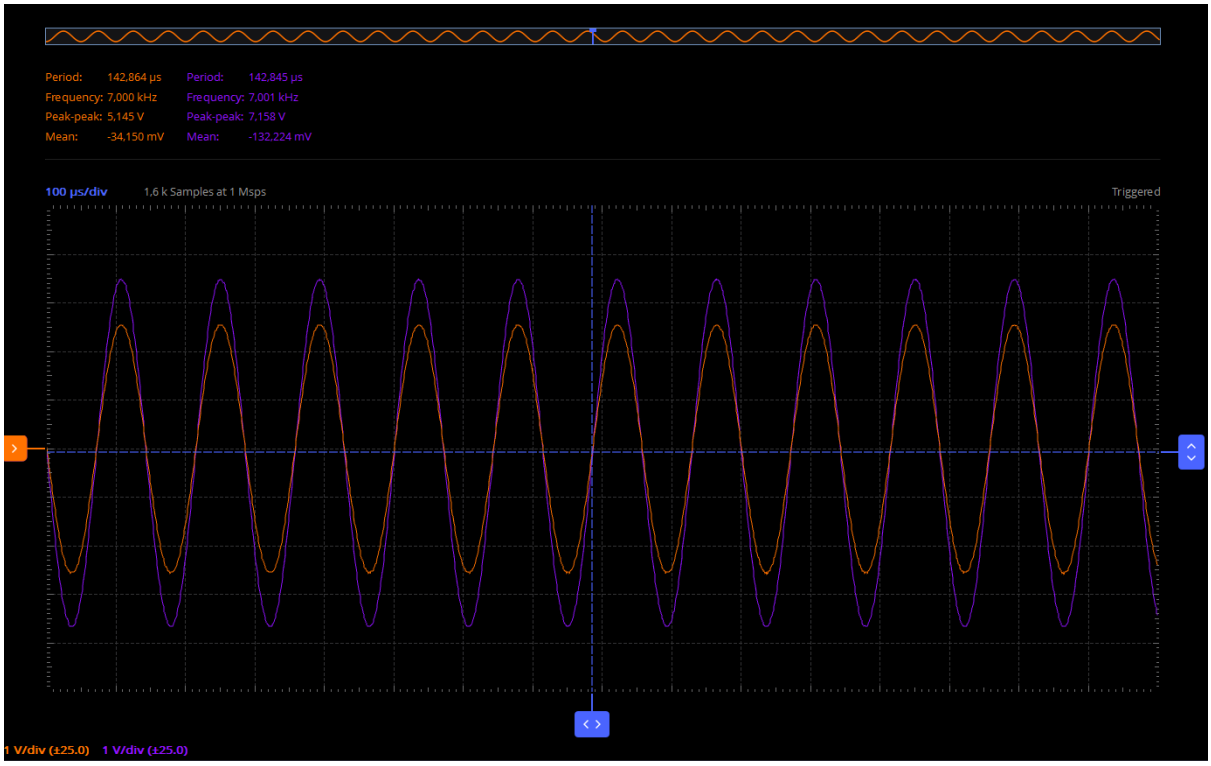

Figura 61. V_in (orange) (A_vin = 2.5V) and V_out (purple) for 3dB PGA gain

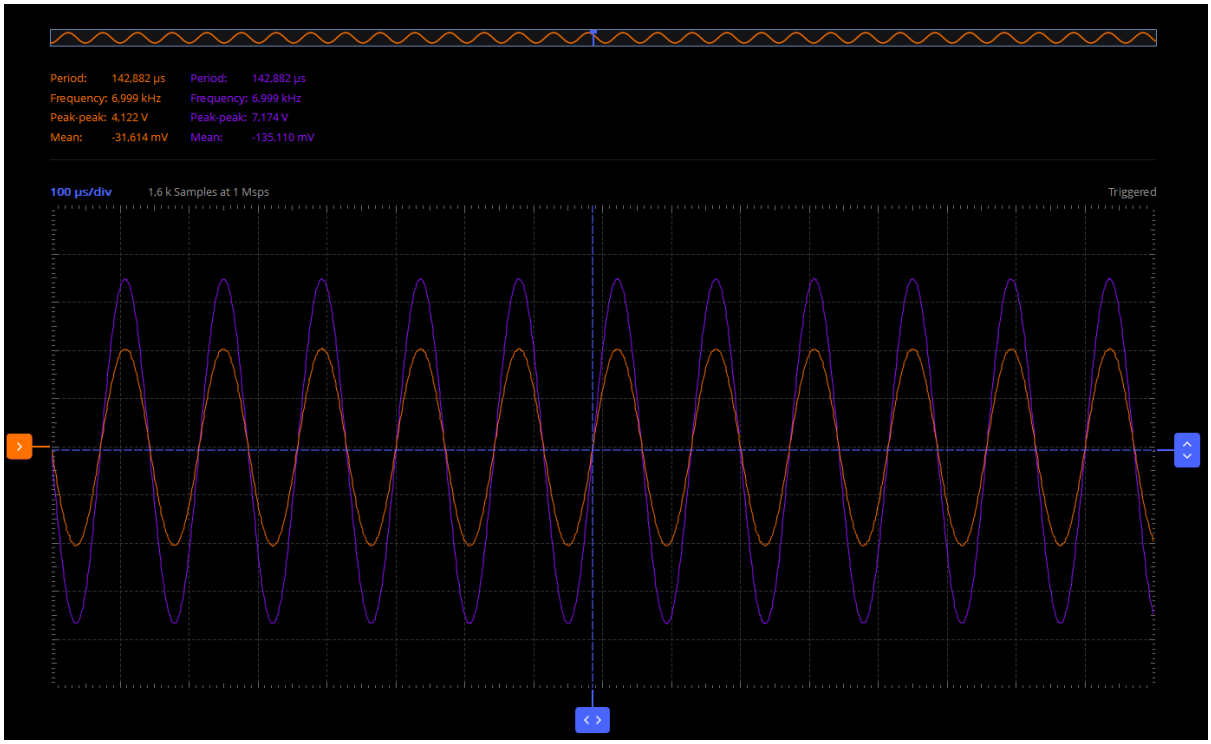

Figure 62. Figura 61. V_in (orange) (A_vin = 2V) and V_out (purple) for 5dB PGA gain

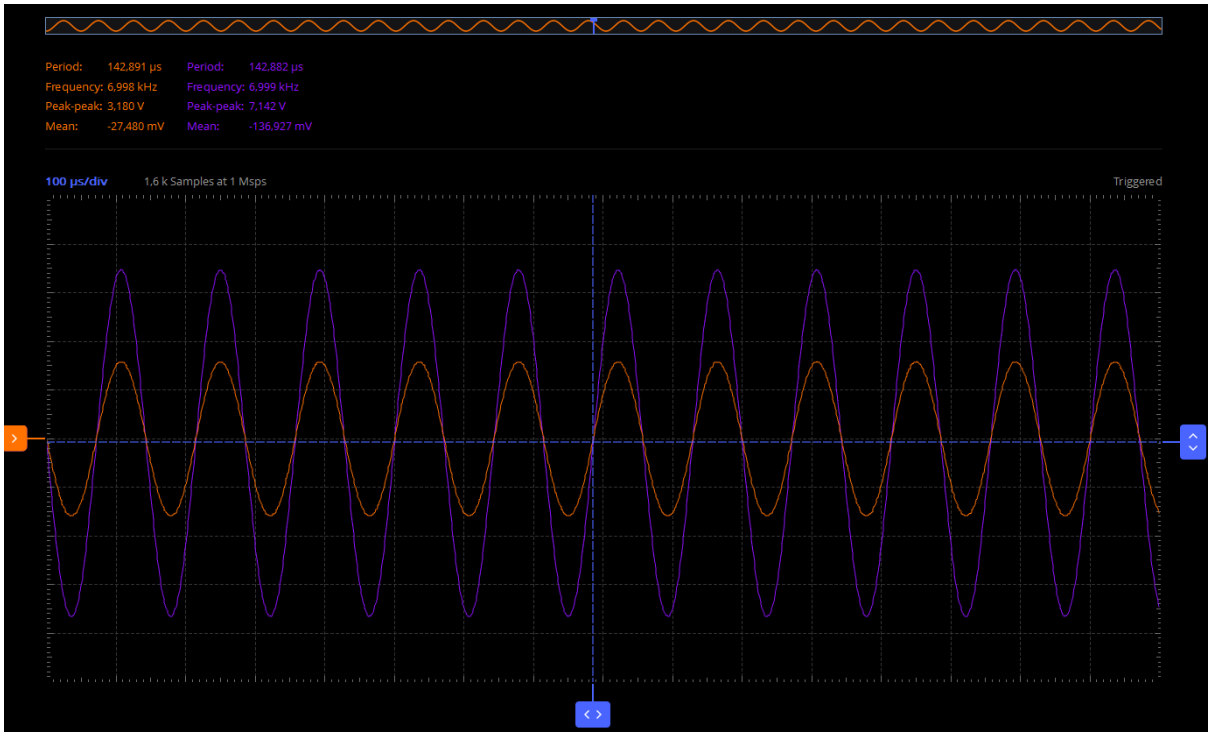

Figure 63. Figura 61. V_in (orange) (A_vin = 1.56V) and V_out (purple) for 7dB PGA gain

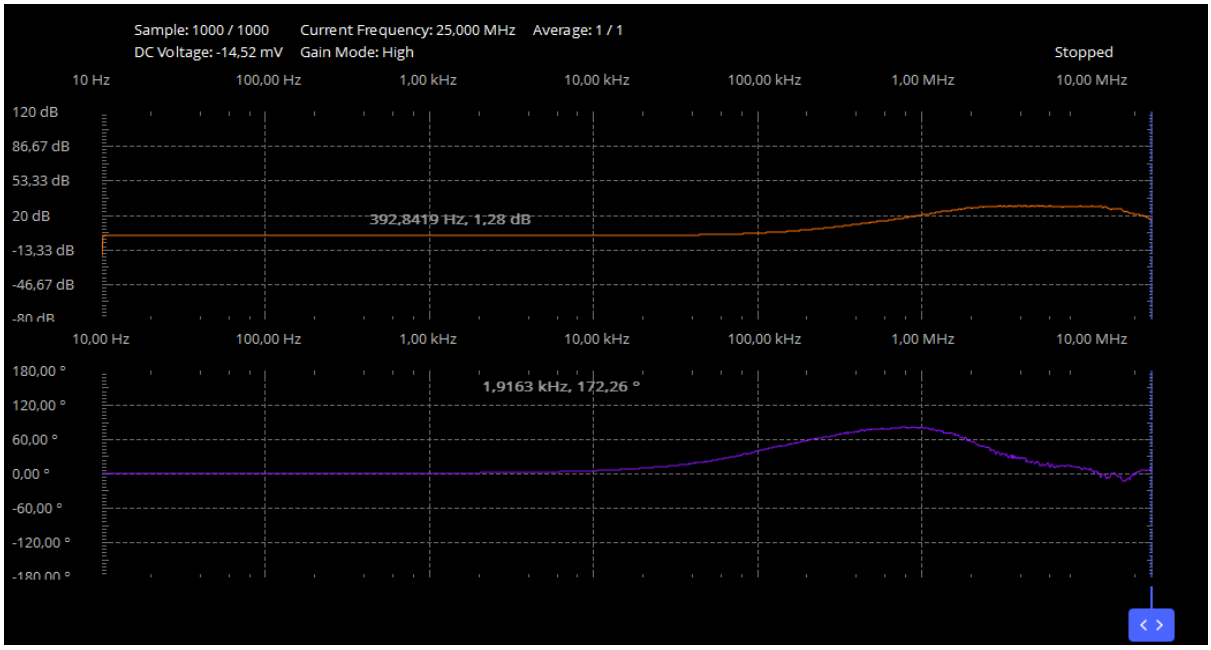

Figure 64. Bode characteristics

For all 4 gains 1dB, 3dB, 5dB and 7dB the Bode characteristics look identical only that they have the specific gain on the magnitude characteristic. Thus, practically no parameters obtained in LTSpice can be extracted because we also did not obtain a good frequency characteristic in this case.

4.4 Stage 4

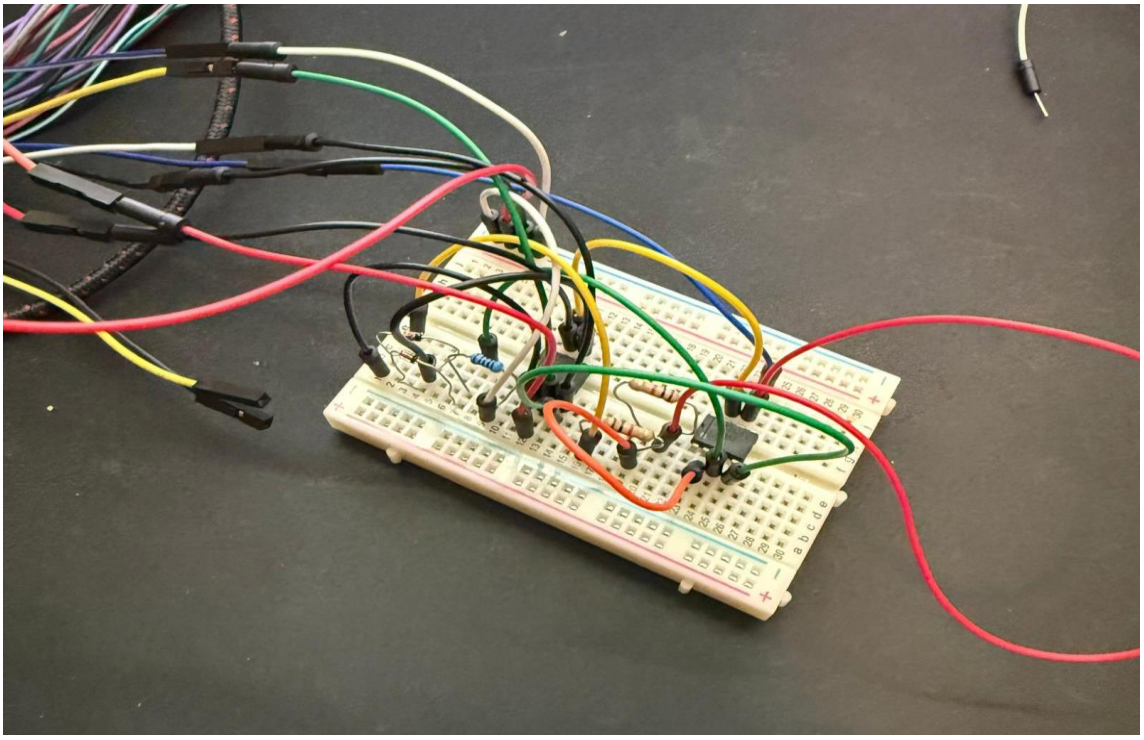

Figure 65. Stage 4 on breadboard implementation (upper view)

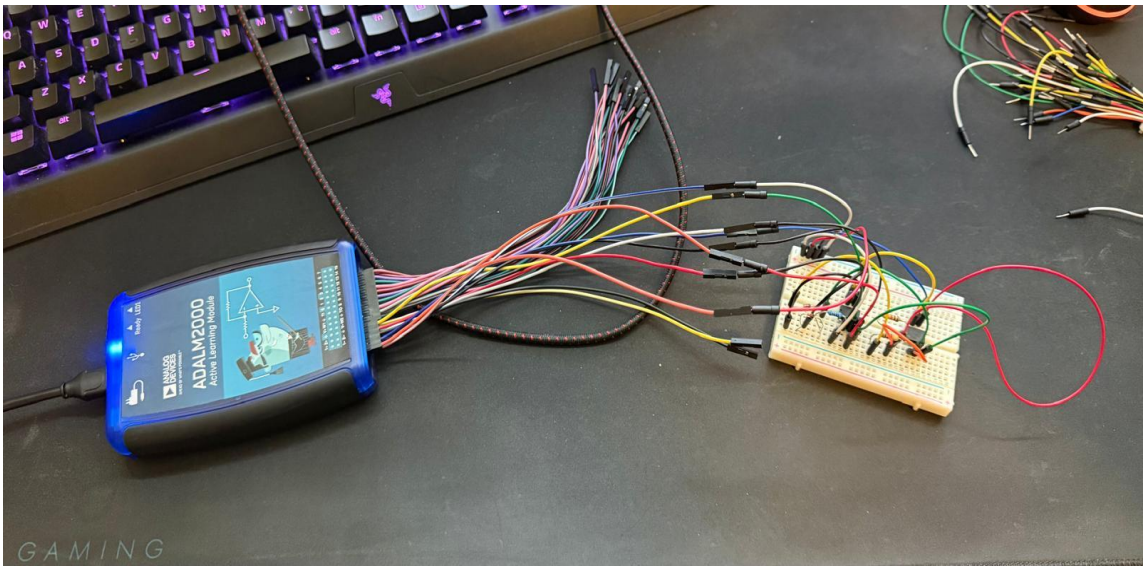

Figure 66. Stage 4 on breadboard implementation (distant view)

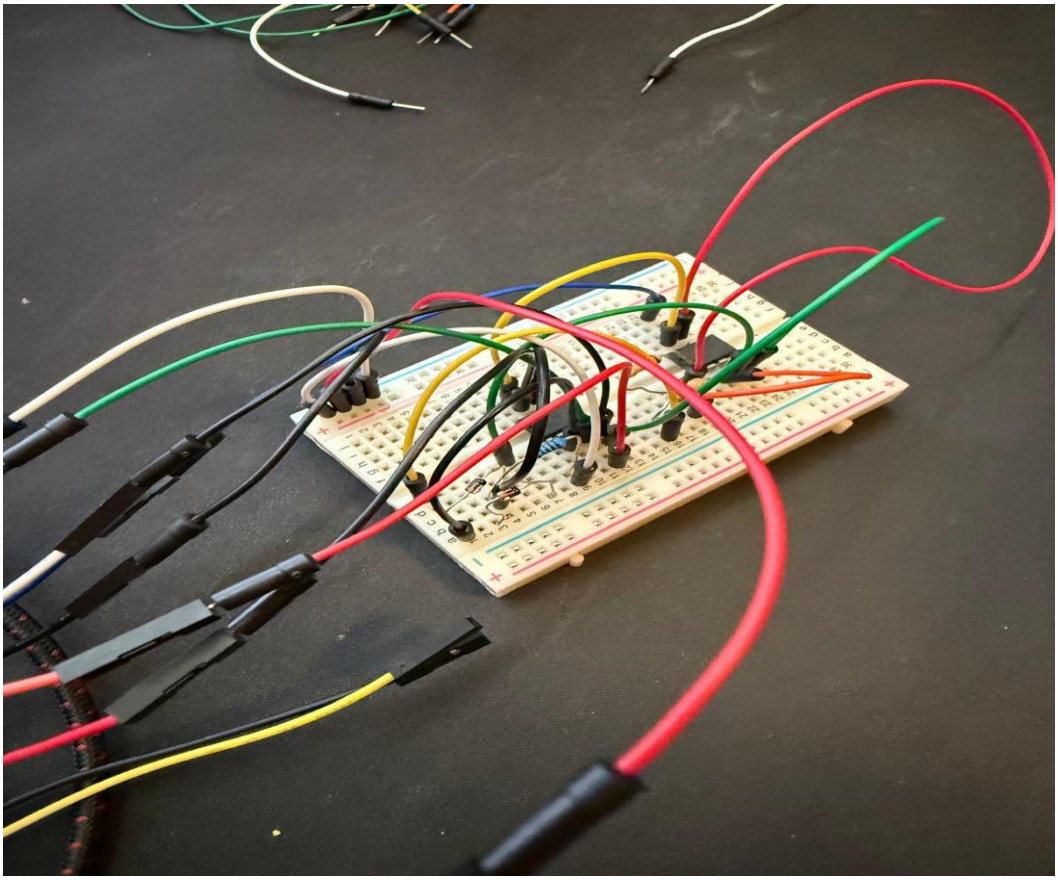

Figure 67. Stage 4 on breadboard implementation (side view)

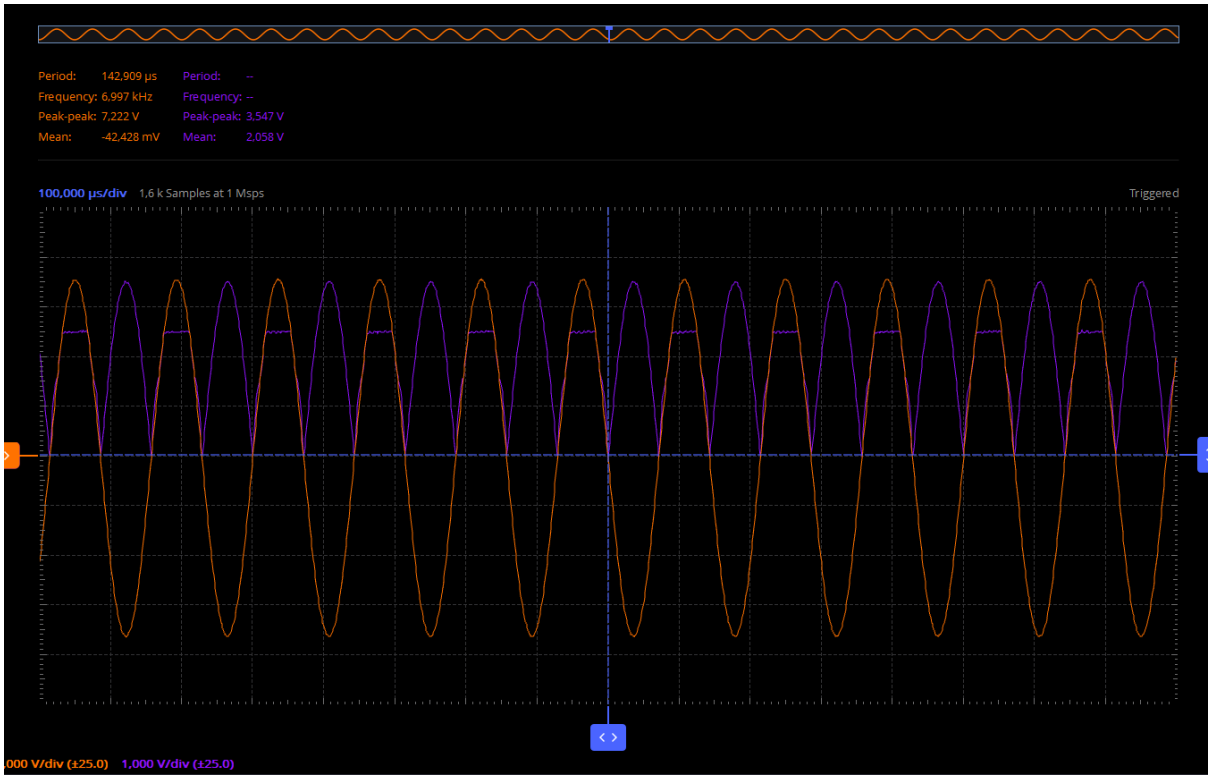

Figure 68. Full-wave rectifier (input signal – orange, output signal – purple)

According to the simulations in LTSpice, the rectification on the positive alternation is limited to 3.5V amplitude for the input signal and +/-5V supply due to the output voltage swing of OA, which also happens on the practical circuit as seen in figure 68.

BIBLIOGRAPHY

1. Systems with Analog Integrate Circuits Courses, prof. dr. ing. Marius Neag
2. Datasheet MAX4617 https://www.analog.com/media/en/technical-documentation/data-sheets/max4617-max4619.pdf
3. Datasheet OP482 https://www.analog.com/media/en/technical-documentation/data-sheets/op282_482.pdf
4. Datasheet LT1357 https://www.analog.com/media/en/technical-documentation/data-sheets/1357fa.pdf
5. Resistor finder https://mustcalculate.com/electronics/resistorfinder.php?r=1.6k&es=E6#google_vignette