LOC I-FND	APP CRS	Rwy ldg	8301
111.7	155°	TDZE	138
		Apt Elev	146

BALTIMORE/ WASHINGTON INTL THURGOOD MARSHALL (BWI) ILS or LOC RWY 15R

Simultaneous approach authorized with Rwy 15L. DME or Radar required. DME from BAL VORTAC.
RVR 1800 authorized with use of FD or AP or HUD to DA.

MALSR

MISSED APPROACH: Climb to 900 then climbing right turn to 2600 on BAL VORTAC R-294 to DATED INT/BAL 14.9 DME and hold.

D-ATIS	POTOMAC APP CON		BALTIMORE TOWER	GND CON	CLNC DEL
115.1 127.8	119.0 282.275 (020°-100°) 124.55 317.425 (101°-130°)	119.7 290.475 (131°-180°) 128.7 307.9 (181°-019°)	119.4 257.8	121.9	118.05

CPDLC

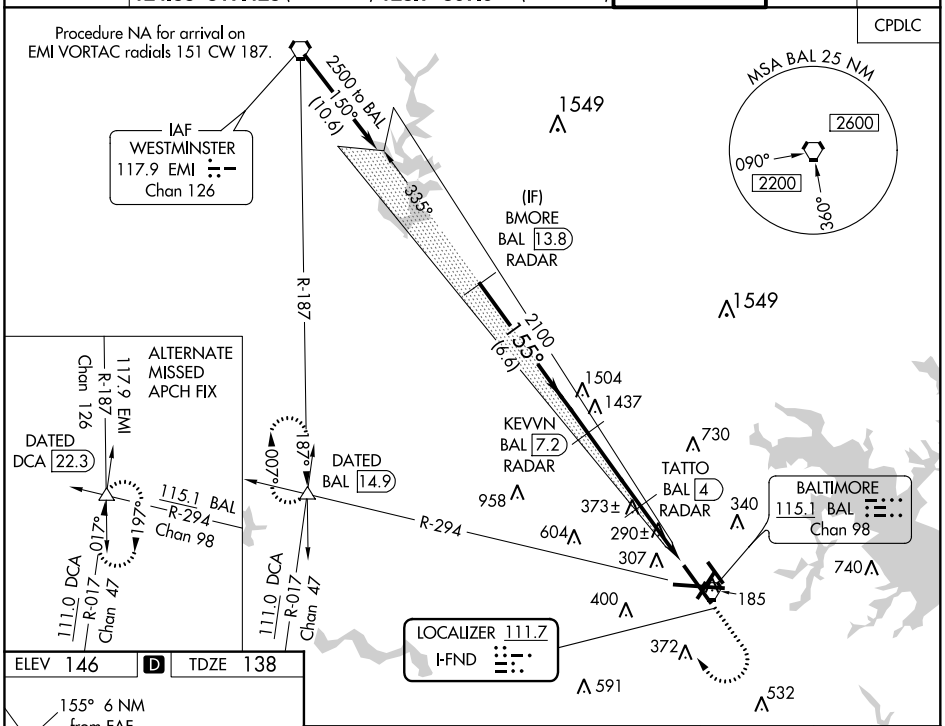

NE-3, 27 JAN 2022 to 24 FEB 2022

ELEV 146 D TDZE 138

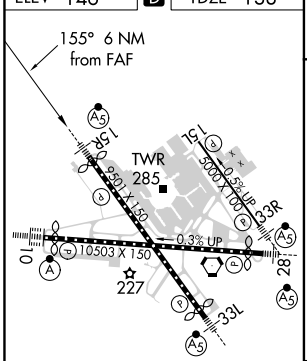

TDZ/CL Rwys 10 and 33L
REIL Rwys 15L and 33R
HIRL all rwys

FAF to MAP 6 NM					
Knots	60	90	120	150	180
Min:Sec	6:00	4:00	3:00	2:24	2:00

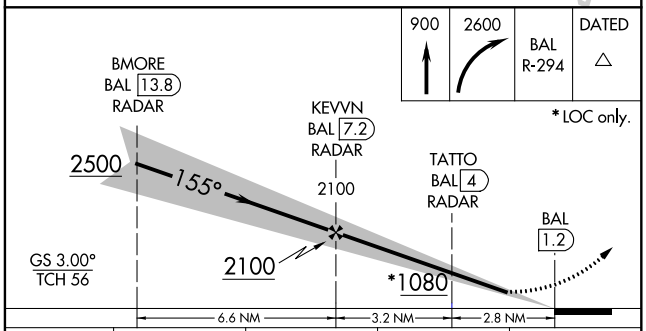

* LOC only.

CATEGORY	A	B	C	D
S-ILS 15R	#338/24		200 (200-½)	
S-LOC 15R	540/24	402 (400-½)	540/40	402 (400-¾)
C CIRCLING	640-1 494 (500-1)	660-1 514 (600-1)	700-1½ 554 (600-1½)	880-2¼ 734 (800-2¼)

NE-3, 27 JAN 2022 to 24 FEB 2022