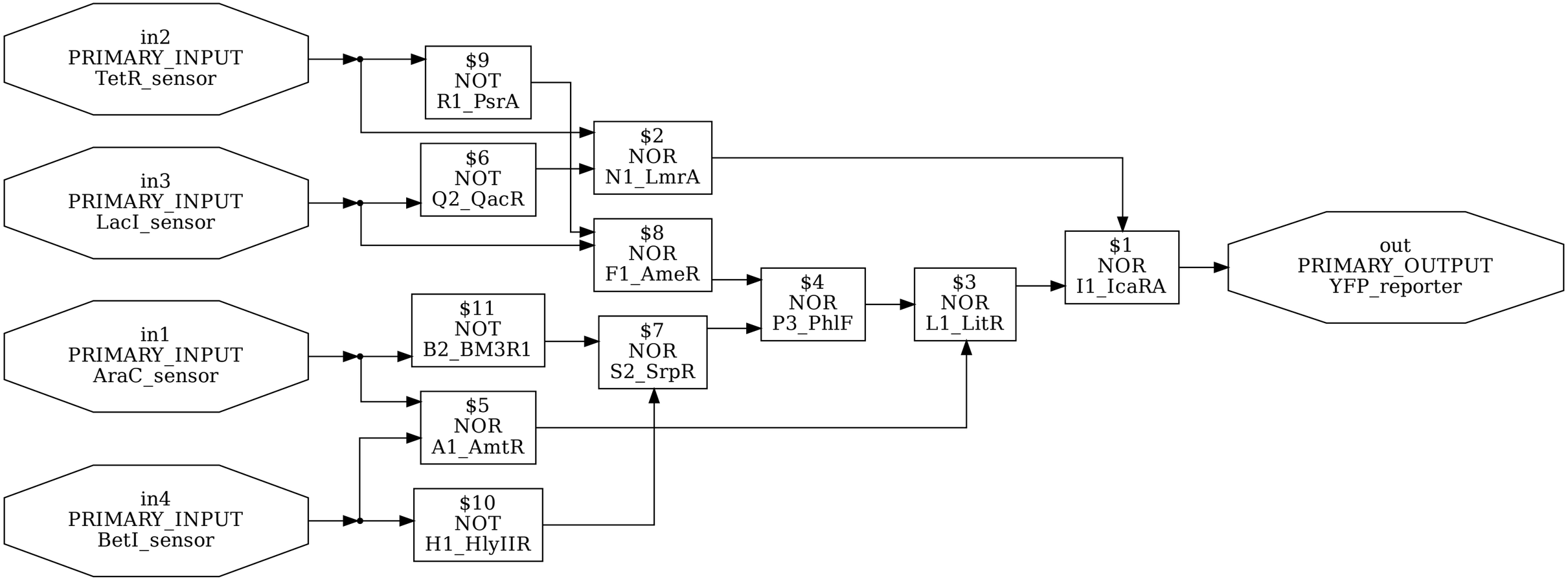
in2
PRIMARY_INPUT
TetR_sensor
in3
PRIMARY_INPUT
LacI_sensor
in1
PRIMARY_INPUT
AraC_sensor
in4
PRIMARY_INPUT
BetI_sensor
$9
NOT
R1_PsrA
$6
NOT
Q2_QacR
$11
NOT
B2_BM3R1
$5
NOR
A1_AmtR
$10
NOT
H1_HlyIIR
$2
NOR
N1_LmrA
$8
NOR
F1_AmeR
$7
NOR
S2_SrpR
$4
NOR
P3_PhlF
$3
NOR
L1_LitR
$1
NOR
I1_IcaRA
out
PRIMARY_OUTPUT
YFP_reporter

m0xCB82