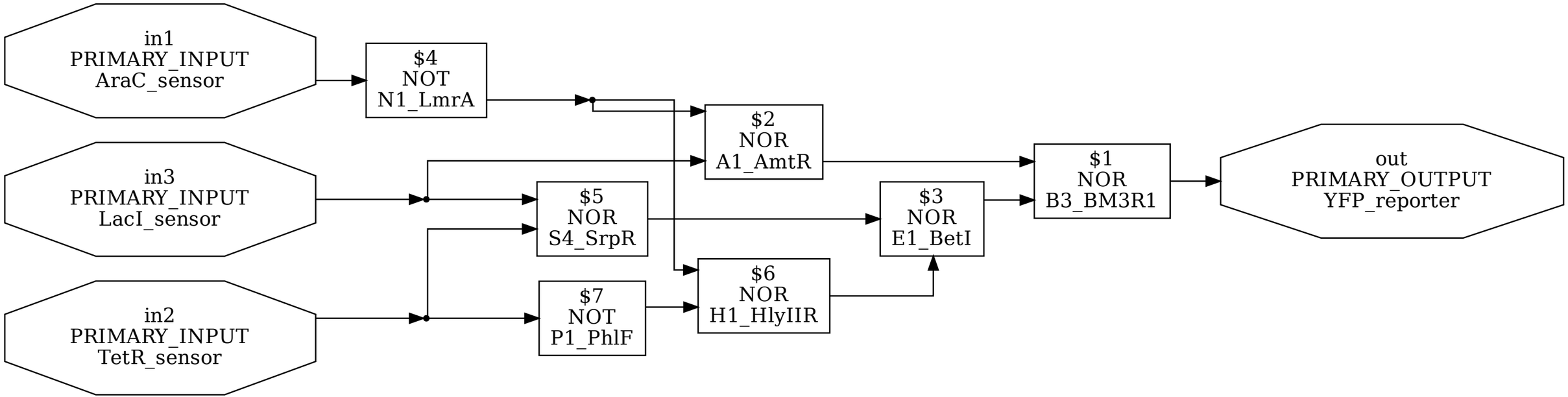
in1
PRIMARY_INPUT
AraC_sensor
in3
PRIMARY_INPUT
LacI_sensor
in2
PRIMARY_INPUT
TetR_sensor
$4
NOT
N1_LmrA
$2
NOR
A1_AmtR
$5
NOR
S4_SrpR
$7
NOT
P1_PhlF
$6
NOR
H1_HlyIIR
$3
NOR
E1_BetI
$1
NOR
B3_BM3R1
out
PRIMARY_OUTPUT
YFP_reporter

m0x81