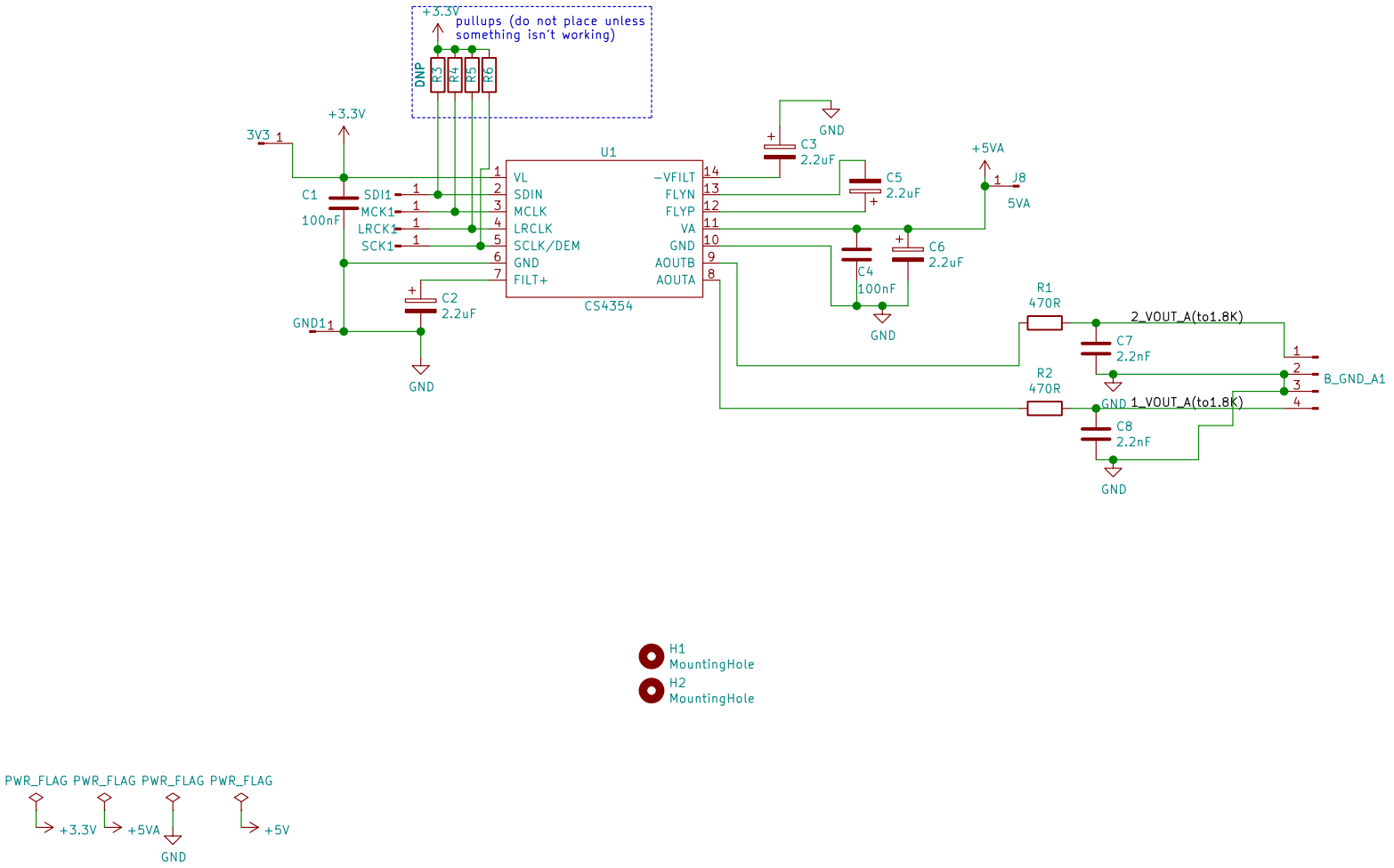

Sheet: /
File: cs4354-daughterboard.sch

Title:

Size: A4	Date:	Rev:
KiCad E.D.A. kicad 5.1.2-f72e74a84ubuntu18.04.1		Id: 1/1