Telink

Telink Semiconductor

TLSR825X Hardware Design Guideline

2025-06

Telink Confidential

Scope

- Chip`s datasheet is the basic reference file of hardware design. This document will go through datasheet with hardware engineer and supplement some details. It will speed up projects after reading the document.
- Considering that the chip`s datasheet will be continuously updated, if there is any difference between this document and the chip`s datasheet, please refer to the latest version of the chip specifications.
- The version and link of the chip`s datasheet mentioned in this document are as follows:
  - DS_TLSR8258-E_Datasheet for Telink BLE+IEEE802.15.4 Multi-Standard Wireless SoC TLSR8258 (V0.8.9)
  - https://www.telink-semi.com/products/bluetooth-le/tlsr825x
- TLSR8258F512ET48 is taken as an example to describe. And the content mentioned in the file applies to the chipset as below:
  - TLSR8258
  - TLSR8253
  - TLSR8251
  - TLSR8359
  - TLSR8656

Schematic Design Guideline

Reference Schematic

- Reference Schematic:
  - Refer to chapter 17.
  - Two reference design are listed here.
    - One is the reference schematic of TLSR8258F512ET48.The other is the reference schematic of TLSR8258F512ET32.
    - Schematic and BOM are listed together.
  - The schematic is the design of minimum core system
    - Easy to copy into other designs.
    - Easy to count the cost at the stage of design-in.

Pin layout

- Pin layout:
  - Refer to chapter 1.6, then schematic and pcb footprint can be set up.
  - Power pins:
    - PIN13(VDD1V), internal digital core power supply. A decoupling capacitor, 1uF, is needed.
    - A serial 47uH inductor should be connected between the PIN16(VDCDC_SW) and PIN17(VDCDC).
    - PIN18(VDD1V2), internal DCDC power supply, route to PIN39(AVDD1V2), internal rf power supply.
    - PIN19(VDD_F), internal flash power supply. A decoupling capacitor, 1uF, is needed.
    - PIN15(VDD_IO), PIN26(VDD3), PIN27(VDDIO_AMS), external power source, 1.8V~3.6V.
  - RF pins:
    - PIN38(ANT) is RF port.
    - PIN37(VANT) will generate voltage to bias internal PA.
  - Crystal pins:
    - PIN40(XC1), PIN41(XC2) connect 24Mhz crystal.
  - Debug pin:
    - PIN9(SWS) should be connected to a test point which is used to download firmware.
    - A group UART pin should be connected to test points which is used to do BQB test.
      - Some BQB binary files have been prepared on WIKI.
        - http://wiki.telink-semi.cn/dokuwiki/doku.php?id=menu:tools:bqb

Power Supply

- Power Supply:
  - Refer to chapter 16.2.
  - Power-supply voltage: 1.8V~3.6V
    - When power supply voltage is 1.8V~3.6V (e.g. dual dray batteries are used to supply power), the power supply is directly connected to the chip.
    - When power supply voltage is lower than 1.8V (e.g. single dry battery is used to supply power), external boost DCDC is needed.
    - When power supply voltage exceeds 3.6V (e.g. lithium battery is used to supply power), external buck DCDC or LDO is needed.
- Decoupling capacitors:
  - Refer to chapter 17.
- DC-DC inductor:
  - Refer to chapter 17.
  - The recommended inductance for DCDC is 47uH. Please refer to the parameters of the LB2012T470M to select inductor model.
  - Decreasing inductor value from 47uH to 10uH or 6.8uH, sensitivity will degenerate 1~2dB.

RF front-end

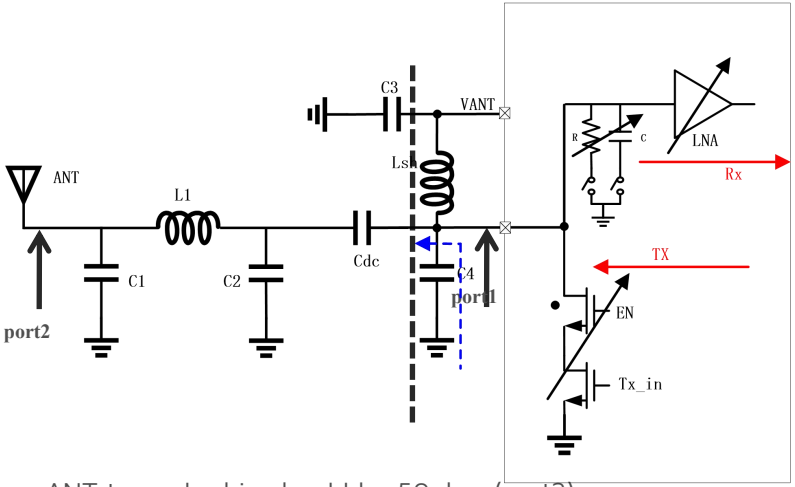

- Impedance seen from ANT towards chip should be 50ohm.(port2)
- Rx is disable when TX mode(port1 to LNA is high Z), also TX is disable when Rx mode.
- TX Load inductor(Lsh) is on the PCB (out-of chip), and telink transceiver consists of Lsh/C3/C4 and on-chip Rx and TX.
- The impedance of TX from port1 to ANT is about 300ohm(Blue line, that makes the TX optimal design, also can get the voltage gain from port2 to port1 when Rx mode).
- When the impedance from ANT towards the chip is 50ohm, thus every point on the matching network will be a conjugate match, so he left and right sides of the dotted line will be conjugated impedance,. We get PA output impedance (on the right side of the dotted line) is 300+jX, so on the left side of the dotted line will be 300-jX.

Certification

- Hardware tuning part
  - Cdc (default value: 220pF) is connected to the ANT pin. If the capacitor is not connected, and test instrument can not block DC signal, test may be abnormal.
  - C1, L1, C2 and C4 are used for circuit matching during certification, the values of which are flexibly adjustable corresponding to layout.
  - Firstly, use VNA (Vector Network Analyzer) to do RX matching.
    - Customers must power on DUT, and use EMI tool to configure 8258 into RX mode, then tune RX matching.
  - After RX test is finished, SA (Spectrum Analyzer) should be used to check TX harmonic.
    - If harmonics do not meet the requirements, re-do RX matching.
      - Use the VNA to adjust component value to meet the impedance matching requirements, and then check TX harmonic again.
- ATTENTION:
  - It is recommend to mount a shielding box on PCBA for certification if customer can afford the cost. It is easy to pass certification and save time.

Certification(Cont.1)

- Software tuning part
  - According to the client test data feedback, under the same tx power, using the vbat mode test will have much lower harmonics than using the vant test.If the certified power is lower than 3dbm, we suggest changing from the default vant mode to vbat mode for testing.
  - When using emi tool, please pay attention to vant mode when the power gear is below 3dbm.
  - Users can compile the tested bin by themselves or use the emi tool to test.But you need to pay attention to achieve a greater harmonic margin, you need to actually test the transmission power before testing, and confirm it is the vbat mode.
- ATTENTION:
  - For RSE testing(harmonic testing), prbs9, burst mode is generally used.

Crystal

- Crystal:
  - Refer to chapter 1.6.3.
  - The recommended specifications are as follows:
    - 24Mhz – 12pF - +/-20ppm
  - The range of internal load capacitor is among 7.33pF~12.66pF.
  - Internal load capacitor is suggested in application.
- RTC crystal:
  - Refer to chapter 1.6.2.
  - PC2 and PC3 can be used to connect external 32.768Khz crystal.
  - The recommended specifications are as follows:
    - 32Khz – 9pF - +/-20ppm

Interface

- GPIO:
  - Refer to chapter 7.1 and chapter 2.7.4.
  - All GPIO pins have configurable pull-up resistor and pull-down resistor.
  - All GPIO pins can be independently configured as high-level/low-level wakeup source.
  - Actual test shows that after wakeup from deep sleep, PortC (PC0~PC7) may have about -1.4V noise for several hundred nanoseconds. Therefore, in actual applications, generally it's recommended not to use PortC (PC0~PC7) as output or control function, unless using external filtering capacitor (e.g. 1uF).
  - When PA5(DM) is at high level and PA6(DP) is in floating state and using burning EVK tool to burn/debug the blank chip through SWS, it will randomly fail to communicate
    - It is recommended not to pull PA5 (DM) high in hardware design as default, such as connecting this pin to VCC through LED.

- PWM:
  - Refer to chapter 8.
  - Up to 6 PWM output channels. Each PWMx(x=0~5) has its corresponding inverted output pins, PWMxN.
  - PWM0 pins, including PWM0 and PWM0N, can be used as IR driver pin.

Interface(Cont.1)

- AMIC:
  - Refer to chapter 1.6.3 and 9.1.1.
  - Differential input is suggested when using mic function.
  - PC0~PC3 can be configured as SN/SP. In official SDK and reference design, PC0 and PC1 are fixed as SN and SP, and PC4 is fixed as AmicBias. PC2 and PC3 are reserved for external 32K crystal.
- DMIC:
  - Refer to chapter 1.6.3 and 9.1.2.
  - One group DMIC pins, PA1 and PA0.
- I2S:
  - Refer to chapter 1.6.3 and 9.1.3.
  - Supports one group I2S pins, PD7, PD2,PD3 and PD4.
- SDM:
  - Refer to chapter 1.6.3.
  - Two groups of SDMP/SDMN output pins.

Interface(Cont.2)

- UART:
  - Refer to chapter 1.6.3 and 7.5.
  - Supports general UART interface and 7816 UART interface. General UART and 7816 UART share the same hardware circuit. General UART supports full-duplex transmission and reception, but 7816 UART only supports half-duplex as per 7816 spec.
  - Only Baseband, AES, UART/IR support DMA. UART and IR share the same DMA channel.
  - Any TX and RX can be configured into a group to use.
  - 7816 UART pins, including PD7, PC2, PD0 and PD3, can be configured as 7816 UART function or general UART UTX function, but DO NOT support UART URX function.
  - 8258 only has one set of UART hardware circuit.
  - Detail info:
    - TX pins: PA2, PB1
    - RX pins: PA0, PB0, PB7, PC3, PC5, PD6
    - Baud rate: 300/600/1200/2400/4800/19600/14400/38400/56000/57600/115200

Interface(Cont.3)

- I2C:
  - Refer to chapter 1.6.3 and 7.3.
  - PC0/PC1, PC2/PC3, PA3/PA4 and PB6/PD7 can be configured as I2C master/slave mode.
  - For supporting up to 400K bit/s, external pull-up resistors must be added.
  - 8258 only has one set of I2C hardware circuit.
- SPI:
  - Refer to chapter 1.6.3 and 7.4.
  - PA2/PA3/PA4/PD6 and PB7/PB6/PD7/PD2 can be configured as SPI function and support both maser and slave mode.
  - 8258 only has one set of SPI hardware circuit.
  - 8258 supports 500Kbps, 1Mbps, 2Mbps, 4Mbps.
- SPI and I2C can be multi-used as below.
    - I2C and SPI cannot be used as Slave mode at the same time.
    - I2C Slave and SPI Master mode can be used at the same time.
    - I2C Master and SPI Slave mode can be used at the same time.
    - I2C and SPI can be used as Master mode at the same time.

Interface(Cont.4)

- ADC:
  - Refer to chapter 1.6.3 and 11.
  - Supports up to 10 detect pins, including PB0~PB7, PC4~PC5.
- Battery voltage detect:
  - When power supply voltage is lower than 1.8V (e.g. single dry battery is used to supply power), external boost DCDC is needed. Supply voltage should be sent to any ADC input channel for voltage detection.
  - When power supply voltage exceeds 3.6V (e.g. lithium battery is used to supply power), external buck DCDC or LDO is needed. User should implement voltage division to the supply voltage, so that it's decreased below 3.6V. Then this voltage lower than 3.6V should be sent to any ADC input channel for voltage detection. Each ADC input pin has embedded voltage divider circuit.
  - When power supply voltage is 1.8V~3.6V (e.g. dual dray batteries are used to supply power), user does not need to directly connect the power supply to ADC input channel, but should ensure there's one ADC detect pin floating and not connected to any external signal.

Interface(Cont.5)

- External RF front-end pins:
  - Refer to chapter 1.6.3.
  - TXCYC is used to control the PA (Power Amplifier) of external RF Front-end: PB3, PC7, PD1.
  - RXCYC is used to control the LNA of external RF Front-end: PB2, PC6, PD0.
- Antenna Select pins:
  - Refer to chapter 1.6.3.
  - Two groups of SEL<0:2>: PD6/PB0/PB1, PC5/PC6/PC7. SEL<0:2> are used to select one of up to eight external antennas. The selected antenna channel is connected to the RF_IO pin.

PCB Design Guideline

RF layout

- The components on the RF path MUST be placed one by one. and they MUST be placed close to each other, no stub.
- It the area is not enough, can fold it, but MUST use ground and via to shield RF trace.

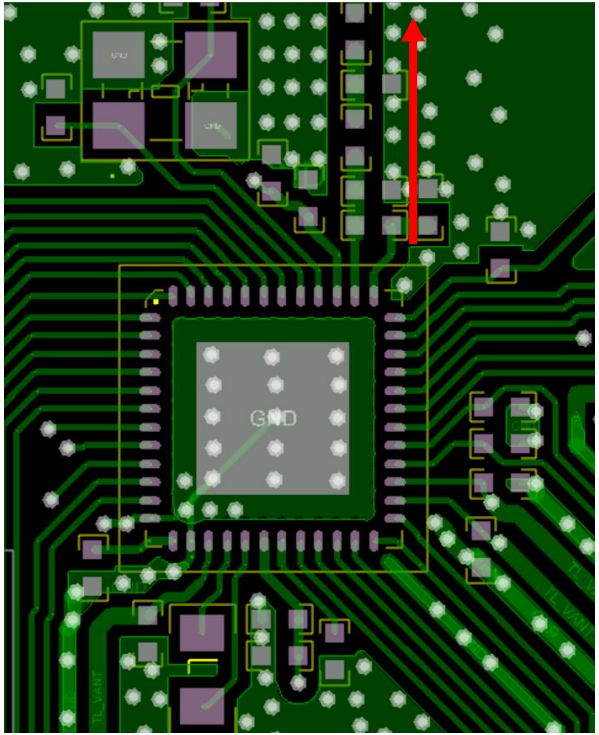

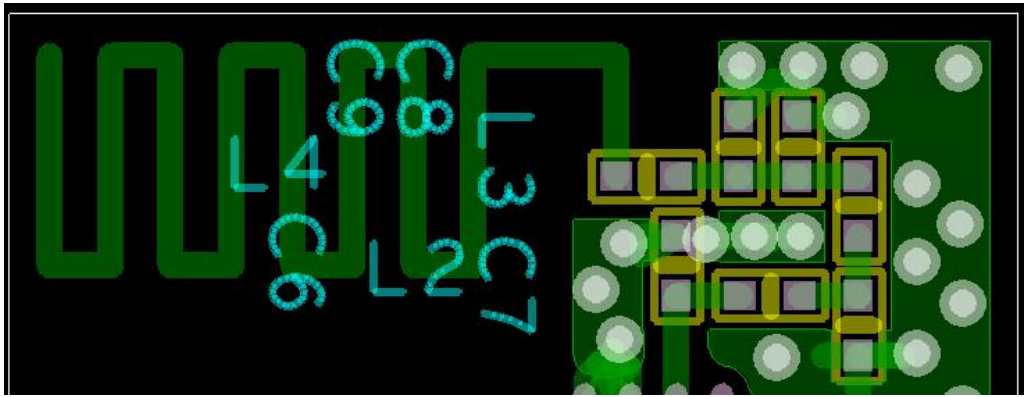

Solid Ground Plane

- The ground plane MUST be wide, solid. The ground plane from power supply to chip, then at last to RF parts MUST be solid.
- A good examples are as below.

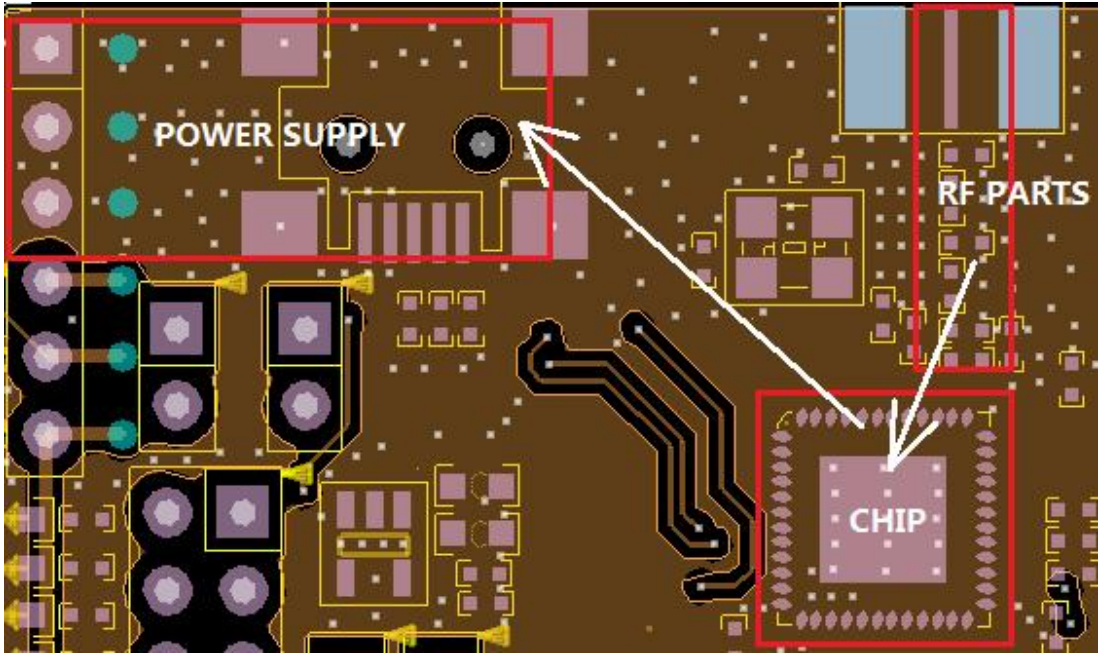

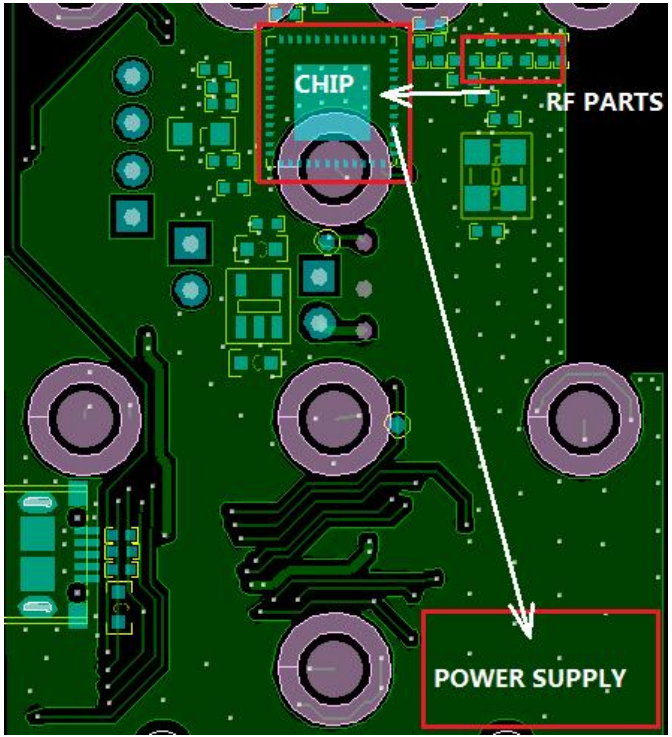

Solid Ground Plane(Cont)

- A bad example is as below.
  - Ground plane between RF parts and chip is cut off, the rx performance is greatly affected.
  - Tie them together, the RX performance matches the data on the datasheet.

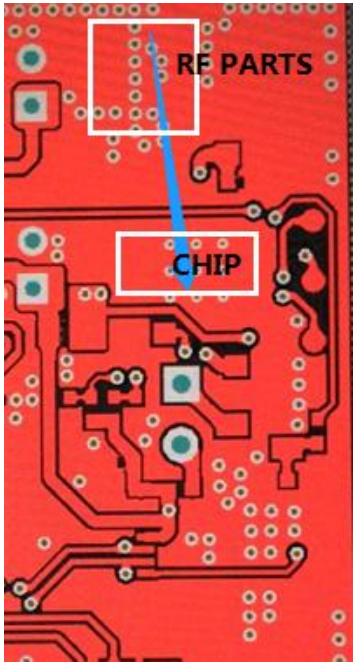

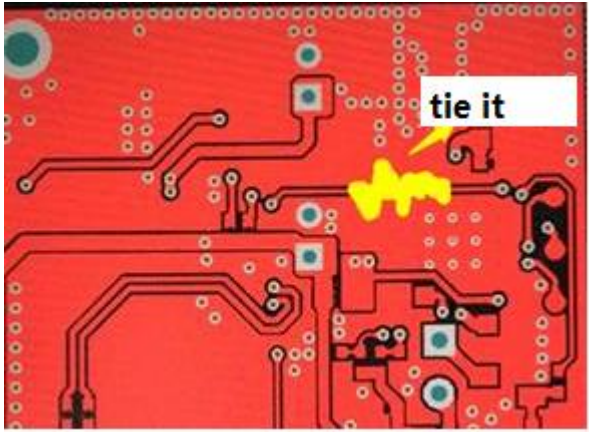

AVDD1V2 Routing RULE

- PIN18(AVDD1V2) is RF power supply, and its routing ways on PCB will have a great influence on RF;
- PIN18(AVDD1V2) routing rules:
  - The trace must be as far away from the MCU as possible, but it also needs to be avoided from being too long;
  - The following figure is used as a reference according to the ruler.

First recommendation

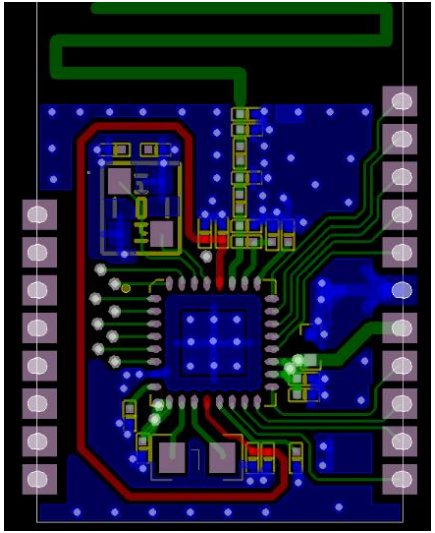

Second recommendation

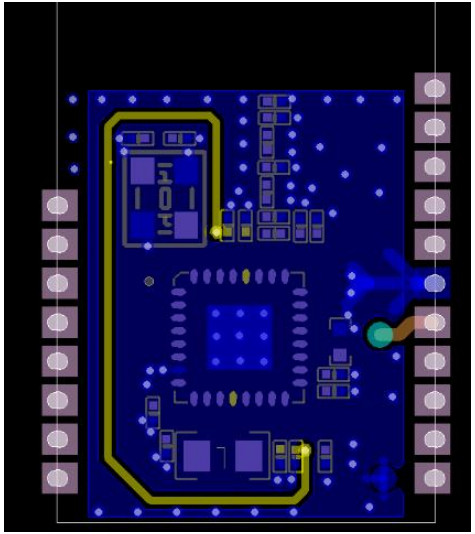

Third recommendation

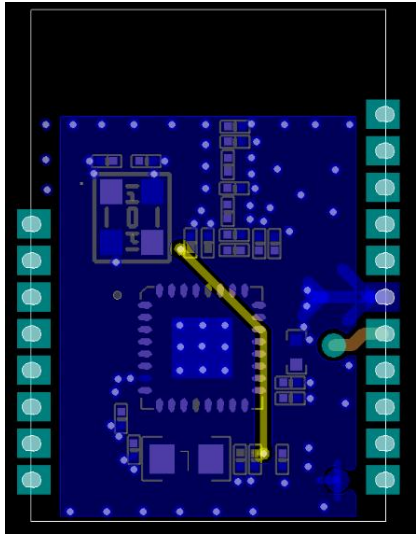

AVDD1V2 Routing RULE(Cont)

- The following picture shows the bad routing;

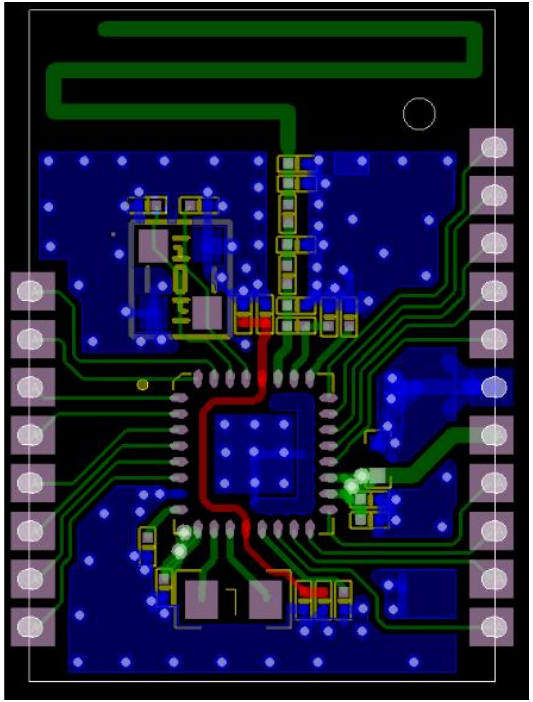

VSS PIN

- VSS pins MUST be connected to the exposed pad.
- A good example is as below.

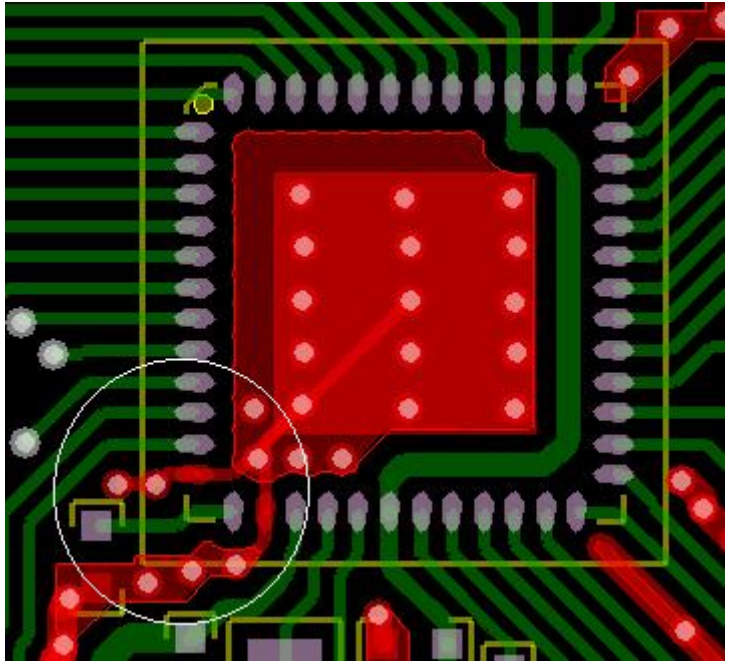

VSS PIN(Cont)

- A bad example is as below.
  - VSS pins are not tied to the exposed pad directly, the RX performance is greatly affected.
  - Re-working it, the RX performance matches the data on the datasheet.

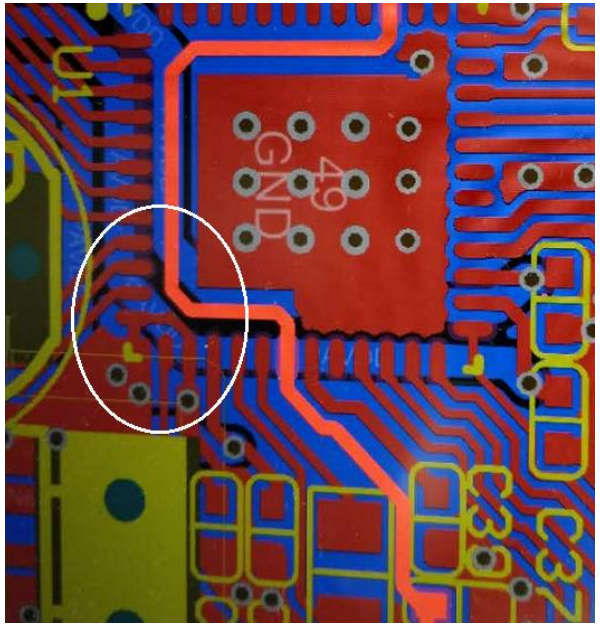

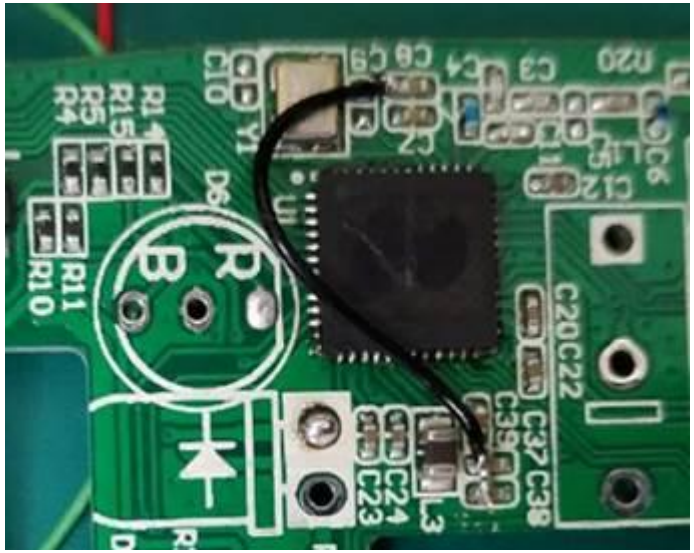

Star connection

- Power supply should be connected in star-type connection.
  - If there is no audio function, can connect them together.

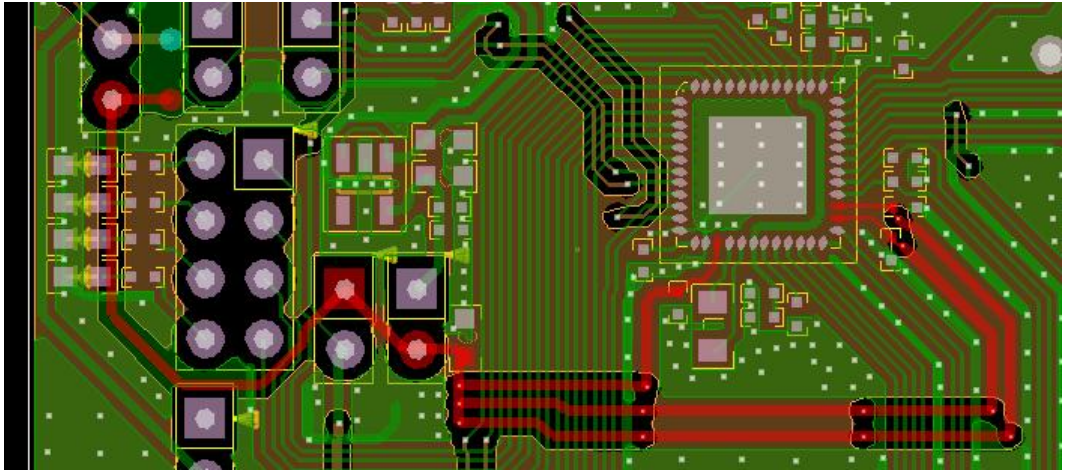

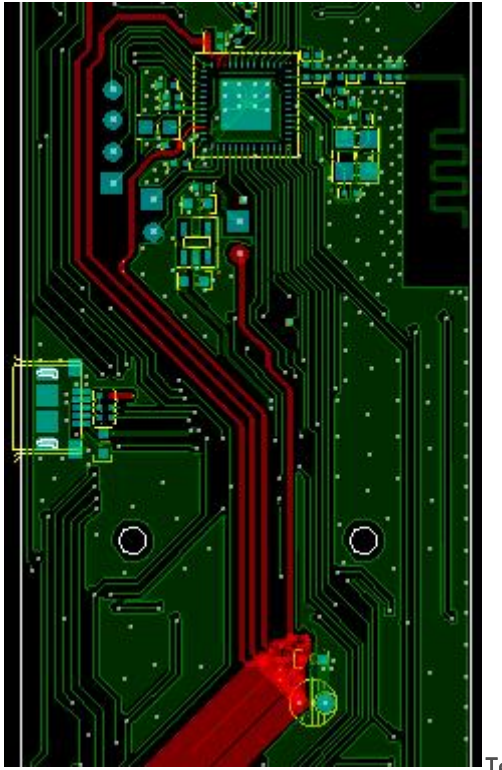

Decoupling capacitor

- Decoupling capacitors MUST be placed close to power pins.

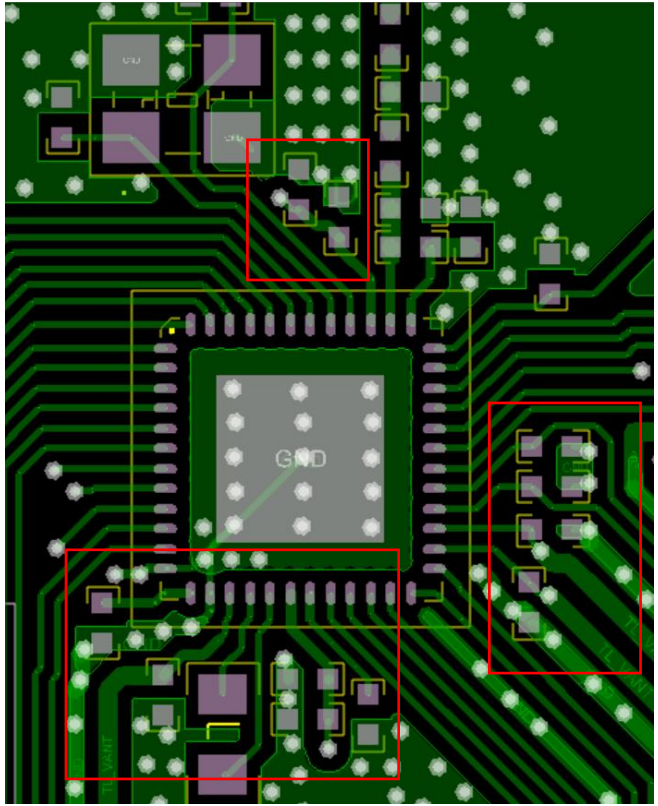

Key traces

- To avoid EMI issue, some important parts such as crystal, audio trace, mic trace and usb trace MUST be shielded by GND and via.

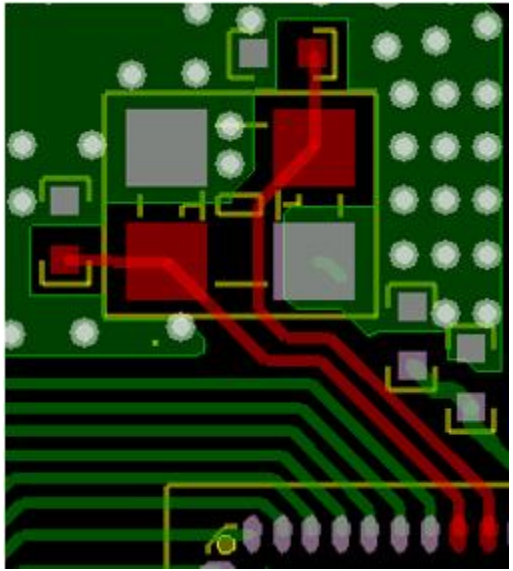

Antenna – common requirement

- Antenna trace width shouldn`t be too narrow in order to decrease loss.
- Line width should be 0.5mm or above, generally it`s recommended to be 0.5mm or 1mm.
- Top and bottom of antenna location should not be covered by GND.
- The distance between antenna and GND should be 3mm or above.
- Generally antenna length is 20mm~30mm. The smaller the GND is, the longer the antenna should be.

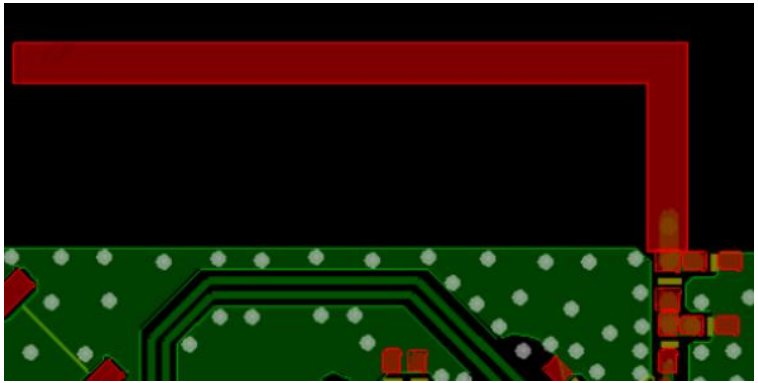

Antenna – keep away others

- Keep PCB antenna far away from metal, battery, or other components, such as 3mm or 5mm.
- A bad example is showed as below. The antenna is too close to USB connector.

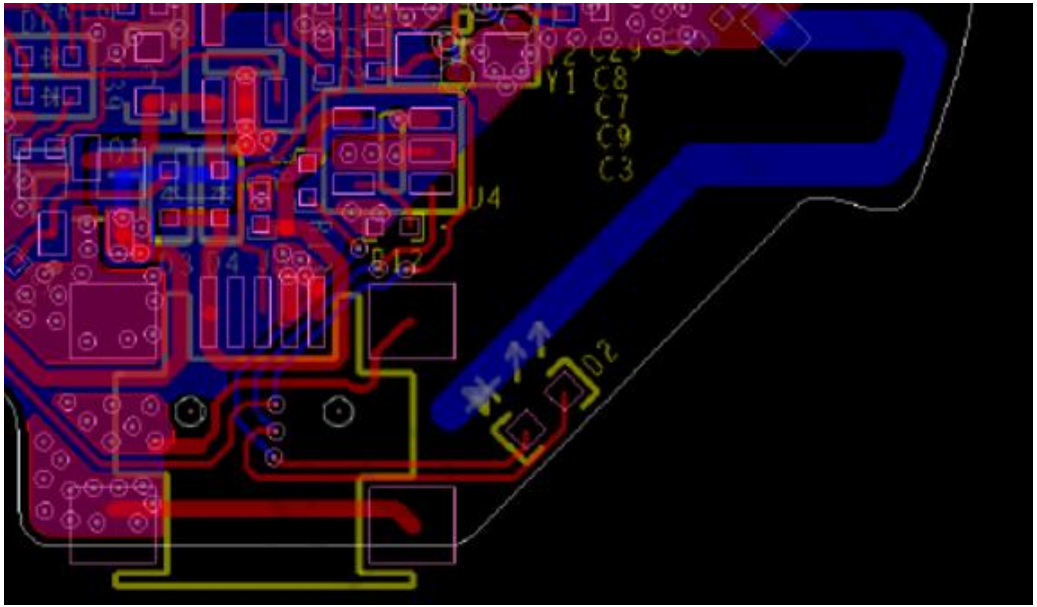

Antenna – don`t exposed to others

- There MUST be a row of via holes along the antenna on the side parallel to GND. Do not directly expose trace or pad to the antenna.
- The left is a good example. The right is a bad example.

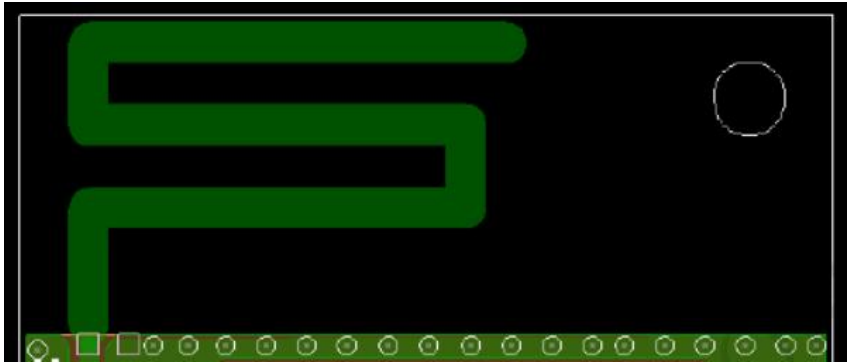

Antenna – matching components

- Antenna matching components should be placed at the boundary of antenna and GND without shrink inward or expand outward.
- The left is a good example. The right is a bad example.

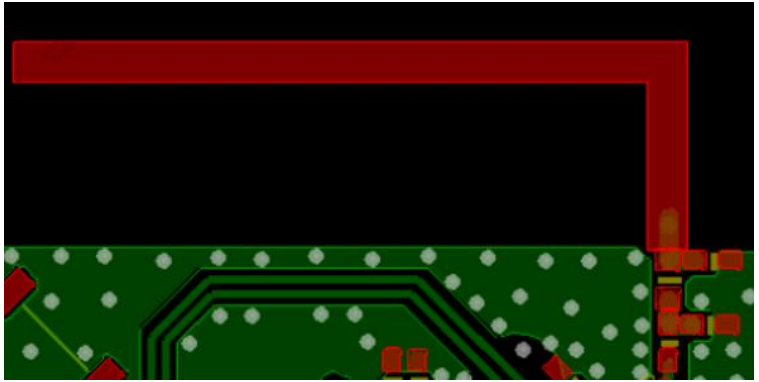

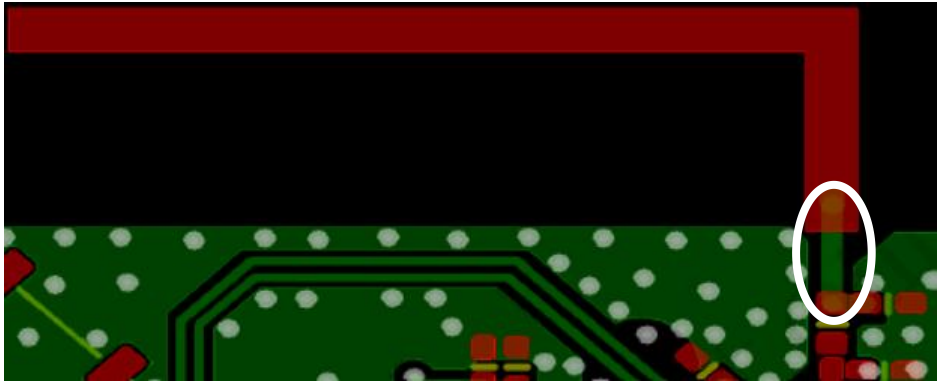

Antenna – impedance design

- The RF line to the antenna port should be short. If RF trace can`t be designed shortly, it must be designed as 50ohm micro-strip line.
- The left is a good example. The right is a bad example.

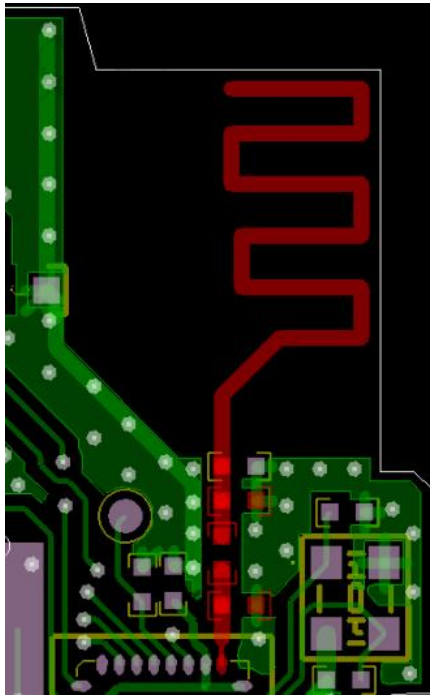

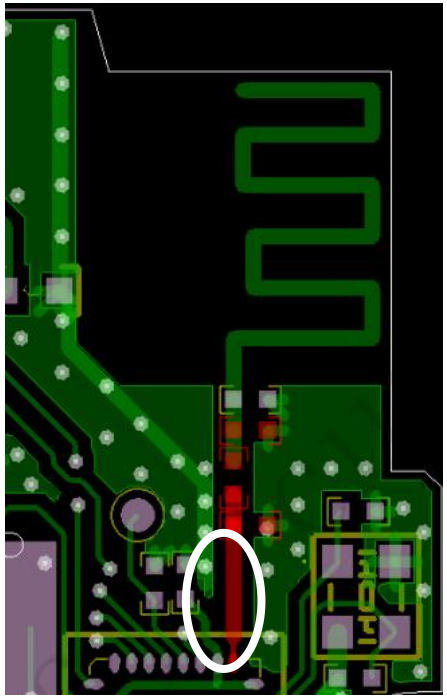

Change Logs

- 2020.04.01
  - Initial version
- 2020.04.07:
  - Modify SPI part, PD5 to PD6
- 2020.04.10:
  - Introduce how to design RF supply trace.
  - Shielding box is suggested.
- 2021.06.08:
  - Update some pictures.
- 2022.08.14:
  - Added description to GPIO interface section
- 2025.06.19:
  - Update the official website links of products.