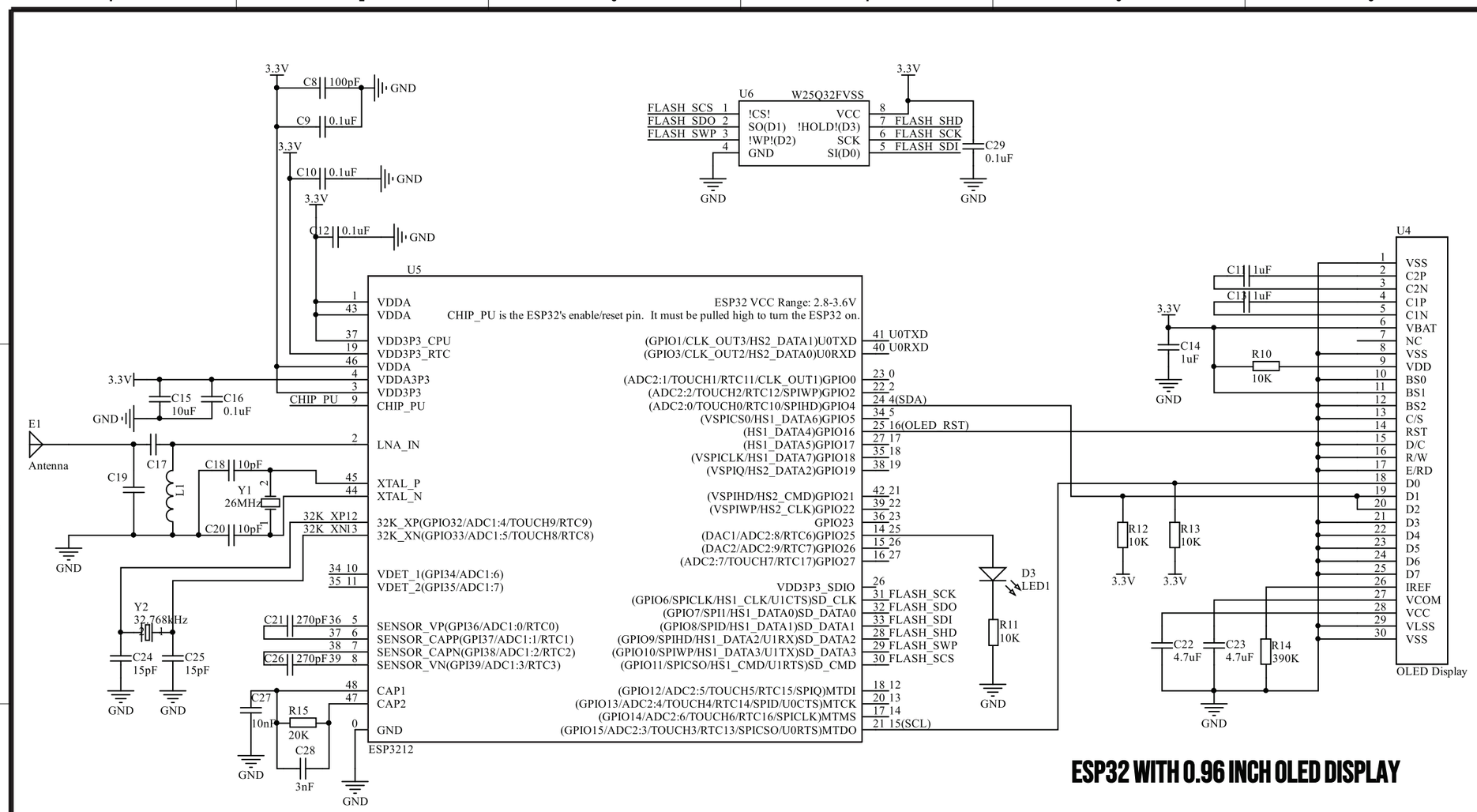

ESP32 WITH 0.96 INCH OLED DISPLAY

CP2102

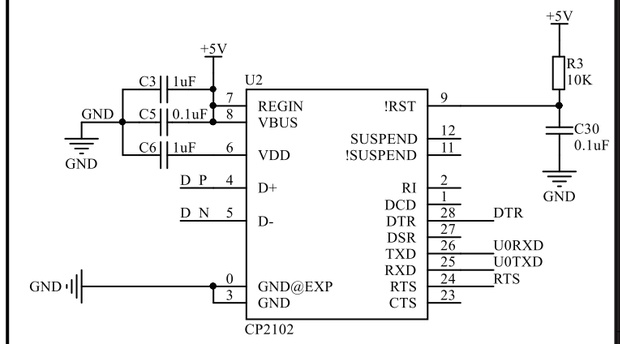

HEADER

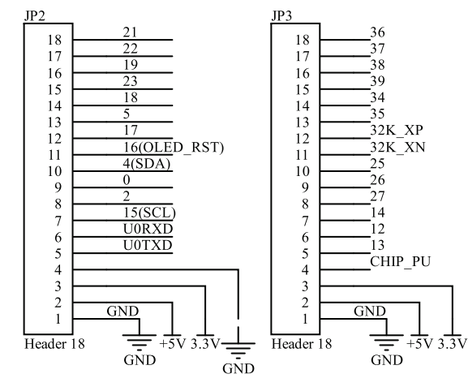

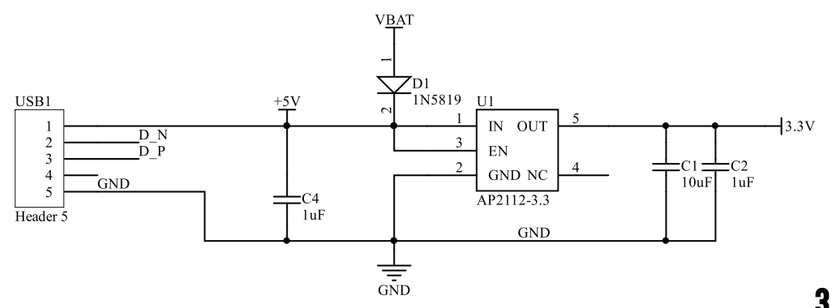

3.3V LDO

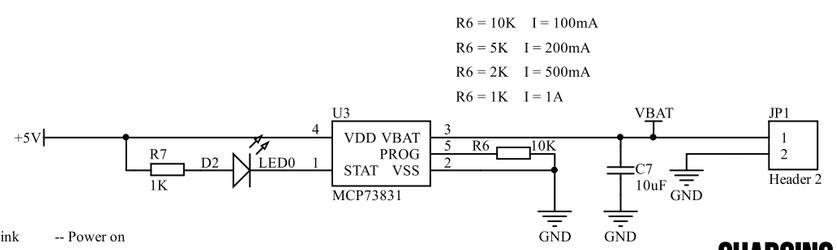

LED0 Blink -- Power on
Bright -- Charging
Shut down -- Charging over

CHARGING CIRCUIT

PROGRAMMING LOGIC

Auto-Reset

Boot Mode Configuration

Pin	Default	Boot	Download
GPIO0	1	1	0
U0TXD	1	1	x
GPIO2	0	x	0
GPIO4	0	x	x
MTDO	1	x	x
GPIO5	1	1	x

If U0TXD, GPIO2, GPIO5 are floating, GPIO0 determines boot mode

If DTR is LOW, toggling RTS from HIGH to LOW resets to run mode.

If RTS is HIGH, toggling DTR from LOW to HIGH resets to bootloader.

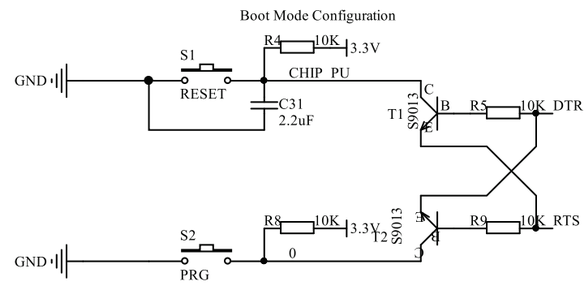

GREENHOUSE TENDER | ESP32 WIFI BOARD

VERSION 1.0.0

HTTPS://PATRYAN.COM