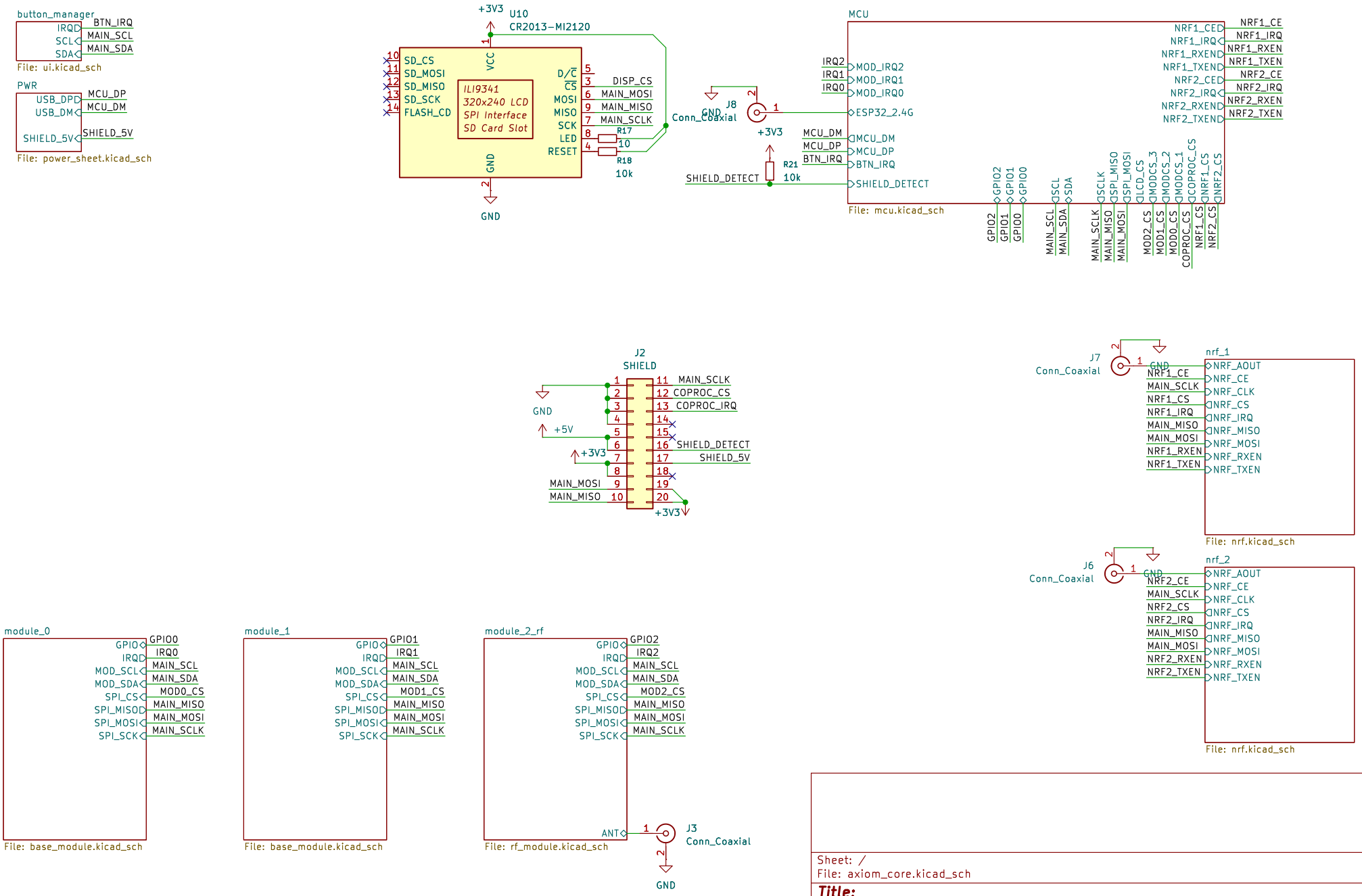
button_manager
IRQD
SCL
SDA
BTN_IRQ
MAIN_SCL
MAIN_SDA
File: ui.kicad_sch
PWR
USB_DPD
USB_DM
SHIELD_5V
MCU_DP
MCU_DM
SHIELD_5V
File: power_sheet.kicad_sch
+3V3
U10
CR2013-MI2120
SD_CS
SD_MOSI
SD_MISO
SD_SCK
FLASH_CD
VCC
GND
ILI9341
320x240 LCD
SPI Interface
SD Card Slot
D/C
CS
MOSI
MISO
SCK
LED
RESET
DISP_CS
MAIN_MOSI
MAIN_MISO
MAIN_SCLK
R17
10
R18
10k
GND
J8
Conn_Coaxial
+3V3
R21
10k
SHIELD_DETECT
MCU
IRQ2
IRQ1
IRQ0
MOD_IRQ2
MOD_IRQ1
MOD_IRQ0
ESP32_2.4G
MCU_DM
MCU_DP
BTN_IRQ
SHIELD_DETECT
NRF1_CED
NRF1_IRQ
NRF1_RXEND
NRF1_TXEND
NRF2_CED
NRF2_IRQ
NRF2_RXEND
NRF2_TXEND
NRF1_CE
NRF1_IRQ
NRF1_RXEN
NRF1_TXEN
NRF2_CE
NRF2_IRQ
NRF2_RXEN
NRF2_TXEN
GPIO2
GPIO1
GPIO0
SCL
SDA
SCLK
SPI_MISO
SPI_MOSI
LCD_CS
MODCS_3
MODCS_2
MODCS_1
COPROC_CS
NRF1_CS
NRF2_CS
MOD2_CS
MOD1_CS
MOD0_CS
File: mcu.kicad_sch
J2
SHIELD
GND
+5V
+3V3
MAIN_MOSI
MAIN_MISO
MAIN_SCLK
COPROC_CS
COPROC_IRQ
SHIELD_DETECT
SHIELD_5V
+3V3
J7
Conn_Coaxial
nrf_1
GND
NRF1_CE
MAIN_SCLK
NRF1_CS
NRF1_IRQ
MAIN_MISO
MAIN_MOSI
NRF1_RXEN
NRF1_TXEN
NRF_AOUT
NRF_CE
NRF_CLK
NRF_CS
NRF_IRQ
NRF_MISO
NRF_MOSI
NRF_RXEN
NRF_TXEN
File: nrf.kicad_sch
J6
Conn_Coaxial
nrf_2
GND
NRF2_CE
MAIN_SCLK
NRF2_CS
NRF2_IRQ
MAIN_MISO
MAIN_MOSI
NRF2_RXEN
NRF2_TXEN
NRF_AOUT
NRF_CE
NRF_CLK
NRF_CS
NRF_IRQ
NRF_MISO
NRF_MOSI
NRF_RXEN
NRF_TXEN
File: nrf.kicad_sch
module_0
GPIO
IRQD
MOD_SCL
MOD_SDA
SPI_CS
SPI_MISOD
SPI_MOSI
SPI_SCK
GPIO0
IRQ0
MAIN_SCL
MAIN_SDA
MOD0_CS
MAIN_MISO
MAIN_MOSI
MAIN_SCLK
File: base_module.kicad_sch
module_1
GPIO1
IRQ1
MOD1_CS
File: base_module.kicad_sch
module_2_rf
GPIO2
IRQ2
MOD2_CS
ANT
File: rf_module.kicad_sch
J3
Conn_Coaxial
GND
Sheet: /
File: axiom_core.kicad_sch
Title:
Size: A4
Date:
Rev:
KiCad E.D.A. 9.0.7
Id: 1/9

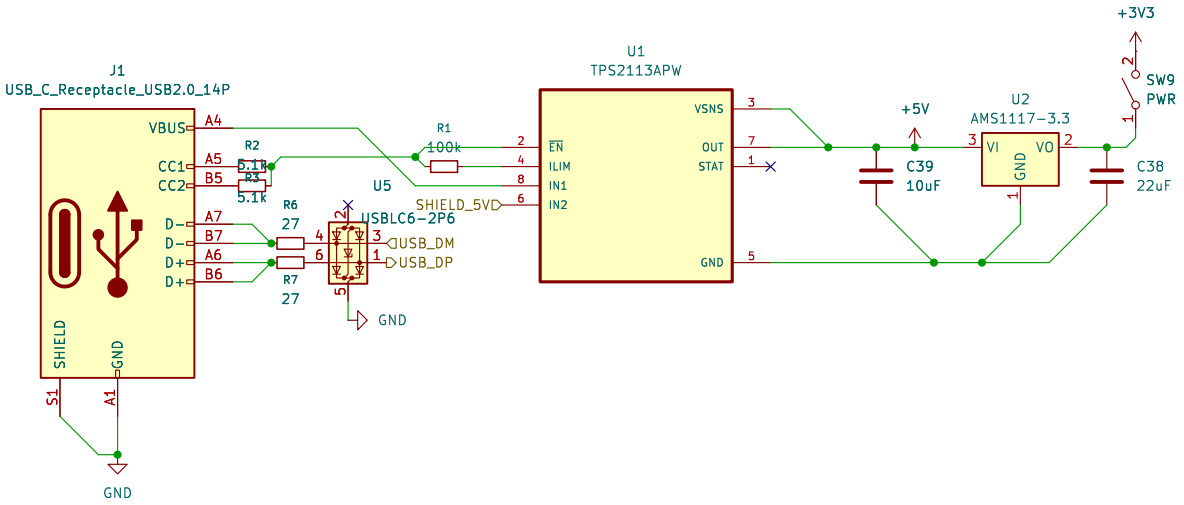

Sheet: /PWR/
File: power_sheet.kicad_sch

Title:

Size: A4	Date:	**Rev:**
KiCad E.D.A. 9.0.7		Id: 2/9

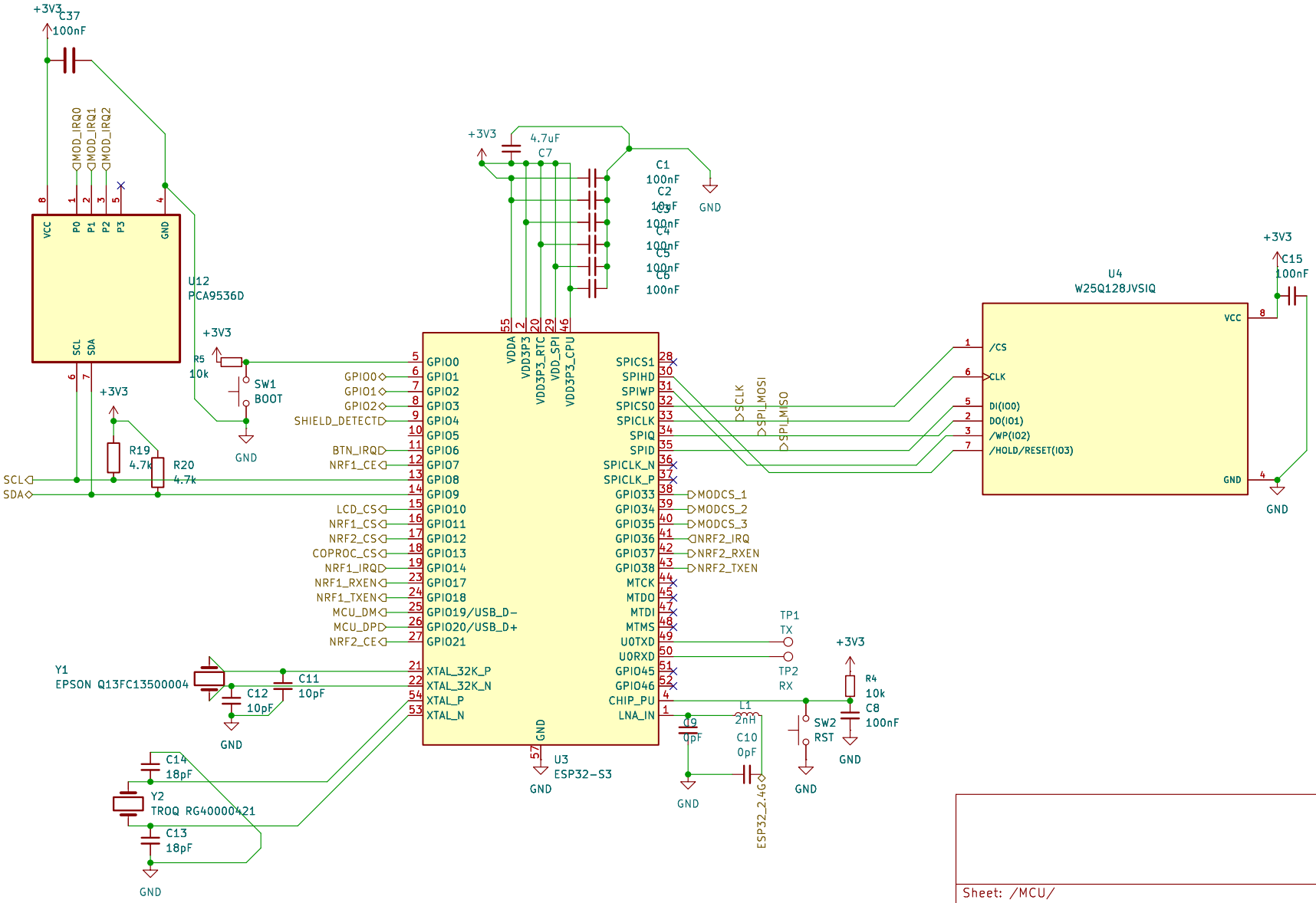

Sheet: /MCU/
File: mcu.kicad_sch

Title:

Size: A4	Date:	Rev:
KiCad E.D.A. 9.0.7		Id: 3/9

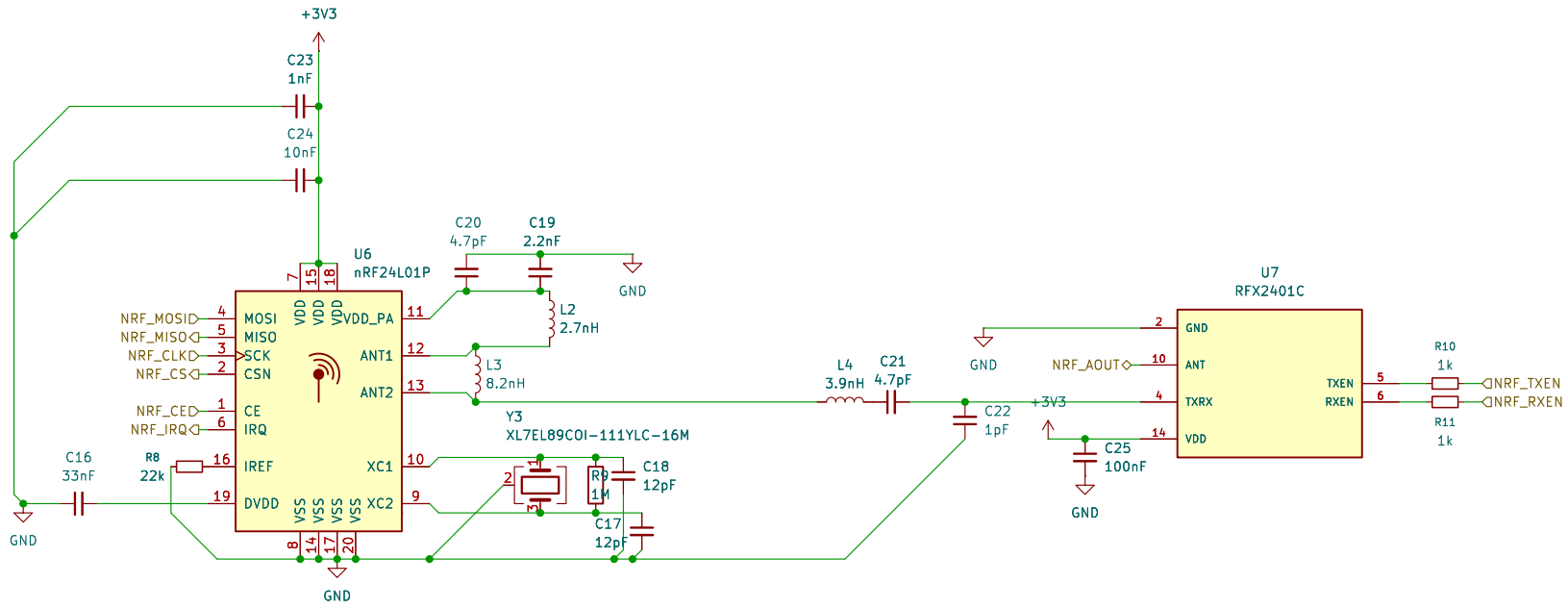

Sheet: /nrf_1/
File: nrf.kicad_sch

Title:

Size: A4	Date:	Rev:
KiCad E.D.A. 9.0.7		Id: 4/9

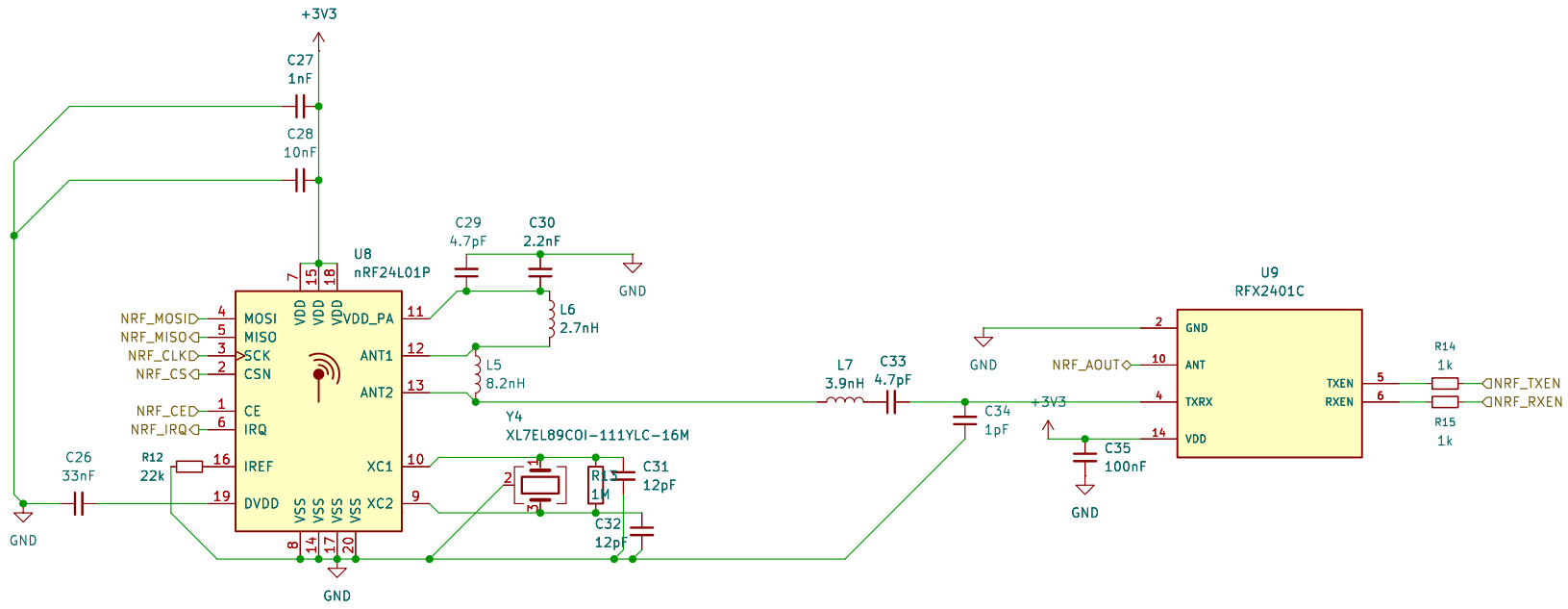

Sheet: /nrf_2/
File: nrf.kicad_sch

Title:

Size: A4	Date:	Rev:
KiCad E.D.A. 9.0.7		Id: 5/9

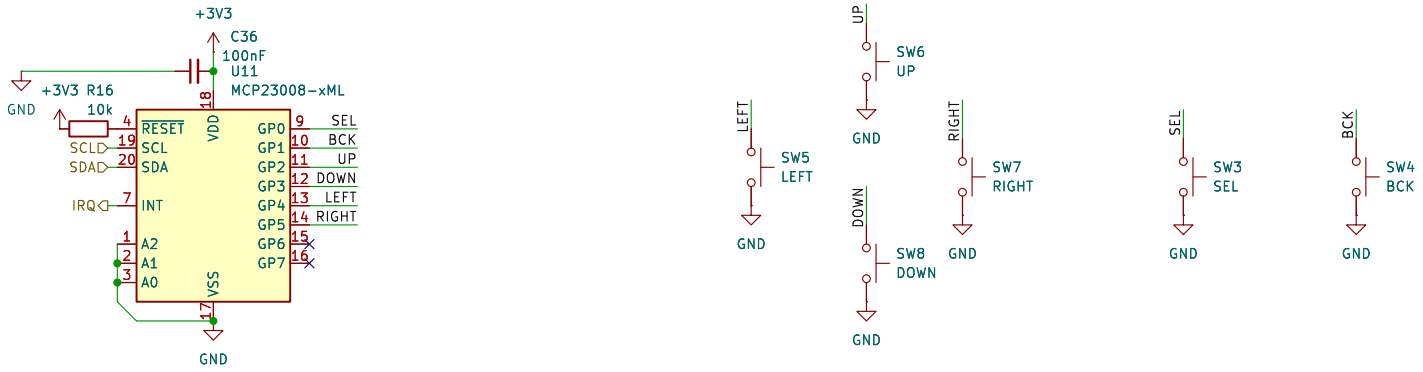

Sheet: /button_manager/
File: ui.kicad_sch

Title:

Size: A4	Date:	Rev:
KiCad E.D.A. 9.0.7		Id: 6/9

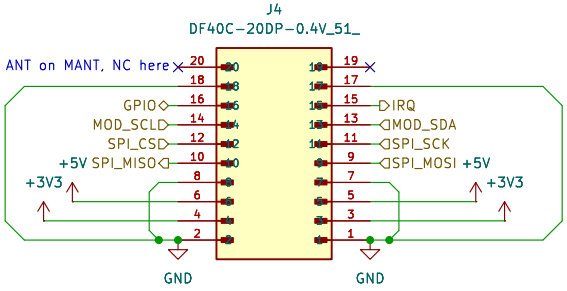

Sheet: /module_0/
File: base_module.kicad_sch

Title:

Size: A4	Date:	**Rev:**
KiCad E.D.A. 9.0.7		Id: 7/9

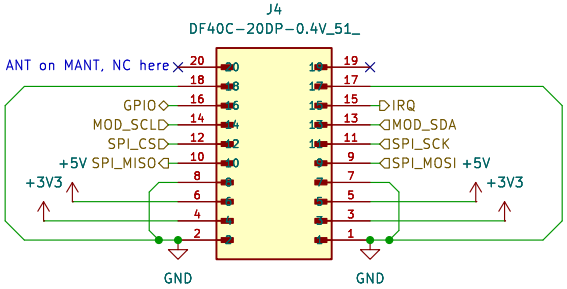

Sheet: /module_1/
File: base_module.kicad_sch

Title:

Size: A4	Date:	**Rev:**
KiCad E.D.A. 9.0.7		Id: 8/9

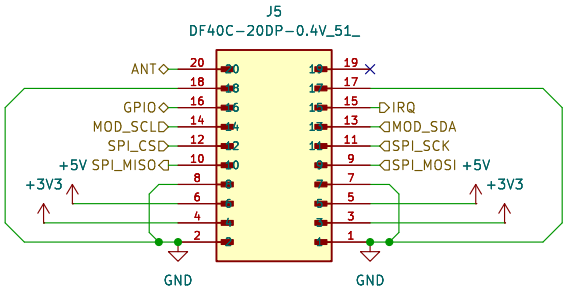

Sheet: /module_2_rf/
File: rf_module.kicad_sch

Title:

Size: A4	Date:	**Rev:**
KiCad E.D.A. 9.0.7		Id: 9/9