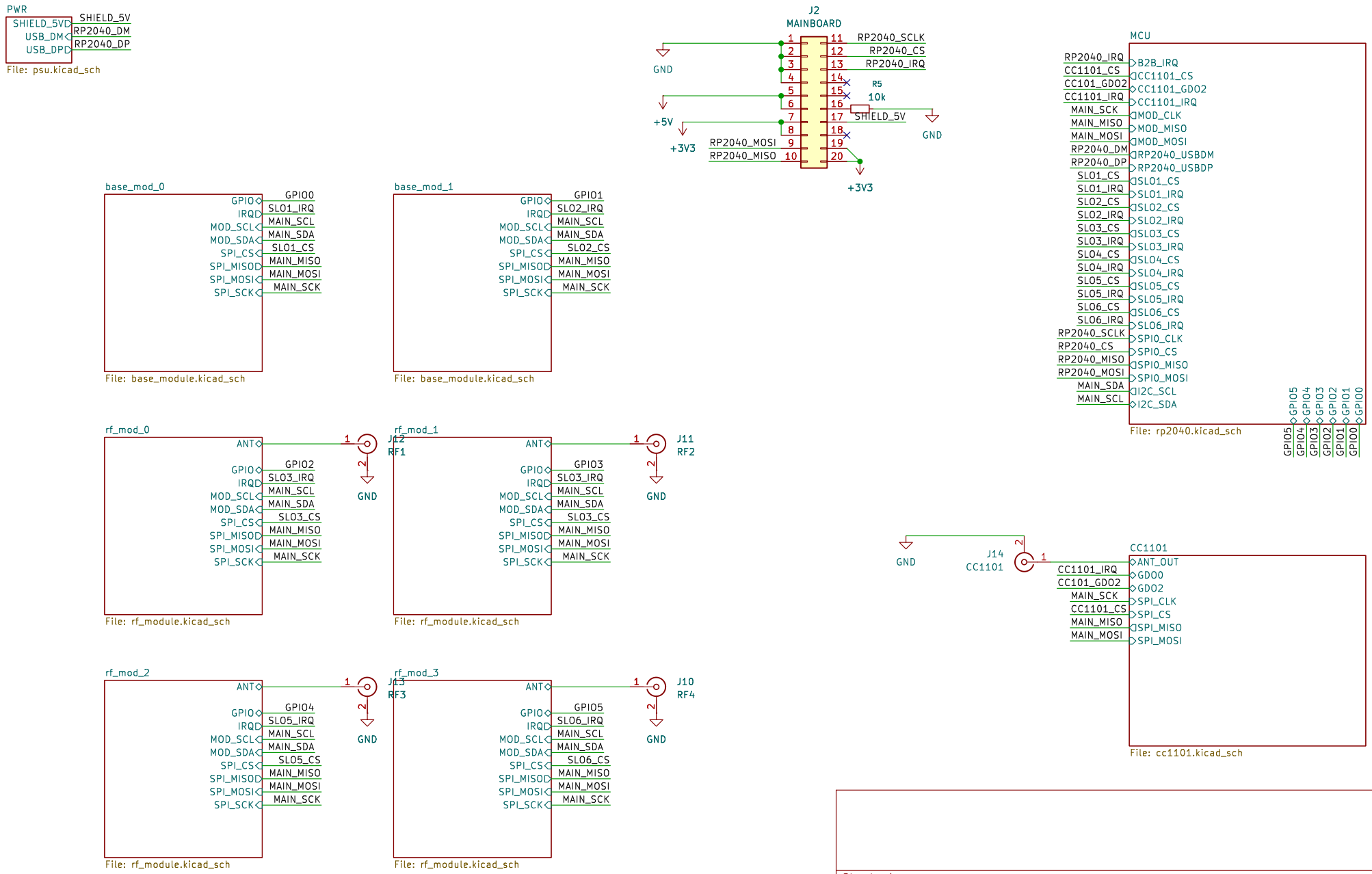

Sheet: /
File: axiom_shield.kicad_sch

Title:

Size: A4	Date:	Rev:
KiCad E.D.A. 9.0.7		Id: 1/10

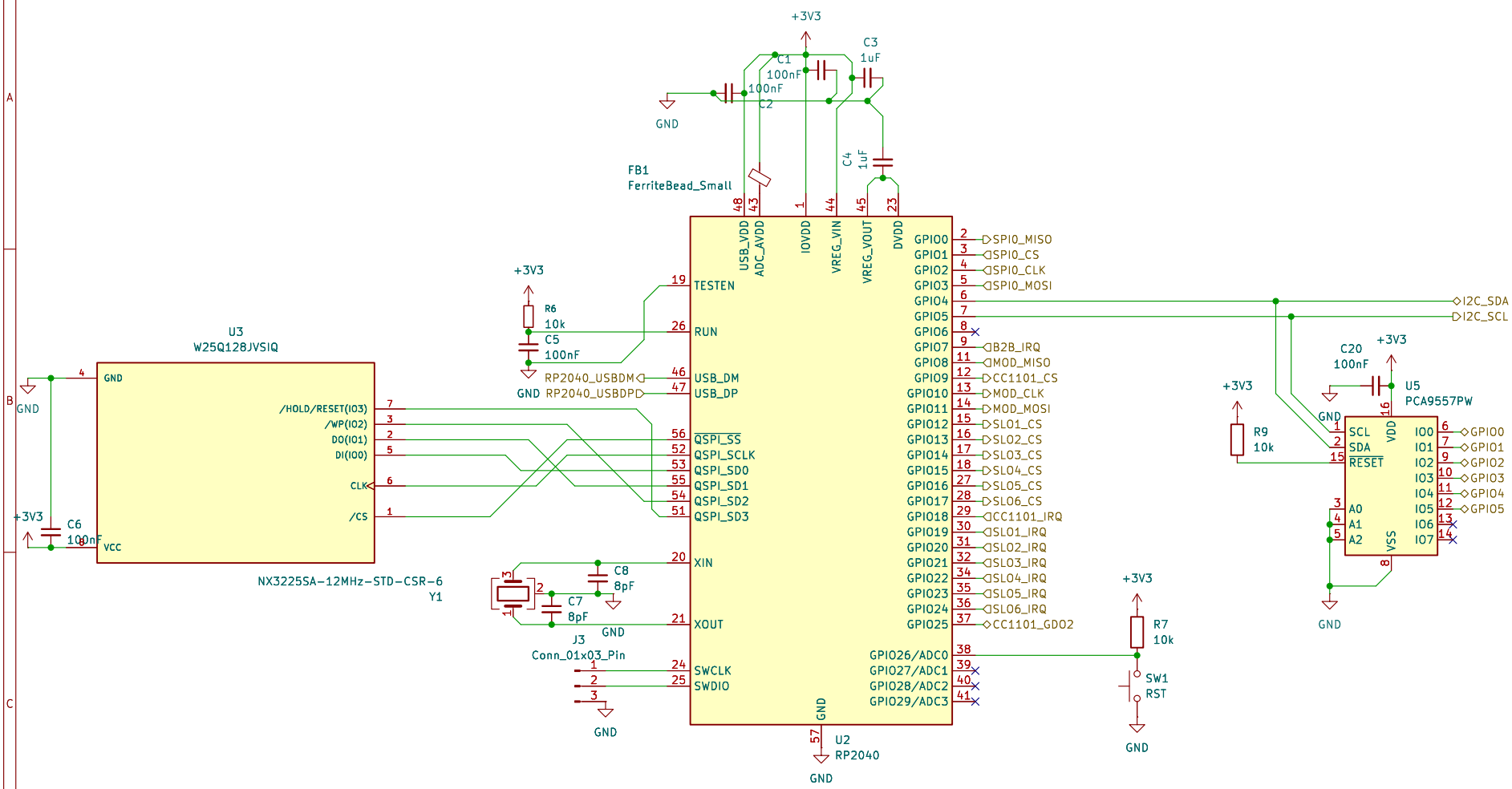

Sheet: /MCU/
File: rp2040.kicad_sch

Title:

Size: A4	Date:	Rev:
KiCad E.D.A. 9.0.7		Id: 2/10

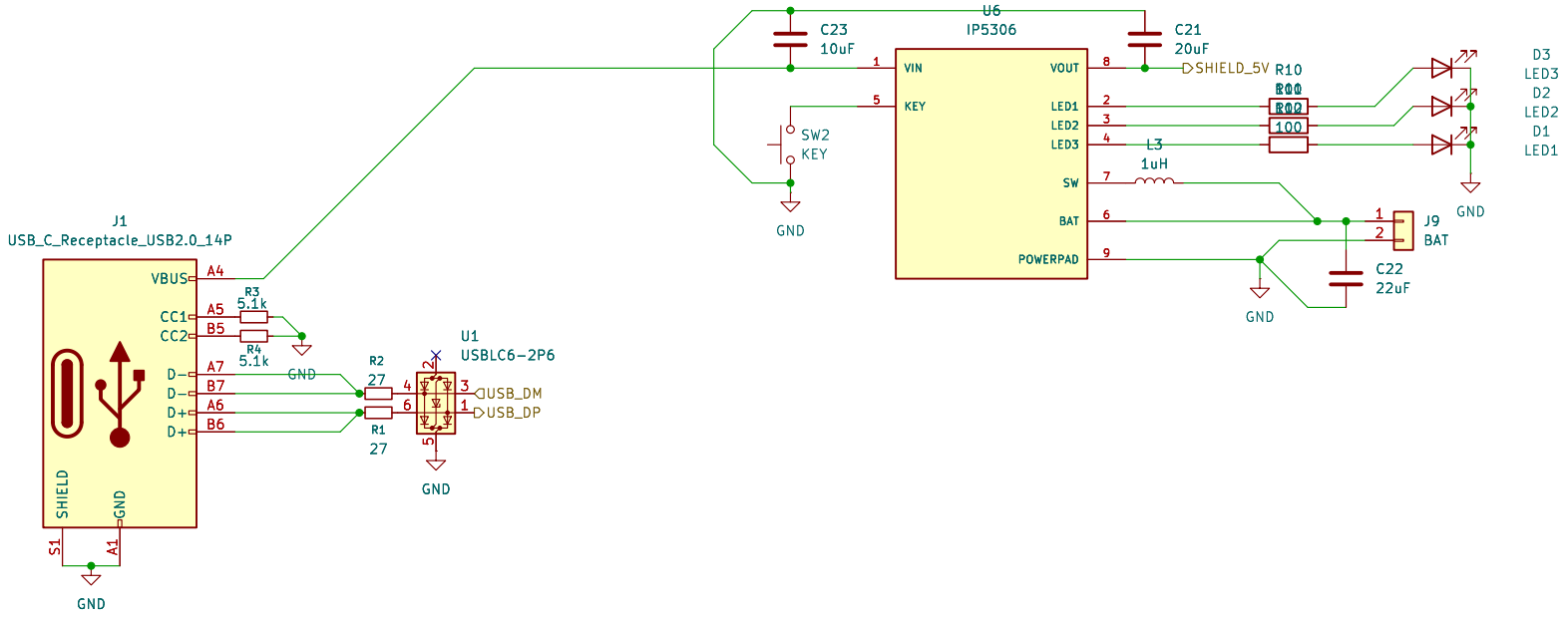

Sheet: /PWR/
File: psu.kicad_sch

Title:

Size: A4	Date:	Rev:
KiCad E.D.A. 9.0.7		Id: 3/10

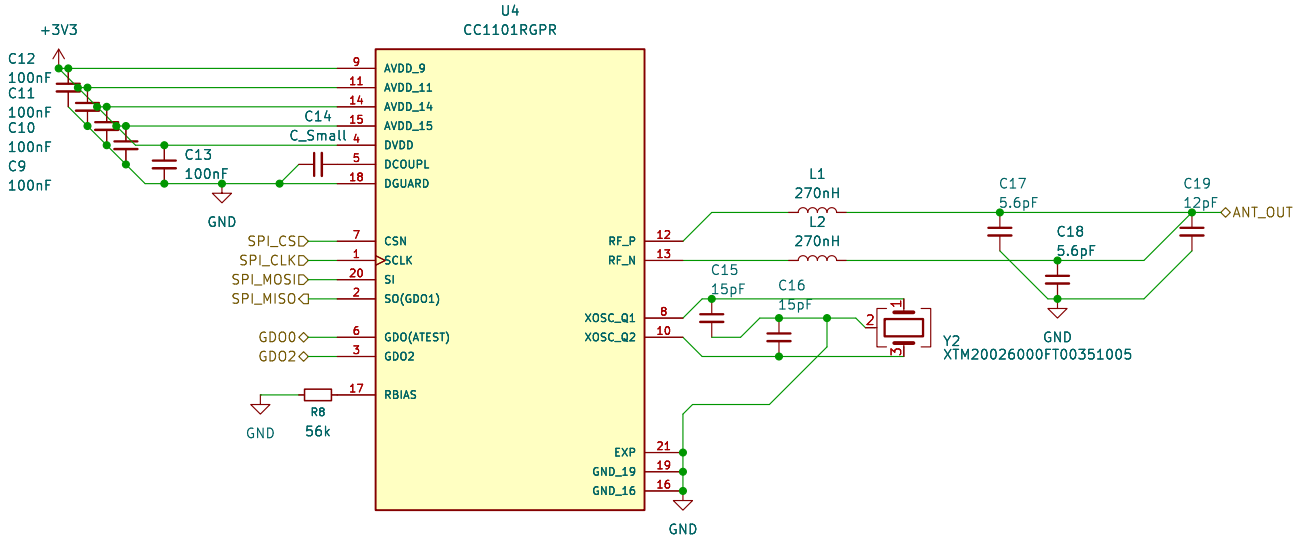

Sheet: /CC1101/
File: cc1101.kicad_sch

Title:

Size: A4	Date:	Rev:
KiCad E.D.A. 9.0.7		Id: 4/10

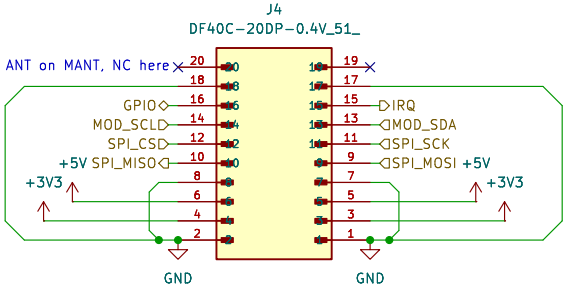

Sheet: /base_mod_0/
File: base_module.kicad_sch

Title:

Size: A4	Date:	**Rev:**
KiCad E.D.A. 9.0.7		Id: 5/10

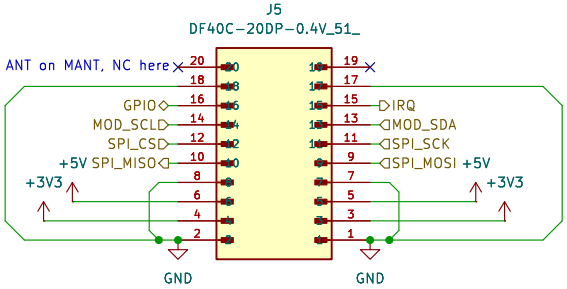

Sheet: /base_mod_1/
File: base_module.kicad_sch

Title:

Size: A4	Date:	**Rev:**
KiCad E.D.A. 9.0.7		Id: 6/10

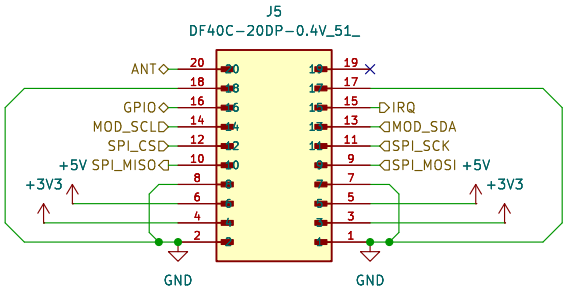

Sheet: /rf_mod_0/
File: rf_module.kicad_sch

Title:

Size: A4	Date:	**Rev:**
KiCad E.D.A. 9.0.7		Id: 7/10

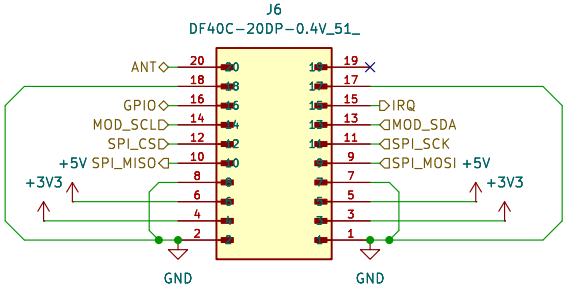

Sheet: /rf_mod_1/
File: rf_module.kicad_sch

Title:

Size: A4	Date:	**Rev:**
KiCad E.D.A. 9.0.7		Id: 8/10

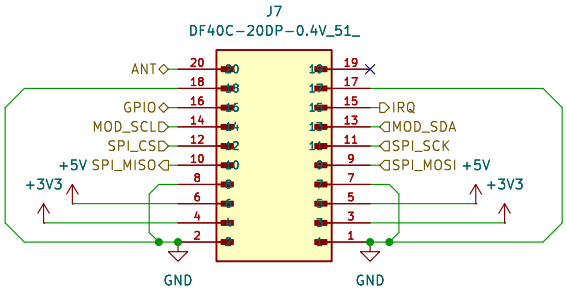

Sheet: /rf_mod_2/
File: rf_module.kicad_sch

Title:

Size: A4	Date:	**Rev:**
KiCad E.D.A. 9.0.7		Id: 9/10

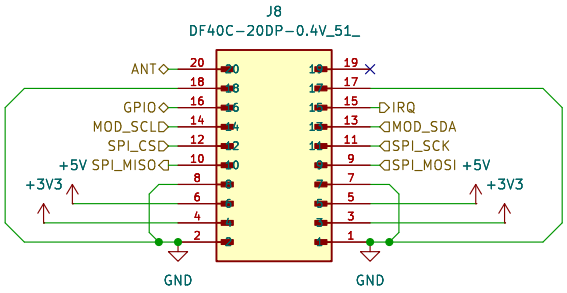

Sheet: /rf_mod_3/
File: rf_module.kicad_sch

Title:

Size: A4	Date:	**Rev:**
KiCad E.D.A. 9.0.7		Id: 10/10