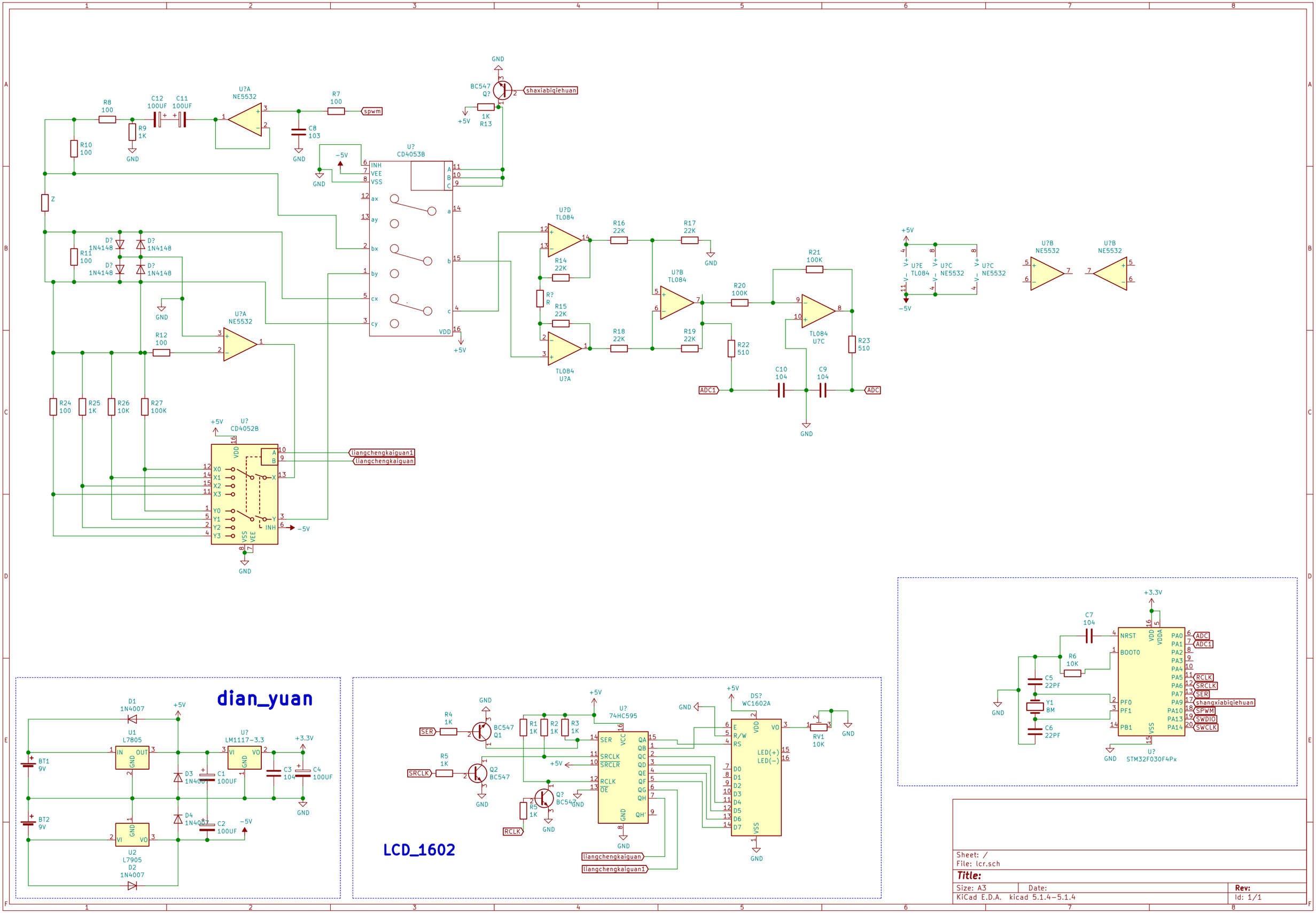

Sheet: /
File: lcr.sch

Title:

Size: A3	Date:	Rev:
KiCad E.D.A. kicad 5.1.4-5.1.4		Id: 1/1