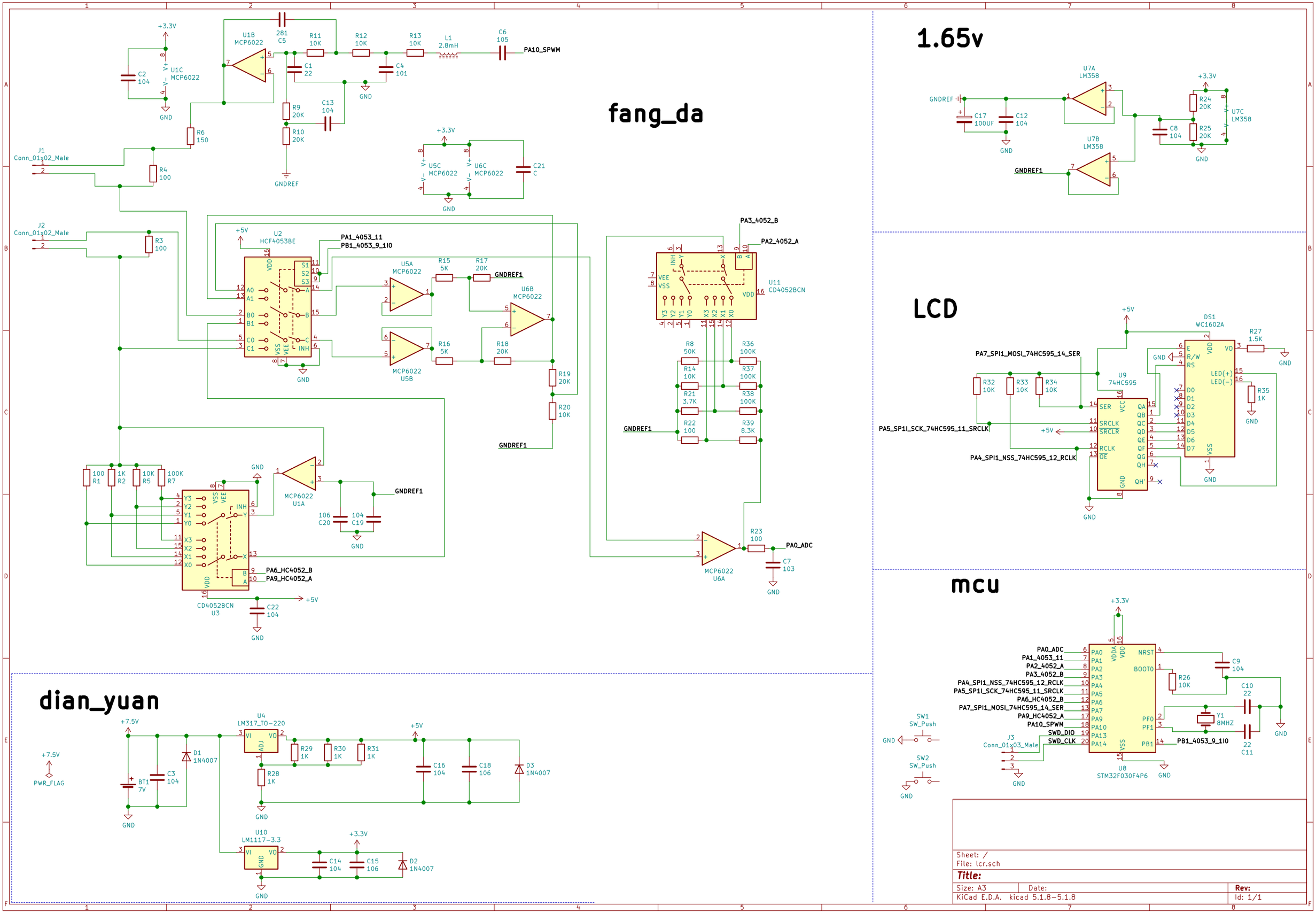
fang_da
1.65v
LCD
mcu
dian_yuan
U1B MCP6022
U1C MCP6022
U5C MCP6022
U6C MCP6022
U5A MCP6022
U5B MCP6022
U6B MCP6022
U1A MCP6022
U6A MCP6022
U2 HCF4053BE
U3 CD4052BCN
U11 CD4052BCN
U7A LM358
U7B LM358
U7C LM358
U9 74HC595
DS1 WC1602A
U8 STM32F030F4P
U4 LM317_TO-220
U10 LM1117-3.3
J1 Conn_01x02_Male
J2 Conn_01x02_Male
J3 Conn_01x03_Male
SW1 SW_Push
SW2 SW_Push
PA10_SPWM
PA1_4053_11
PB1_4053_9_1I0
PA3_4052_B
PA2_4052_A
PA0_ADC
PA6_HC4052_B
PA9_HC4052_A
PA7_SPI1_MOSI_74HC595_14_SER
PA5_SPI1_SCK_74HC595_11_SRCLK
PA4_SPI1_NSS_74HC595_12_RCLK
SWD_DIO
SWD_CLK
GNDREF
GNDREF1
GND
+3.3V
+5V
+7.5V
PWR_FLAG
Sheet: /
File: lcr.sch
Title:
Size: A3
Date:
Rev:
KiCad E.D.A. kicad 5.1.8-5.1.8
Id: 1/1