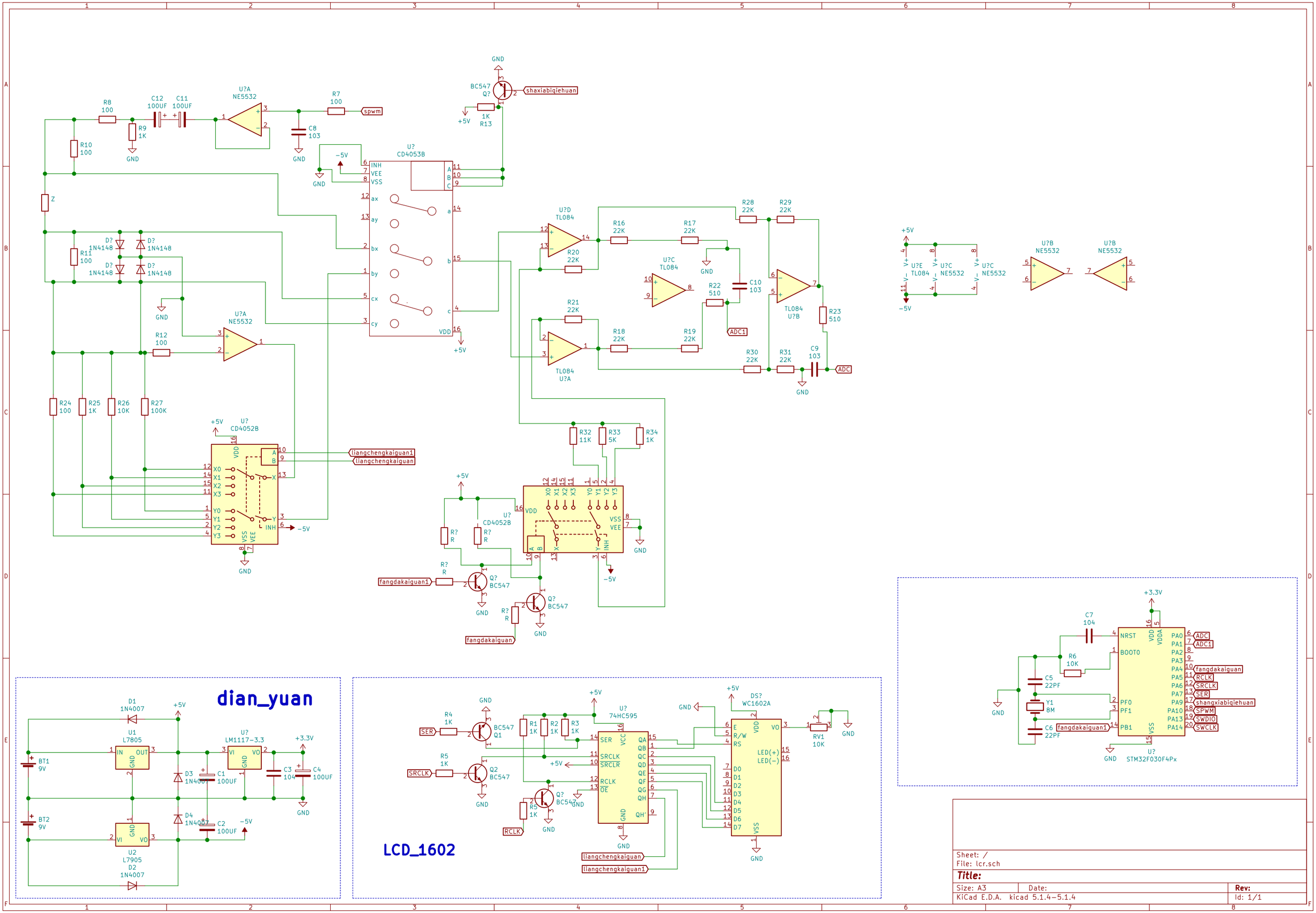
U?A
NE5532
R8
100
C12
100UF
C11
100UF
R7
100
spwm
R9
1K
GND
C8
103
R10
100
Z
U?
CD4053B
INH
VEE
VSS
ax
ay
bx
by
cx
cy
a
b
c
A
B
C
VDD
-5V
+5V
BC547
Q?
shaxiabiqiehuan
1K
R13
D?
1N4148
R11
100
R12
100
U?D
TL084
R16
22K
R17
22K
R28
22K
R29
22K
R20
22K
U?C
TL084
R22
510
C10
103
ADC1
R21
22K
R18
22K
R19
22K
R23
510
R30
22K
R31
22K
C9
103
ADC
U?A
TL084
U?B
TL084
U?E
TL084
U?C
NE5532
U?B
NE5532
R24
100
R25
1K
R26
10K
R27
100K
U?
CD4052B
X0
X1
X2
X3
Y0
Y1
Y2
Y3
liangchengkaiguan1
liangchengkaiguan
R32
11K
R33
5K
R34
1K
R?
R
Q?
BC547
fangdakaiguan1
fangdakaiguan
dian_yuan
D1
1N4007
U1
L7805
IN
OUT
U?
LM1117-3.3
VI
VO
+3.3V
BT1
9V
BT2
9V
D3
1N4007
C1
100UF
C3
104
C4
100UF
D4
1N4007
C2
100UF
U2
L7905
D2
1N4007
LCD_1602
SER
SRCLK
RCLK
R4
1K
R5
1K
R1
1K
R2
1K
R3
1K
R6
1K
U?
74HC595
SRCLR
OE
QA
QB
QC
QD
QE
QF
QG
QH
QH'
DS?
WC1602A
E
R/W
RS
D0
D1
D2
D3
D4
D5
D6
D7
LED(+)
LED(-)
RV1
10K
U?
STM32F030F4Px
NRST
BOOT0
PF0
PF1
PB1
VDD
VDDA
VSS
PA0
PA1
PA2
PA3
PA4
PA5
PA6
PA7
PA9
PA10
PA13
PA14
ADC
ADC1
fangdakaiguan
RCLK
SRCLK
SER
shangxiabiqiehuan
SPWM
SWDIO
SWCLK
C7
104
R6
10K
C5
22PF
Y1
8M
C6
22PF
+3.3V
Sheet: /
File: lcr.sch
Title:
Size: A3
Date:
Rev:
KiCad E.D.A. kicad 5.1.4-5.1.4
Id: 1/1