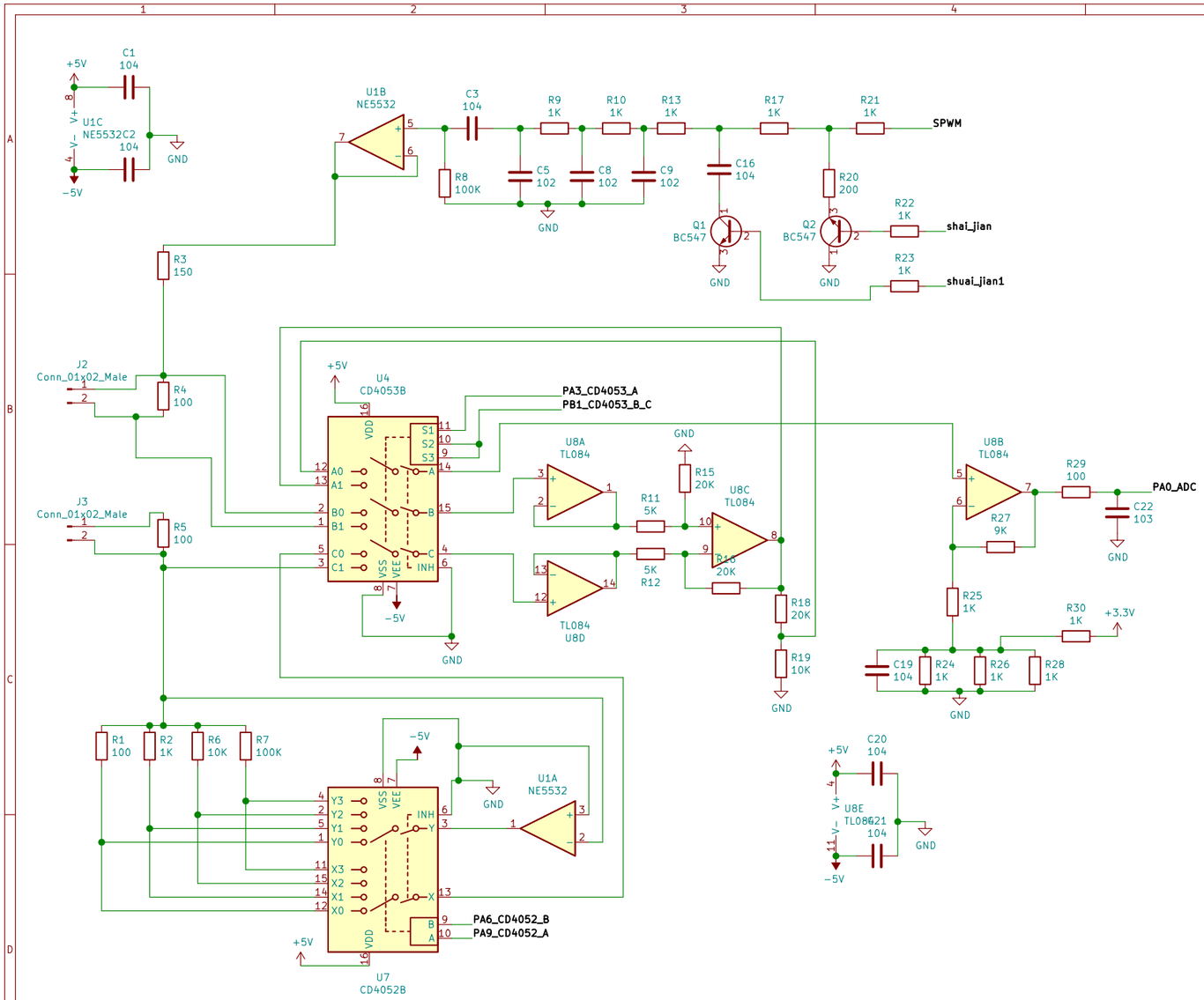

LCD

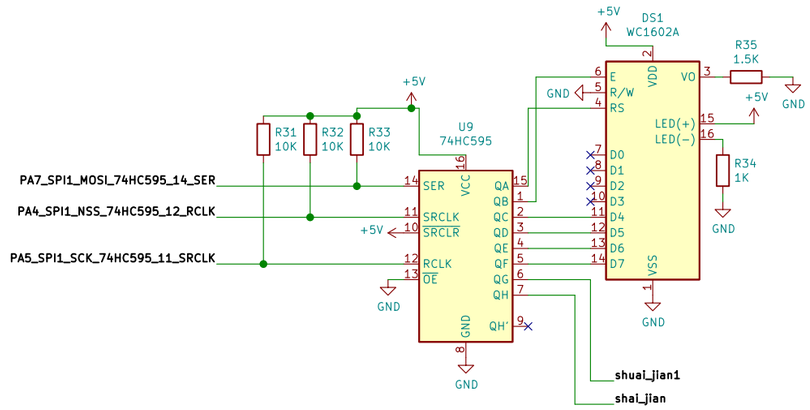

dian_yuan

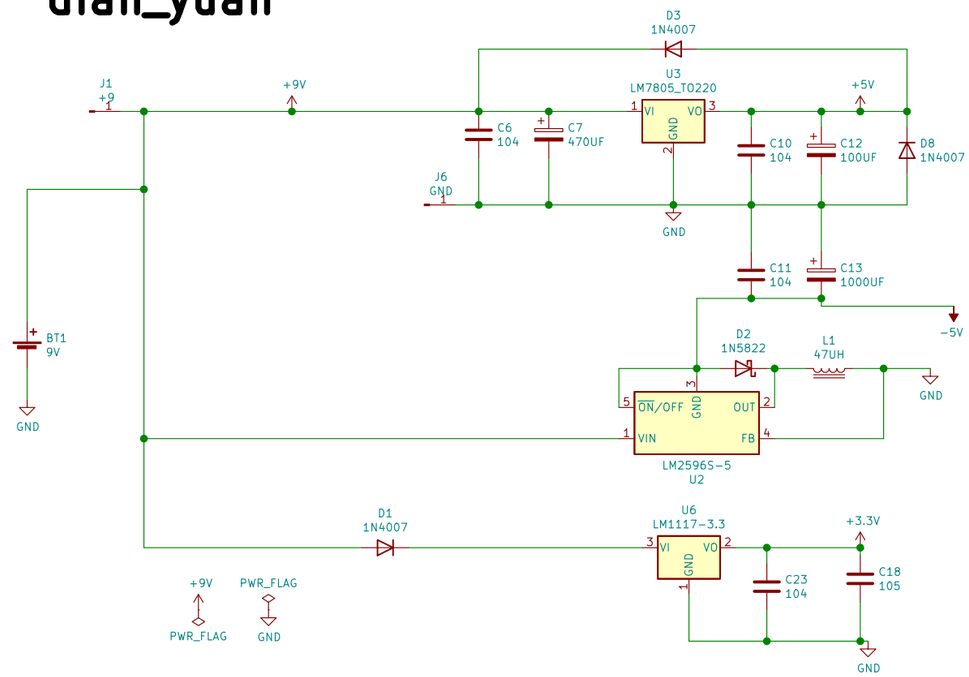

MCU

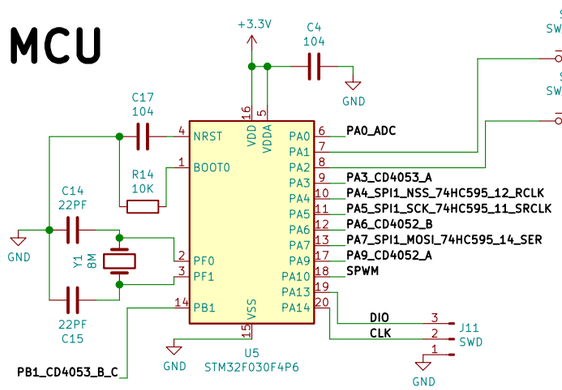

Sheet: /
File: lcr-1.sch

Title: pmsm

Size: A3	Date:	Rev:
KiCad E.D.A. kicad 5.1.8-5.1.8		Id: 1/1