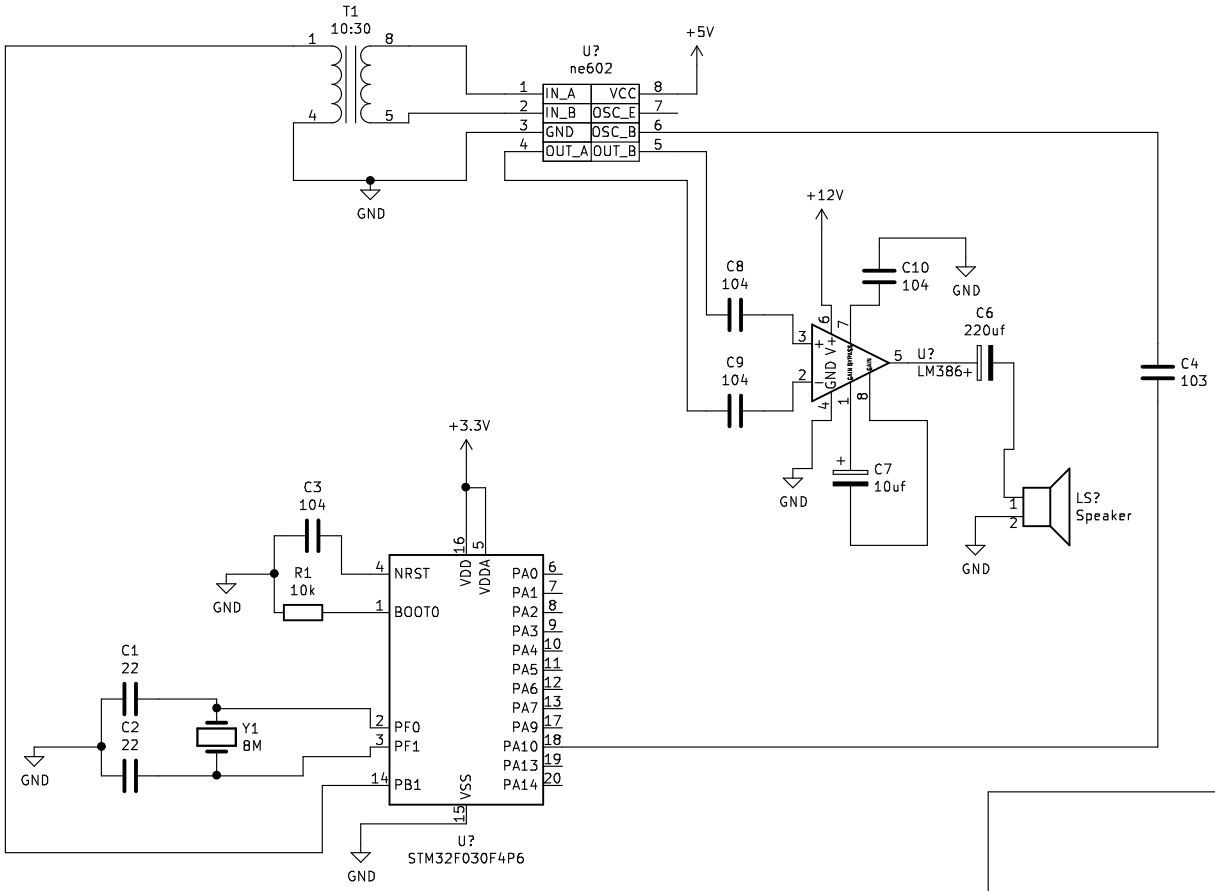

Sheet: /
File: 1.sch

Title:

Size: A4	Date:	Rev:
KiCad E.D.A. kicad 5.1.2-5.1.2		Id: 1/1