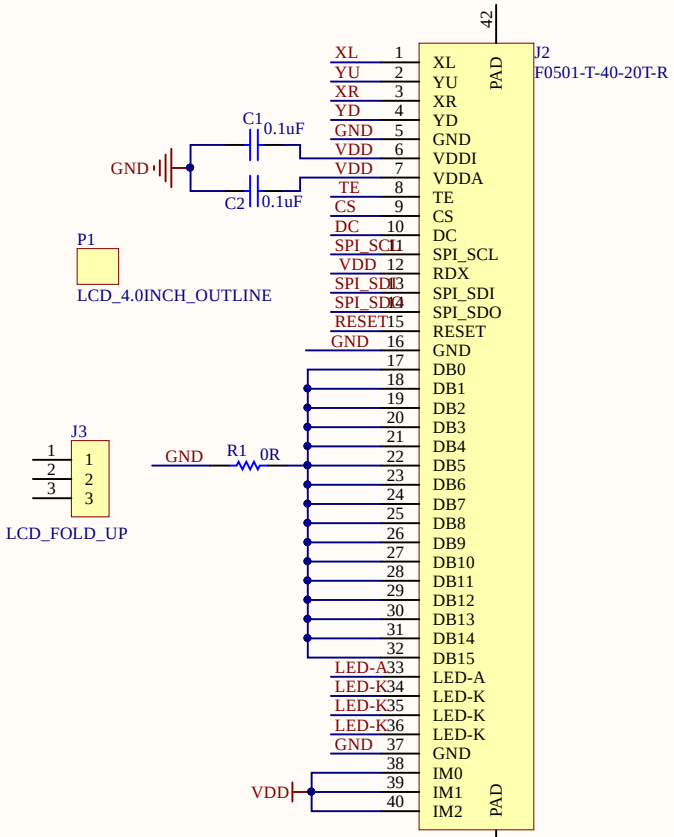

接屏幕排线C481220
0.5mm P数:40 抽屉式 上接

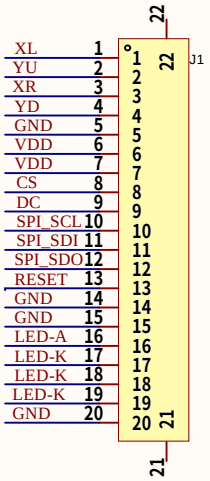

接底板排线C2832251
0.5mm P数:20 翻盖式 下接

SEENGREAT

WEEE

RoHS

ESD

ANDY

					Guangxi Guilin Shengui Science & Technology Co., Ltd
					TITLE: SG-L4.0INCH-U1A-V1.0
					DRAWER: Andy / APPROVER: Andy Li
					REV: V1.0 / DATE: 2023/9/7
Date	Rev	Change descriptions	Changer	Approver	SIZE: A4 / SHEET: 1/1