Additional

Power

MCU

GPL-2.0 or newer

seesee010, see Github for more informations

Sheet: /
File: Temp-Project.kicad_sch

Title: Main Page | Root

Size: A4	Date: 2026-03-08	**Rev: 0.2**
KiCad E.D.A. 9.0.7		Id: 1/4

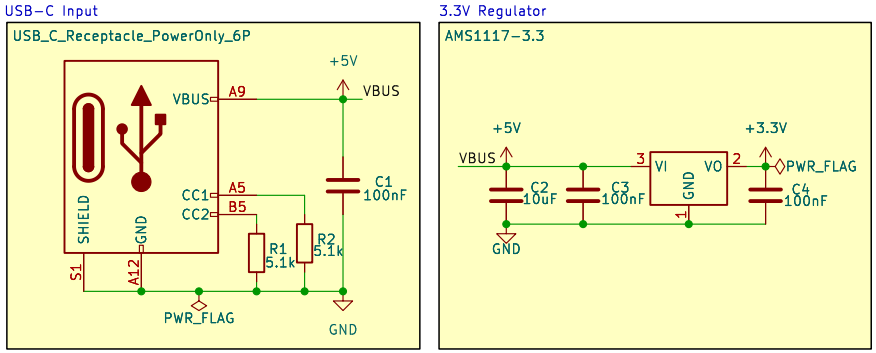

GPL-2.0 or newer

seesee010, see Github for more informations

Sheet: /Power/
File: power-regulation.kicad_sch

Title: Power Managment

Size: A4	Date: 2026-03-08	**Rev: 0.2**
KiCad E.D.A. 9.0.7		Id: 2/4

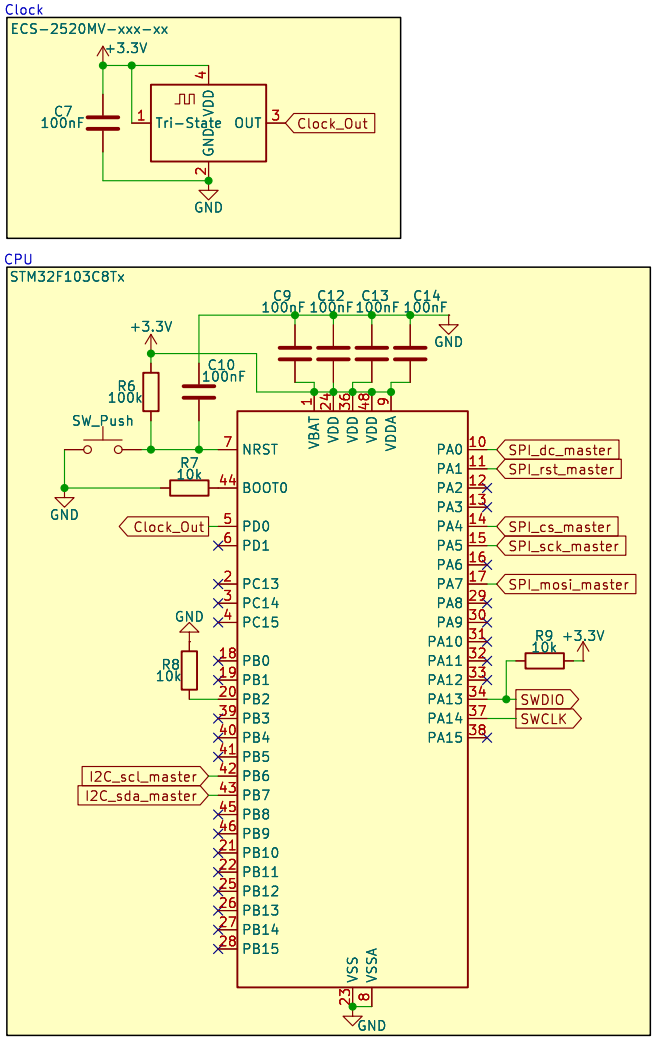

GPL-2.0 or newer

seesee010, see Github for more informations

Sheet: /MCU/
File: mcu.kicad_sch

Title: MCU | Chipset

Size: A4	Date: 2026-03-08	**Rev: 0.2**
KiCad E.D.A. 9.0.7		Id: 3/4

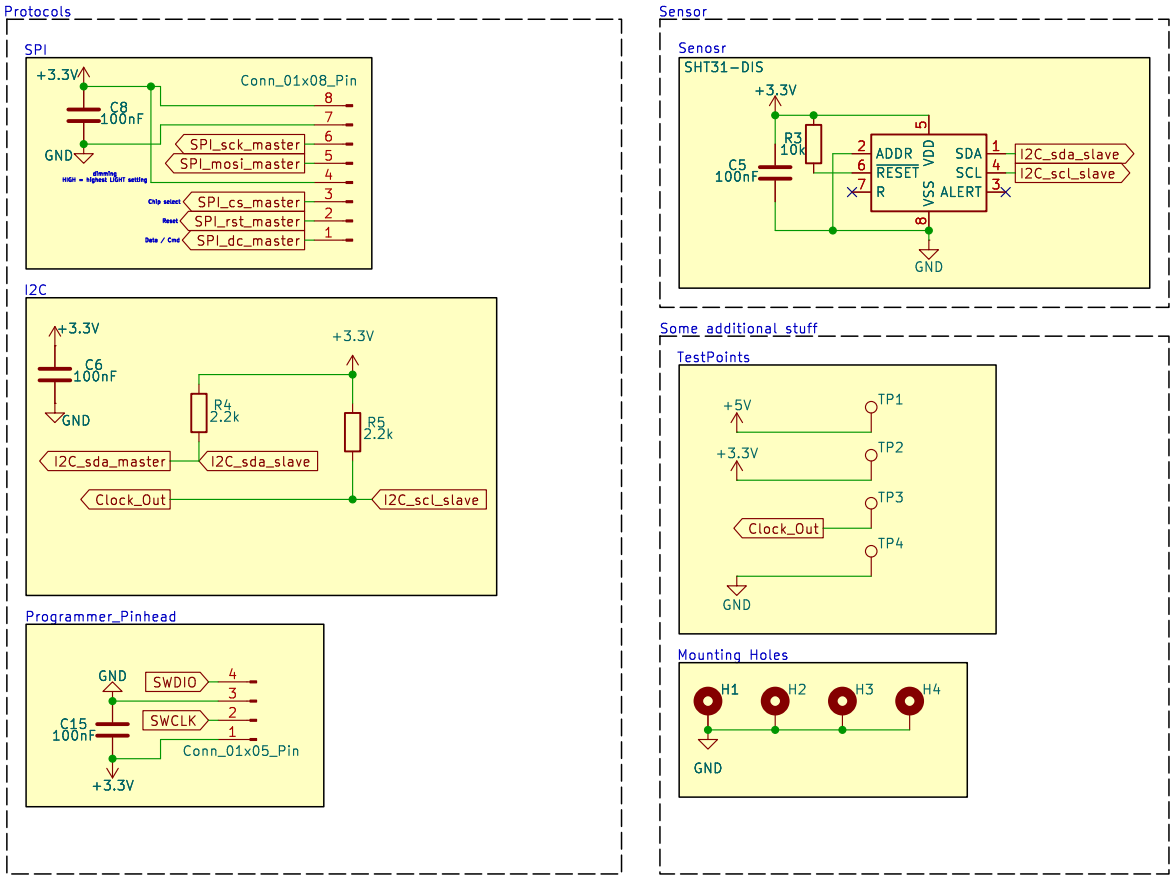

GPL-2.0 or newer

seesee010, see Github for more informations

Sheet: /Additional/
File: communication.kicad_sch

Title: Additional stuff

Size: A4	Date: 2026-03-08	**Rev: 0.2**
KiCad E.D.A. 9.0.7		Id: 4/4