EE568 – Design of Electrical Machines

Project 1: Torque in a Variable Reluctance Machine

Name: Sefer İDACİ
Student Number: 2575421
Date: April 5, 2026

1 Introduction

This report covers the analysis of a single-phase variable reluctance machine (VRM) consisting of a rectangular laminated-steel stator and a D-shaped rotor. As the rotor turns, the air-gap reluctance changes, producing an electromagnetic torque. The work is divided into four parts: analytical modelling, FEA with linear materials, FEA with non-linear materials, and a proposed control strategy for continuous rotation.

2 Q1 – Analytical Modelling

2.1 Machine Geometry and Parameters

The machine is shown in Figure 1. The stator is a closed rectangular frame. A coil is wound around the left leg, and the D-shaped rotor sits in a circular opening on the right side, creating two variable air gaps in series. Table 1 lists the given parameters.

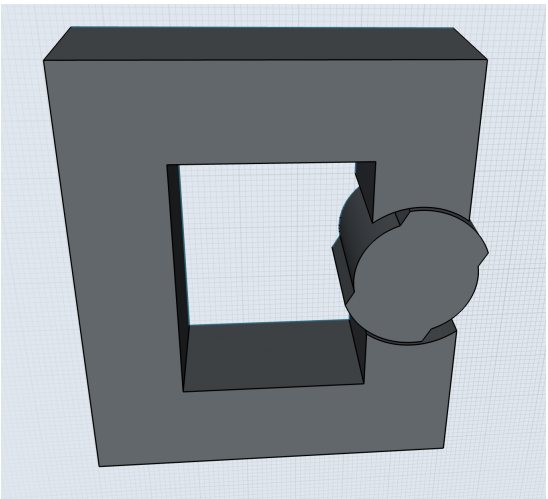

(a) 3-D view of the machine.

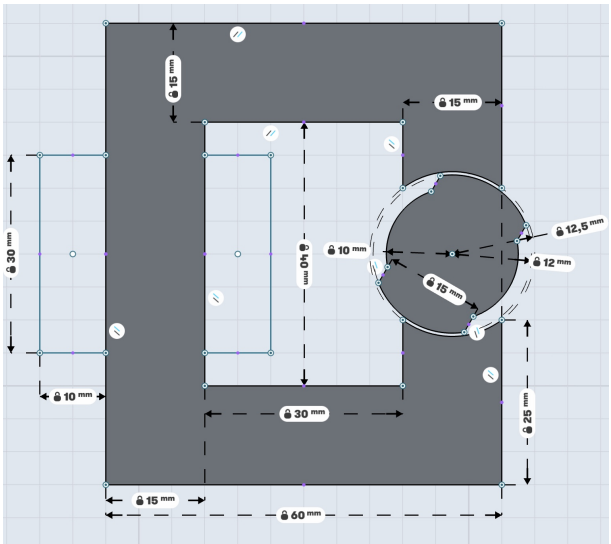

(b) 2-D dimensioned drawing.

Figure 1: Variable reluctance machine geometry.

Table 1: Machine parameters.

Parameter	**Symbol**	**Value**	**Unit**
Number of turns	N	300	–
DC coil current	I	2.5	A
Air-gap clearance (each side)	g	0.5	mm
Core depth	d	25	mm
Core / yoke width	w_c	15	mm
Stator inner window (width)	w_w	30	mm
Stator inner window (height)	h_w	40	mm
Rotor outer radius	R_r	12.5	mm

2.2 Assumptions

To keep the analytical model tractable, the following assumptions are made:

a) The core is **infinitely permeable** ($\mu_r \to \infty$), so only the air-gap reluctance matters.

b) There is **no fringing flux** – the effective flux area equals the geometric core cross-section.

c) The **inductance varies sinusoidally** with twice the mechanical angle, which is a standard approximation for a 2-pole machine.

d) The system is **lossless** – no eddy-current or hysteresis effects.

2.3 Core Geometry

Core cross-sectional area:

$$A_{\text{core}} = w_c \times d = 15 \times 25 = 375\,\text{mm}^2 = 375 \times 10^{-6}\,\text{m}^2 \tag{1}$$

Mean magnetic path length (centre-line of the stator):

$$\begin{aligned} \ell_{\text{core}} &= 2(w_w + w_c) + 2(h_w + w_c) \\ &= 2(30 + 15) + 2(40 + 15) = 200\,\text{mm} = 0.2\,\text{m} \end{aligned} \tag{2}$$

With the infinite-permeability assumption the core reluctance is zero, so ℓ_{core} plays no role in the inductance calculation (it becomes relevant when finite permeability or saturation is included in Section 2.7).

Air-gap lengths. The flux crosses two gaps in series:

- *Aligned* ($\theta = 0°$): both gaps equal the design clearance:

$$\ell_{g,\min} = 2g = 2 \times 0.5 = 1\,\text{mm}$$

- *Unaligned* ($\theta = 90°$): the rotor flat faces the pole tips, increasing each gap to 2.5 mm:

$$\ell_{g,\max} = 2 \times 2.5 = 5\,\text{mm}$$

2.4 Maximum and Minimum Inductance

With an infinitely permeable core the reluctance is purely due to the air gap:

$$\mathcal{R} = \frac{\ell_g}{\mu_0 A_{\text{core}}} \qquad \Rightarrow \qquad L = \frac{N^2}{\mathcal{R}} = \frac{N^2 \mu_0 A_{\text{core}}}{\ell_g} \tag{3}$$

At the aligned position ($\ell_g = \ell_{g,\min} = 1\,\text{mm}$):

$$\mathcal{R}_{\min} = \frac{1 \times 10^{-3}}{4\pi \times 10^{-7} \times 375 \times 10^{-6}} = 2.122 \times 10^6\ \text{A/Wb} \tag{4}$$

$$L_{\max} = \frac{300^2}{2.122 \times 10^6} = 42.41\,\text{mH} \tag{5}$$

At the unaligned position ($\ell_g = \ell_{g,\max} = 5\,\text{mm}$):

$$\mathcal{R}_{\max} = \frac{5 \times 10^{-3}}{4\pi \times 10^{-7} \times 375 \times 10^{-6}} = 10.61 \times 10^6\ \text{A/Wb} \tag{6}$$

$$L_{\min} = \frac{300^2}{10.61 \times 10^6} = 8.48\,\text{mH} \tag{7}$$

The results are summarised in Table 2.

Table 2: Reluctance and inductance at the two extreme positions.

Position	ℓ_g (mm)	$\mathcal{R}$ (MA/Wb)	L (mH)
Aligned ($\theta = 0°$)	1.0	2.122	42.41
Unaligned ($\theta = 90°$)	5.0	10.61	8.48

2.5 Inductance Variation $L(\theta)$

Assuming a sinusoidal variation between $L_{\min}$ and $L_{\max}$:

$$\boxed{L(\theta) = \frac{L_{\max} + L_{\min}}{2} + \frac{L_{\max} - L_{\min}}{2} \cos(2\theta)} \tag{8}$$

This satisfies $L(0°) = L_{\max}$ and $L(90°) = L_{\min}$. The factor 2θ reflects the 2-pole symmetry: one full inductance cycle every 180° of mechanical rotation.

2.6 Torque $T(\theta)$

For constant current excitation the torque is the co-energy derivative:

$$T(\theta) = \frac{1}{2} i^2 \frac{dL}{d\theta} \tag{9}$$

Differentiating Equation (8):

$$\frac{dL}{d\theta} = -(L_{\max} - L_{\min}) \sin(2\theta) \tag{10}$$

So the torque is:

$$\boxed{T(\theta) = -\frac{i^2}{2}(L_{\max} - L_{\min})\sin(2\theta)} \tag{11}$$

The peak torque amplitude at $I = 2.5\,\mathrm{A}$:

$$\begin{aligned} T_{\text{peak}} &= \frac{I^2}{2}(L_{\max} - L_{\min}) \\ &= \frac{(2.5)^2}{2} \times (42.41 - 8.48) \times 10^{-3} = 106.0\,\mathrm{mN \cdot m} \end{aligned} \tag{12}$$

The average torque under constant DC is zero (positive and negative halves cancel). The inductance and torque plots are shown in Figure 2.

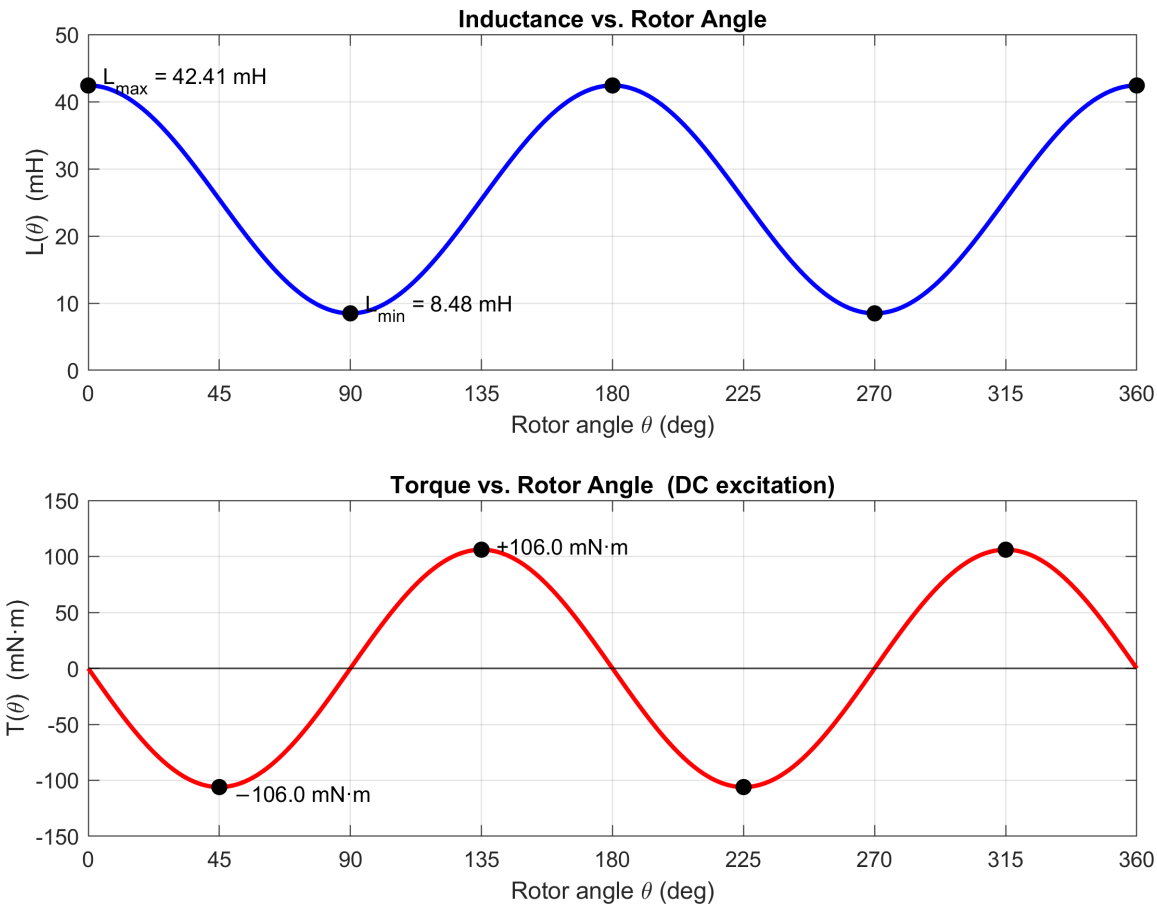

Figure 2: Inductance (top) and torque (bottom) vs. rotor angle, from the analytical model. L ranges from $8.48\,\mathrm{mH}$ to $42.41\,\mathrm{mH}$; peak torque is $\pm 106\,\mathrm{mN \cdot m}$.

2.7 Improving the Model

The main limitations of the model above and how to address them:

1. **Finite core permeability.** Including the core reluctance $\mathcal{R}_{\text{core}} = \ell_{\text{core}}/(\mu_0 \mu_r A_c)$ in series with the air-gap reluctance reduces $L_{\max}$ and changes the $L_{\max}/L_{\min}$ ratio. For silicon steel ($\mu_r \approx 5000$) this effect is on the order of a few percent.

2. **Magnetic saturation.** At high currents μ_r drops and L becomes a function of both θ and i. The torque must then be computed from the full co-energy integral $T = \partial W'(\theta, i)/\partial\theta$.

3. **Fringing flux.** The effective flux area at the gap edges is larger than A_{core}. A simple correction replaces w_c and d with $(w_c+\ell_g)$ and $(d+\ell_g)$, which increases both $L_{\max}$ and $L_{\min}$ (more so at the larger gap). A 2-D FEA captures this automatically.

4. **Non-sinusoidal profile.** The actual inductance variation follows the change in overlapping pole-arc area with angle and is closer to a trapezoidal shape than a sinusoid. This can be captured analytically by integrating the air-gap permeance over the overlap area as a function of θ.

3 Q2 – FEA Modelling (Linear Materials)

The 2D FEA simulation with linear material properties is performed in FEMM. Results will be added to this section.

3.1 Model Setup

- Software: FEMM 4.2 (2D magneto-static).
- Core: *[material, linear $\mu_r = \ldots$].*
- Positions: 0°, 45°, 90°.

3.2 Flux Density Plots

[Insert flux-density vector plots for three positions.]

3.3 Inductance and Stored Energy

[Insert results table for $\theta = 0°$, 45°, 90°.]

3.4 Torque vs. Angle – Comparison with Analytical Model

[Insert torque vs. angle plot comparing FEA (≥ 10 positions) with Equation (11).]

4 Q3 – FEA Modelling (Non-Linear Materials)

Same as Q2 but with a non-linear (saturating) B–H curve.

4.1 Material Properties

[Describe the B–H curve; include the plot in the Appendix.]

4.2 Flux Density Plots

[Insert plots for three positions.]

4.3 Inductance and Stored Energy

[Insert results table.]

4.4 Torque vs. Angle

[Insert torque vs. angle plot.]

4.5 Discussion

[Compare linear vs. non-linear FEA and analytical model. Discuss saturation, fringing, and the validity of the sinusoidal assumption.]

5 Q4 – Control Method for Continuous Rotation

5.1 The Problem

With constant DC current the torque averages to zero over a full rotation. For net unidirectional motion the current must be switched on only when it produces positive torque.

5.2 Switched Excitation

From Equation (11), torque is positive when $\sin(2\theta) < 0$, i.e. when $\theta \in (90°, 180°) \cup (270°, 360°)$. The strategy is simple: **energise the coil as the rotor moves from unaligned toward aligned; switch off before the aligned position to avoid negative torque on the return stroke.**

5.3 Average Torque

With ideal on/off switching (on at 90°, off at 180°):

$$T_{\text{avg}} = \frac{1}{\pi}\int_{90°}^{180°} \frac{I^2}{2}(L_{\max} - L_{\min})(-\sin 2\theta)\, d\theta = \frac{T_{\text{peak}}}{\pi} \approx \frac{106.0}{\pi} \approx 33.8\,\text{mN}\cdot\text{m} \tag{13}$$

This is about 31.8% of the peak torque.

5.4 Practical Considerations

- A position sensor (Hall effect or encoder) is needed to synchronise switching with rotor angle.
- The turn-on angle should be slightly before 90° and the turn-off angle slightly before 180° to compensate for the finite current rise and fall times.
- A PWM current controller keeps the current constant during the on-interval for repeatable torque.

6 Conclusion

The analytical model predicts an inductance variation from $L_{\min} = 8.48\,\mathrm{mH}$ to $L_{\max} = 42.41\,\mathrm{mH}$, with a peak torque of $106\,\mathrm{mN \cdot m}$ under $2.5\,\mathrm{A}$ DC. Constant DC excitation produces zero average torque; switching the current on during the unaligned-to-aligned transition raises the average to approximately $33.8\,\mathrm{mN \cdot m}$. FEA results (linear and non-linear) will be added to refine these estimates and quantify the effects of fringing and saturation.

A MATLAB Code

```
%% EE568 HW1 - Variable Reluctance Machine: Analytical Model
%  Q1a: Inductance variation as a function of rotor angle
%  Q1b: Torque under constant DC excitation
%
%  Assumptions:
%   - Core is infinitely permeable (mu_r -> inf), so only air-gap reluctance matters
%   - Sinusoidal inductance variation with electrical period = pi (2 poles)
%   - Uniform flux distribution across core cross-section (no fringing)
%   - Air-gap effective area equals core cross-section area at all positions
%
%  Machine geometry (from dimensions figure):
%   - Stator outer: 60 mm wide x 70 mm tall
%   - Core yoke thickness: 15 mm on all sides
%   - Inner window: 30 mm x 40 mm
%   - Core depth (into page): 25 mm
%   - Rotor: D-shaped, outer radius = 12.5 mm, flat at 12 mm from center
%   - Air gap clearance at aligned position: g = 0.5 mm each side

```

```
clear; clc; close all;

%% ==========================================================
%  1. MACHINE PARAMETERS
%% ==========================================================

% Electrical parameters
N   = 300;              % Number of turns
I   = 2.5;              % Coil current [A] (DC)
mu0 = 4*pi*1e-7;        % Permeability of free space [H/m]

% Core geometry
depth       = 25e-3;    % Core depth into page [m]
core_w      = 15e-3;    % Core (yoke/leg) width [m]
A_core      = core_w * depth;    % Core cross-sectional area [m^2]
% A_core = 15e-3 * 25e-3 = 375e-6 m^2

% Mean core path length (center-line of magnetic circuit)
% Score = 2*(inner_width + yoke) + 2*(inner_height + yoke)
%       = 2*(30 + 15) + 2*(40 + 15) = 90 + 110 = 200 mm
l_core = 200e-3;        % Mean core path length [m] (for reference; unused with inf. mu_r)

% Air-gap lengths (total = two gaps in series: flux crosses gap twice)
g_each   = 0.5e-3;              % Air-gap clearance at each pole face [m]
l_gap_min = 2 * g_each;         % Total gap at ALIGNED position (theta = 0 deg) [m]
%                                 = 2 * 0.5 mm = 1 mm

% At UNALIGNED position (theta = 90 deg), the D-rotor flat faces the pole:
%   Each effective gap = 2.5 mm  ->  total = 2 * 2.5 mm = 5 mm
l_gap_max = 2 * 2.5e-3;    % Total gap at UNALIGNED [m] = 5 mm

fprintf('=== Geometry ===\n');
fprintf('Core cross-section area : A_core  = %.1f mm^2\n', A_core*1e6);
fprintf('Mean core path length   : l_core  = %.0f mm\n', l_core*1e3);
fprintf('Min total air-gap length: l_gap_min = %.1f mm (aligned)\n', l_gap_min*1e3);
fprintf('Max total air-gap length: l_gap_max = %.1f mm (unaligned)\n\n', l_gap_max*1e3);

%% ==========================================================
%  2. RELUCTANCE AND INDUCTANCE (infinite core permeability)
%% ==========================================================
% Reluctance: R = l_gap / (mu0 * A_core)   [A-turns/Wb]
```

```
R_min = l_gap_min / (mu0 * A_core);   % Minimum reluctance (aligned)
R_max = l_gap_max / (mu0 * A_core);   % Maximum reluctance (unaligned)

% Inductance: L = N^2 / R   [H]
L_max = N^2 / R_min;   % Maximum inductance (aligned,   theta = 0 deg)
L_min = N^2 / R_max;   % Minimum inductance (unaligned, theta = 90 deg)

fprintf('=== Reluctance & Inductance ===\n');
fprintf('R_min (aligned)    = %.4e A/Wb\n', R_min);
fprintf('R_max (unaligned)  = %.4e A/Wb\n', R_max);
fprintf('L_max (aligned)    = %.4f mH\n', L_max*1e3);
fprintf('L_min (unaligned)  = %.4f mH\n\n', L_min*1e3);

%% ==========================================================
%  3. INDUCTANCE VARIATION: L(theta)
%% ==========================================================
% Assuming sinusoidal variation (one full electrical cycle per 180 deg):
%
%   L(theta) = (L_max + L_min)/2  +  (L_max - L_min)/2 * cos(2*theta)
%
% theta = 0   -> L = L_max  (aligned, minimum reluctance)
% theta = 90  -> L = L_min  (unaligned, maximum reluctance)

theta_deg = 0 : 0.5 : 360;          % Rotor angle [degrees], full rotation
theta_rad = deg2rad(theta_deg);

L_avg  = (L_max + L_min) / 2;
L_amp  = (L_max - L_min) / 2;

L_theta = L_avg + L_amp * cos(2 * theta_rad);   % [H]

%% ==========================================================
%  4. TORQUE: T(theta)
%% ==========================================================
% From energy/co-energy principle (constant current excitation):
%
%   T(theta) = (1/2) * i^2 * dL/dtheta
%
%   dL/dtheta = -(L_max - L_min) * sin(2*theta)
%
%   T(theta) = -(i^2 / 2) * (L_max - L_min) * sin(2*theta)
%
% Positive torque -> rotation in increasing theta direction

```

```
dL_dtheta = -(L_max - L_min) * sin(2 * theta_rad);   % [H/rad]
T_theta   = 0.5 * I^2 * dL_dtheta;                   % [N*m]

T_peak = 0.5 * I^2 * (L_max - L_min);   % Peak torque amplitude

fprintf('=== Torque ===\n');
fprintf('Peak torque amplitude: T_peak = %.4f mN*m\n\n', T_peak*1e3
    );

%% ==========================================================
%  5. PLOTS
%% ==========================================================

% Peak locations for inductance
theta_Lmax = [0 180 360];
theta_Lmin = [90 270];

% Peak locations for torque  (T positive peaks at 135, 315;
    negative at 45, 225)
theta_Tpos = [135 315];
theta_Tneg = [45 225];
L_at_Lmax  = L_avg + L_amp;   % = L_max
L_at_Lmin  = L_avg - L_amp;   % = L_min
T_at_pos   =  T_peak;
T_at_neg   = -T_peak;

fig1 = figure('Name','Analytical Model', ...
              'Units','centimeters','Position',[2 2 22 16]);

% --- Subplot 1: Inductance ---
ax1 = subplot(2,1,1);
plot(theta_deg, L_theta*1e3, 'b-', 'LineWidth', 2);
hold on;
plot(theta_Lmax, L_at_Lmax*1e3*ones(size(theta_Lmax)), 'ko', ...
     'MarkerFaceColor','k', 'MarkerSize', 7);
plot(theta_Lmin, L_at_Lmin*1e3*ones(size(theta_Lmin)), 'ko', ...
     'MarkerFaceColor','k', 'MarkerSize', 7);
% Annotate peak values
text(5,  L_at_Lmax*1e3 + 0.8, sprintf('L_{max} = %.2f mH', L_max*1
    e3), 'FontSize', 10);
text(95, L_at_Lmin*1e3 + 0.8, sprintf('L_{min} = %.2f mH', L_min*1
    e3), 'FontSize', 10);
xlabel('Rotor angle \theta (deg)', 'FontSize', 11);
ylabel('L(\theta)  (mH)',          'FontSize', 11);
title('Inductance vs. Rotor Angle', 'FontSize', 12);
grid on;  xlim([0 360]);  xticks(0:45:360);
set(ax1, 'FontSize', 10);

% --- Subplot 2: Torque ---
ax2 = subplot(2,1,2);
plot(theta_deg, T_theta*1e3, 'r-', 'LineWidth', 2);
```

```
hold on;
yline(0, 'k-', 'LineWidth', 0.8);
plot(theta_Tpos, T_at_pos*1e3*ones(size(theta_Tpos)), 'ko', ...
     'MarkerFaceColor','k', 'MarkerSize', 7);
plot(theta_Tneg, T_at_neg*1e3*ones(size(theta_Tneg)), 'ko', ...
     'MarkerFaceColor','k', 'MarkerSize', 7);
% Annotate peak values
text(140,  T_at_pos*1e3 + 3, sprintf('+%.1f mN*m', T_peak*1e3), 'FontSize', 10);
text(50,   T_at_neg*1e3 - 6, sprintf('-%.1f mN*m', T_peak*1e3), 'FontSize', 10);
xlabel('Rotor angle \theta (deg)', 'FontSize', 11);
ylabel('T(\theta)  (mN*m)',        'FontSize', 11);
title('Torque vs. Rotor Angle  (DC excitation)', 'FontSize', 12);
grid on;  xlim([0 360]);  xticks(0:45:360);
set(ax2, 'FontSize', 10);

exportgraphics(fig1, 'analytical_LT_plots.png', 'Resolution', 300);
fprintf('Figure saved as analytical_LT_plots.png\n');

%% ==========================================================
%  6. SUMMARY TABLE
%% ==========================================================
fprintf('\n=== Summary ===\n');
fprintf('L_max  = %.4f mH  (at theta = 0, 180, 360 deg)\n', L_max*1e3);
fprintf('L_min  = %.4f mH  (at theta = 90, 270 deg)\n', L_min*1e3);
fprintf('L_avg  = %.4f mH\n', L_avg*1e3);
fprintf('L_amp  = %.4f mH  (half peak-to-peak)\n', L_amp*1e3);
fprintf('T_peak = %.4f mN*m (at theta = 45, 135, 225, 315 deg)\n', T_peak*1e3);
fprintf('Average torque over full rotation = %.6f N*m (zero for DC)\n', mean(T_theta));
```

Listing 1: Analytical inductance and torque script (`analytical_model.m`).

B Material Properties

[Insert B–H curve data for the steel used in Q2/Q3.]