Middle East Technical University

Department of Electrical and Electronics Engineering

EE568 – Design of Electrical Machines

Project 1: Torque in a Variable Reluctance Machine

Name: Sefer İDACI

Student Number: 2575421

Date: April 17, 2026

Submitted to: EE568 Course Staff

1 Introduction

This report covers the analysis of a single-phase variable reluctance machine (VRM) consisting of a rectangular laminated-steel stator and a D-shaped rotor. As the rotor turns, the air-gap reluctance changes, producing an electromagnetic torque. The work is divided into four parts: analytical modelling, FEA with linear materials, FEA with non-linear materials, and a proposed control strategy for continuous rotation.

2 Q1 – Analytical Modelling

2.1 Machine Geometry and Parameters

The machine is shown in Figure 1. The stator is a closed rectangular frame. A coil is wound around the left leg, and the D-shaped rotor sits in a circular opening on the right side, creating two variable air gaps in series. Table 1 lists the given parameters.

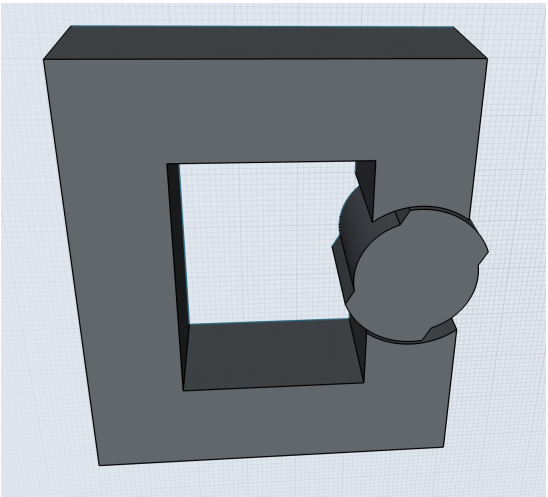

(a) 3-D view of the machine.

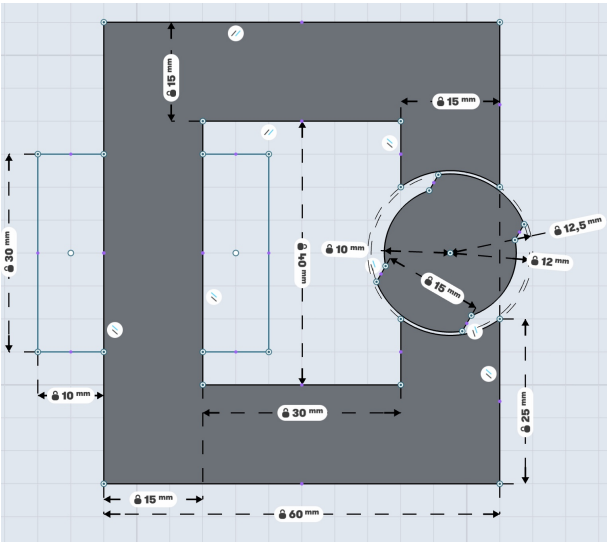

(b) 2-D dimensioned drawing.

Figure 1: Variable reluctance machine geometry.

Table 1: Machine parameters.

Parameter	**Symbol**	**Value**	**Unit**
Number of turns	N	300	–
DC coil current	I	2.5	A
Air-gap clearance (each side)	g	0.5	mm
Core depth	d	25	mm
Core / yoke width	w_c	15	mm
Stator inner window (width)	w_w	30	mm
Stator inner window (height)	h_w	40	mm
Rotor outer radius	R_r	12.5	mm

2.2 Assumptions

To keep the analytical model tractable, the following assumptions are made:

a) The core is **infinitely permeable** ($\mu_r \to \infty$), so only the air-gap reluctance matters.

b) There is **no fringing flux** – the effective flux area equals the geometric core cross-section.

c) The **inductance varies sinusoidally** with twice the mechanical angle, which is a standard approximation for a 2-pole machine.

d) The system is **lossless** – no eddy-current or hysteresis effects.

2.3 Core Geometry

Core cross-sectional area:

$$A_{\text{core}} = w_c \times d = 15 \times 25 = 375\,\text{mm}^2 = 375 \times 10^{-6}\,\text{m}^2 \tag{1}$$

Mean magnetic path length (centre-line of the stator):

$$\begin{aligned} \ell_{\text{core}} &= 2(w_w + w_c) + 2(h_w + w_c) \\ &= 2(30 + 15) + 2(40 + 15) = 200\,\text{mm} = 0.2\,\text{m} \end{aligned} \tag{2}$$

With the infinite-permeability assumption the core reluctance is zero, so ℓ_{core} plays no role in the inductance calculation (it becomes relevant when finite permeability or saturation is included in Section 2.7).

Air-gap lengths. The flux crosses two gaps in series:

- *Aligned* ($\theta = 0°$): both gaps equal the design clearance:

$$\ell_{g,\min} = 2g = 2 \times 0.5 = 1\,\text{mm}$$

- *Unaligned* ($\theta = 90°$): the rotor flat faces the pole tips, increasing each gap to 2.5 mm:

$$\ell_{g,\max} = 2 \times 2.5 = 5\,\text{mm}$$

2.4 Maximum and Minimum Inductance

With an infinitely permeable core the reluctance is purely due to the air gap:

$$\mathcal{R} = \frac{\ell_g}{\mu_0 A_{\text{core}}} \qquad \Rightarrow \qquad L = \frac{N^2}{\mathcal{R}} = \frac{N^2 \mu_0 A_{\text{core}}}{\ell_g} \tag{3}$$

At the aligned position ($\ell_g = \ell_{g,\min} = 1\,\text{mm}$):

$$\mathcal{R}_{\min} = \frac{1 \times 10^{-3}}{4\pi \times 10^{-7} \times 375 \times 10^{-6}} = 2.122 \times 10^6\ \text{A/Wb} \tag{4}$$

$$L_{\max} = \frac{300^2}{2.122 \times 10^6} = 42.41\,\text{mH} \tag{5}$$

At the unaligned position ($\ell_g = \ell_{g,\max} = 5\,\text{mm}$):

$$\mathcal{R}_{\max} = \frac{5 \times 10^{-3}}{4\pi \times 10^{-7} \times 375 \times 10^{-6}} = 10.61 \times 10^6\ \text{A/Wb} \tag{6}$$

$$L_{\min} = \frac{300^2}{10.61 \times 10^6} = 8.48\,\text{mH} \tag{7}$$

The results are summarised in Table 2.

Table 2: Reluctance and inductance at the two extreme positions.

Position	ℓ_g (mm)	$\mathcal{R}$ (MA/Wb)	L (mH)
Aligned ($\theta = 0°$)	1.0	2.122	42.41
Unaligned ($\theta = 90°$)	5.0	10.61	8.48

2.5 Inductance Variation $L(\theta)$

Assuming a sinusoidal variation between $L_{\min}$ and $L_{\max}$:

$$\boxed{L(\theta) = \frac{L_{\max} + L_{\min}}{2} + \frac{L_{\max} - L_{\min}}{2} \cos(2\theta)} \tag{8}$$

This satisfies $L(0°) = L_{\max}$ and $L(90°) = L_{\min}$. The factor 2θ reflects the 2-pole symmetry: one full inductance cycle every 180° of mechanical rotation.

2.6 Torque $T(\theta)$

For constant current excitation the torque is the co-energy derivative:

$$T(\theta) = \frac{1}{2} i^2 \frac{dL}{d\theta} \tag{9}$$

Differentiating Equation (8):

$$\frac{dL}{d\theta} = -(L_{\max} - L_{\min}) \sin(2\theta) \tag{10}$$

So the torque is:

$$\boxed{T(\theta) = -\frac{i^2}{2}(L_{\max} - L_{\min})\sin(2\theta)} \tag{11}$$

The peak torque amplitude at $I = 2.5\,\mathrm{A}$:

$$\begin{aligned} T_{\text{peak}} &= \frac{I^2}{2}(L_{\max} - L_{\min}) \\ &= \frac{(2.5)^2}{2} \times (42.41 - 8.48) \times 10^{-3} = 106.0\,\mathrm{mN \cdot m} \end{aligned} \tag{12}$$

The average torque under constant DC is zero (positive and negative halves cancel). The inductance and torque plots are shown in Figure 2.

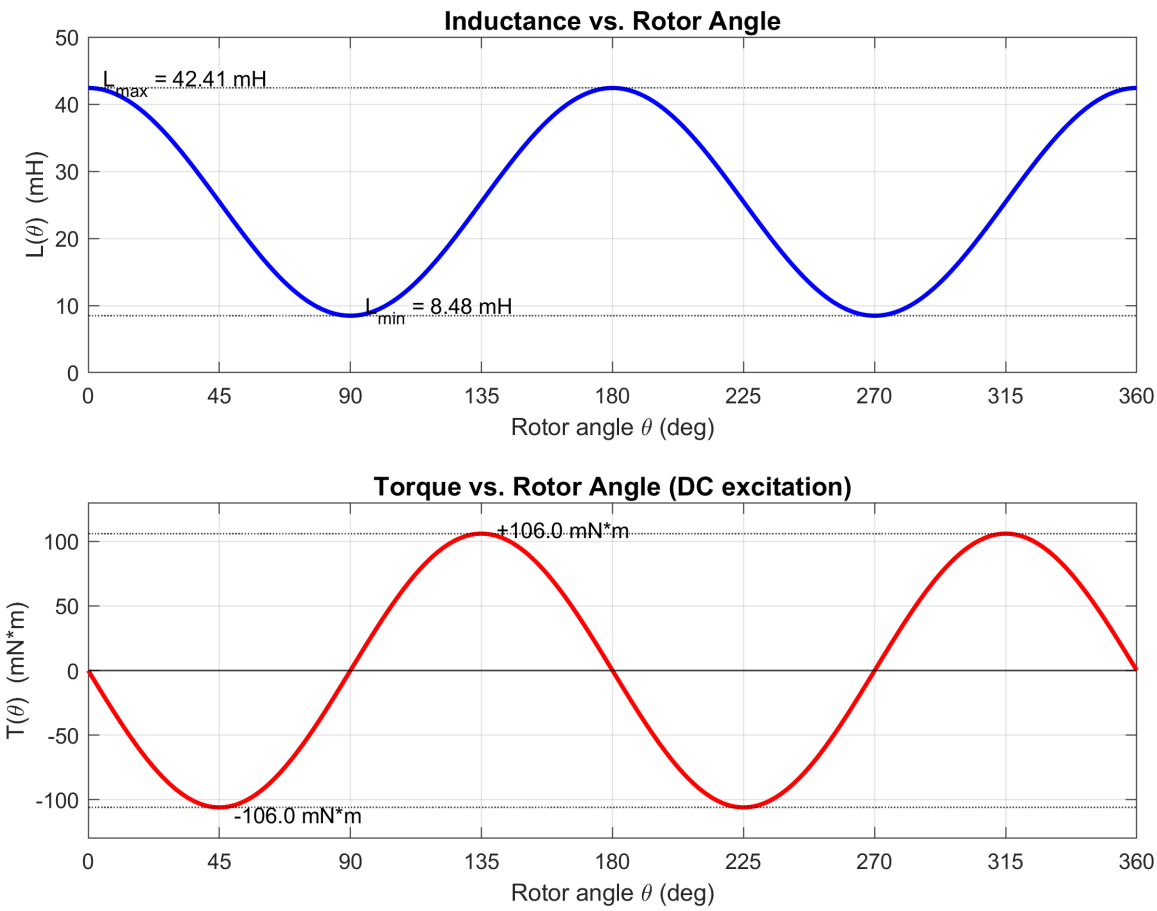

Figure 2: Inductance (top) and torque (bottom) vs. rotor angle, from the analytical model. L ranges from $8.48\,\mathrm{mH}$ to $42.41\,\mathrm{mH}$; peak torque is $\pm 106\,\mathrm{mN \cdot m}$.

2.7 Improving the Model

The main limitations of the model above and how to address them:

1. **Finite core permeability.** Including the core reluctance $\mathcal{R}_{\text{core}} = \ell_{\text{core}}/(\mu_0 \mu_r A_c)$ in series with the air-gap reluctance reduces $L_{\max}$ and changes the $L_{\max}/L_{\min}$ ratio.

2. **Magnetic saturation.** At high currents μ_r drops and L becomes a function of both θ and i. The torque must then be computed from the full co-energy integral $T = \partial W'(\theta, i)/\partial\theta$.

3. **Fringing flux.** The effective flux area at the gap edges is larger than A_{core}. A simple correction replaces w_c and d with $(w_c + \ell_g)$ and $(d + \ell_g)$, which increases both $L_{\max}$ and $L_{\min}$ (more so at the larger gap).

4. **Non-sinusoidal profile.** The actual inductance variation follows the change in overlapping pole-arc area with angle and is closer to a trapezoidal shape than a sinusoid.

3 Q2 – FEA Modelling (Linear Materials)

3.1 Model Setup

The machine was modelled in ANSYS Maxwell 2D (Student Edition 2025 R2) using a Magnetostatic solver. The stator was drawn as a 60×70 mm rectangle with the 30×40 mm window and 13 mm bore subtracted. The D-shaped rotor (pole radius 12.5 mm, notch radius 12 mm) was placed at the bore centre. Two 10×30 mm coil cross-sections were added on the left leg.

- **Excitation:** Winding of 300 turns, $I = 2.5$ A DC. Coil terminals added with opposite polarities.
- **Boundary:** Large surrounding rectangular region with magnetic potential set as zero.
- **Mesh:** 0.25 mm maximum element in the air gap; 1 mm on the core. 15 adaptive passes, 0.5% energy error criterion.
- **Material:** Linear iron with constant relative permeability $\mu_r = 4000$.
- **Sweep:** Rotor angle from 0° to 360° in 5° steps; inductance and torque recorded at each step.

3.2 Flux Density Plots

Figures 3–5 show the flux-density magnitude distribution from the linear FEA at the three key rotor positions.

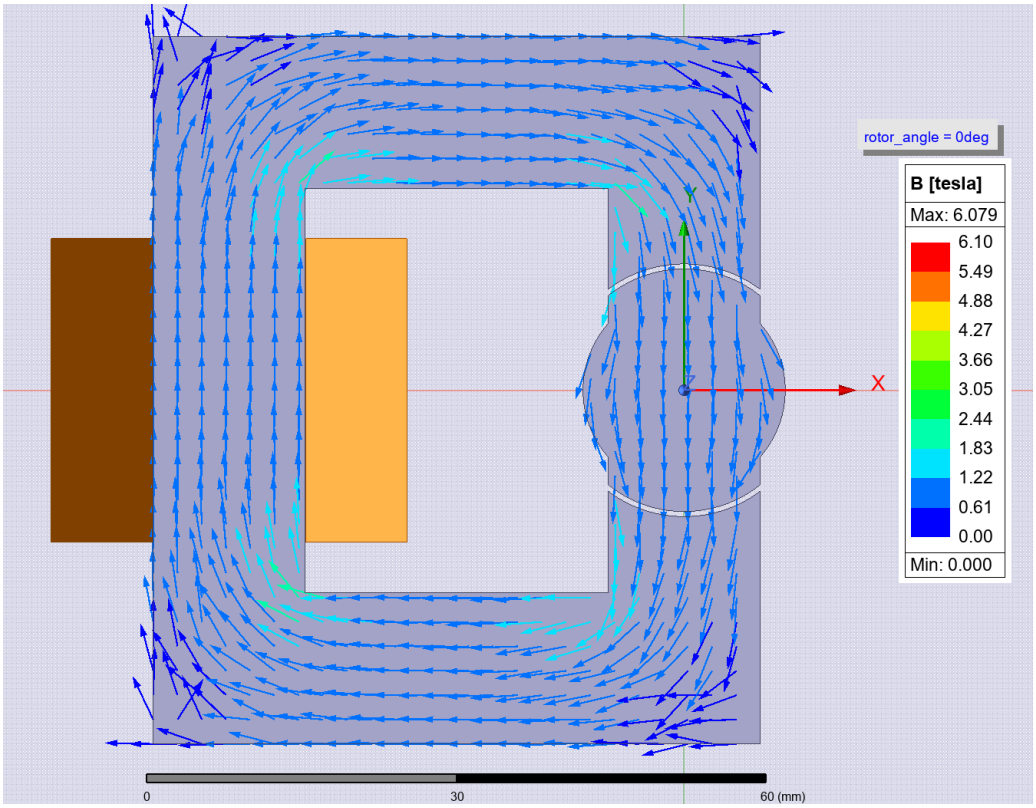

Figure 3: Flux density $|\mathbf{B}|$ at $\theta = 0°$ (aligned). The gap is minimal and the flux is concentrated uniformly across the pole face.

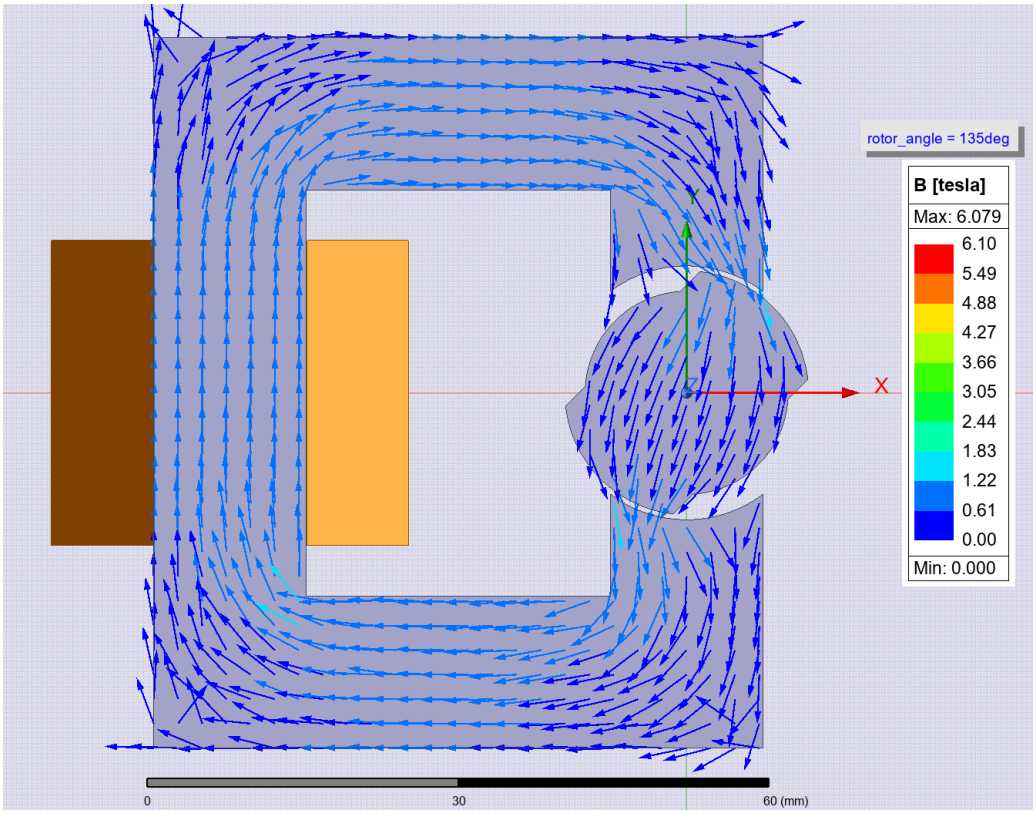

Figure 4: Flux density $|\mathbf{B}|$ at $\theta = 45°$ (mid-stroke). One edge of the rotor pole begins to leave the stator pole face; fringing is visible at the partial-overlap corners.

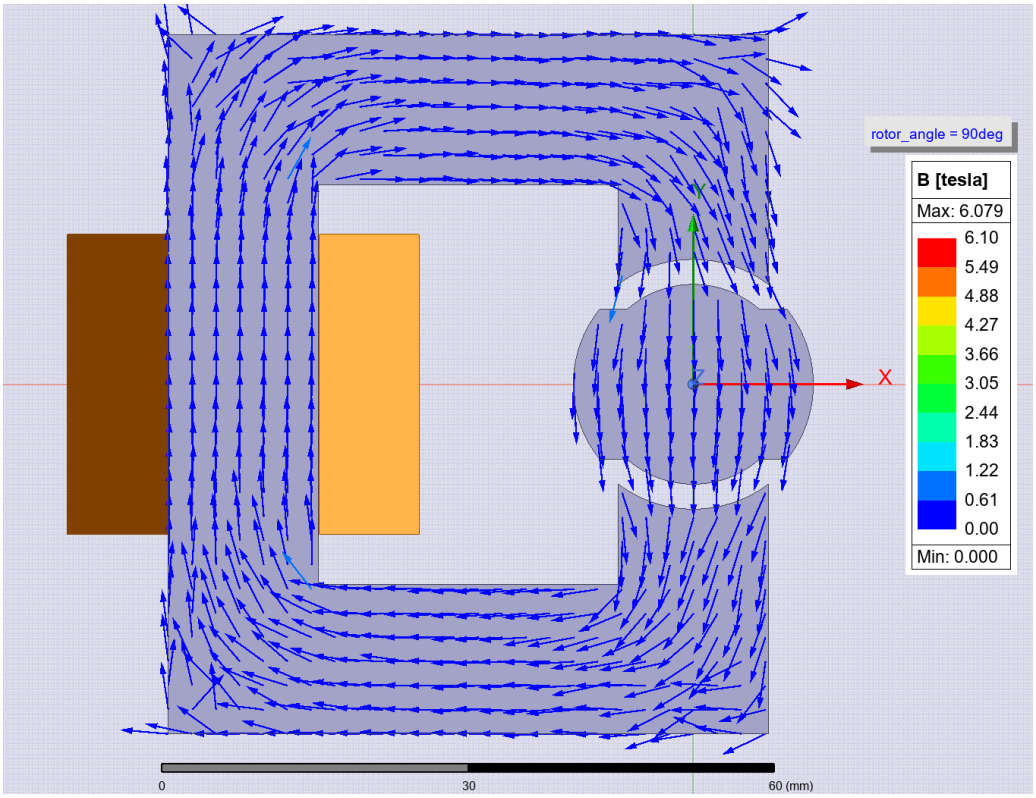

Figure 5: Flux density $|\mathbf{B}|$ at $\theta = 90°$ (unaligned). The rotor flat faces the pole, maximising the gap; flux spreads widely due to fringing and $|\mathbf{B}|$ is substantially lower.

3.3 Inductance and Stored Energy

Inductance was extracted from the Matrix parameter on Winding1. Stored magnetic energy is $W = \frac{1}{2}LI^2$, which is exact for a linear material.

Table 3: FEA (linear iron, $\mu_r = 4000$) results at three rotor positions.

Position	L (mH)	W (mJ)	T (mN·m)
$\theta = 0°$ (aligned)	53.14	166.1	≈ 0
$\theta = 45°$	33.79	105.6	-104.9
$\theta = 90°$ (unaligned)	17.07	53.3	≈ 0

3.4 Torque vs. Angle – Comparison with Analytical Model

Figure 6 compares the linear FEA curves (5° step parametric sweep, 0°–360°, subsampled to 10° steps for clarity) with the sinusoidal analytical model from Equation (11).

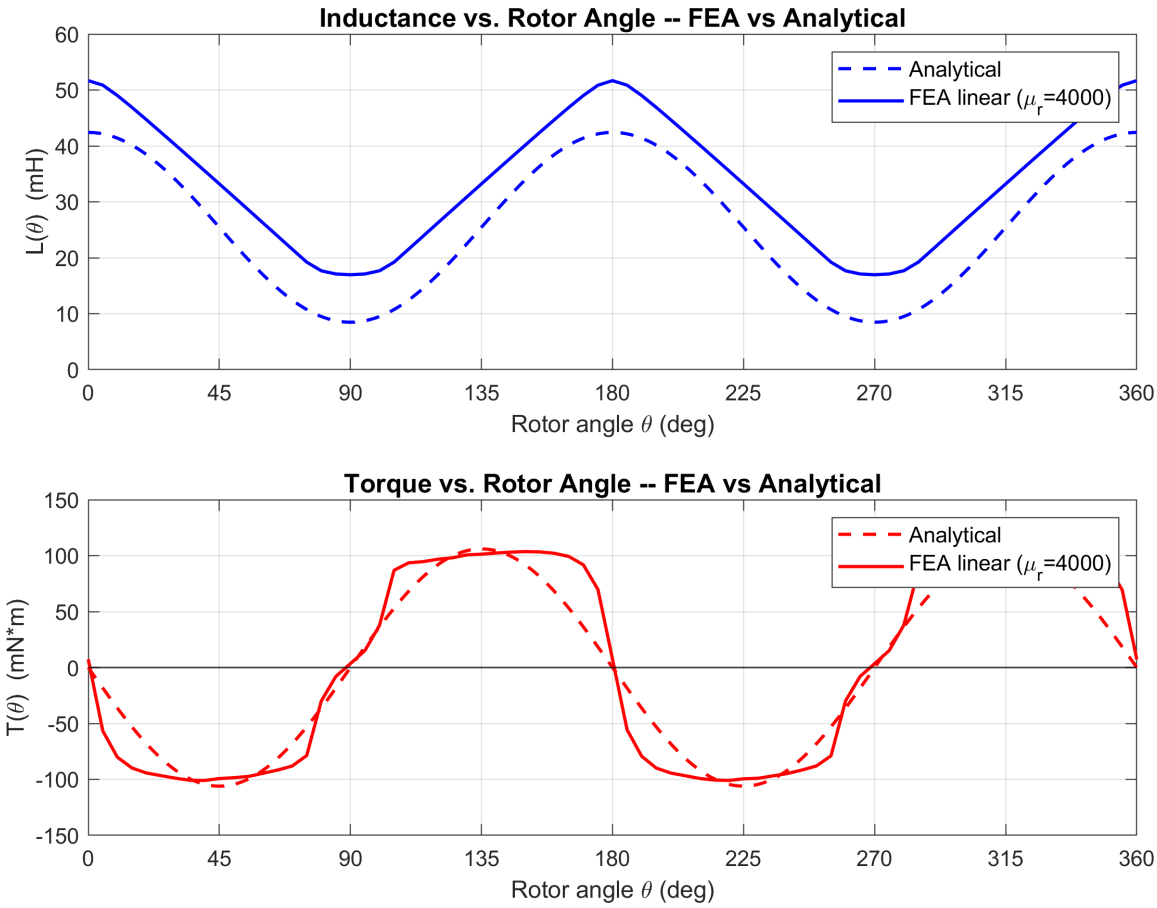

Figure 6: Inductance (top) and torque (bottom) vs. rotor angle: analytical model (dashed) vs. linear FEA with iron ($\mu_r = 4000$, markers).

3.5 Discussion

Table 4 compares the analytical and linear FEA results.

Table 4: Analytical vs. linear FEA ($\mu_r = 4000$) comparison.

Quantity	**Analytical**	**FEA (linear)**	**Difference**
$L_{\max}$ (mH)	42.41	53.14	+25.3%
$L_{\min}$ (mH)	8.48	17.07	+101%
T_{peak} (mN·m)	106.0	104.9	−1.0%

Fringing flux is the dominant source of discrepancy in inductance. At the unaligned position the total air gap is 5 mm, which is comparable to the core width (15 mm); fringing fields extend well beyond the pole face and significantly increase the effective flux area. This raises $L_{\min}$ by roughly a factor of two compared to the analytical result. At the aligned position (gap = 1 mm), fringing is less severe, giving only a 25% increase in $L_{\max}$. Since the material is linear, there is no saturation; the high $\mu_r = 4000$ means the core reluctance is negligible and the infinite-permeability assumption of the analytical model is well justified.

Torque peak is essentially unchanged (-1%) despite the large inductance differences. Because torque depends on $dL/d\theta$, and fringing increases both $L_{\max}$ and $L_{\min}$ by similar absolute amounts, the slope of $L(\theta)$ and hence the peak torque remain nearly identical to the analytical prediction.

Torque asymmetry and shifted zero crossings. The FEA torque curve is noticeably asymmetric about 90° and 180°, whereas the analytical model is a perfect sinusoid. Two physical reasons explain this:

1. *Non-symmetric stator geometry.* The rotor centre is at (45, 35) mm, offset 15 mm from the stator centre (30, 35) mm. The right yoke is only $\sim$ 2 mm thick while the left leg is 15 mm, so the magnetic circuit has a different reluctance profile for clockwise and counter-clockwise rotor excursions.

2. *Non-sinusoidal inductance profile.* The D-shaped rotor notch creates a flat plateau in $L(\theta)$ near the unaligned position ($L \approx 17.1$ mH from 85° to 95°). Since $T = \frac{1}{2}I^2\, dL/d\theta$, a flat region gives near-zero torque over a wider angular range than a sinusoid predicts, and the slopes on either side are unequal.

These effects are inherent to the actual geometry and are correctly captured by FEA but not by the sinusoidal analytical model.

4 Q3 – FEA Modelling (Non-Linear Materials)

4.1 Material Properties

The same model was re-run with the stator and rotor assigned the **steel_1010** material from the Maxwell library, using its full nonlinear B–H saturation curve. All other settings (mesh, boundary, sweep) were identical to Q2. The B–H curve for steel_1010 is included in Appendix B.

4.2 Flux Density Plots

Figures 7–9 show the flux-density magnitude at the three key rotor positions for the nonlinear simulation.

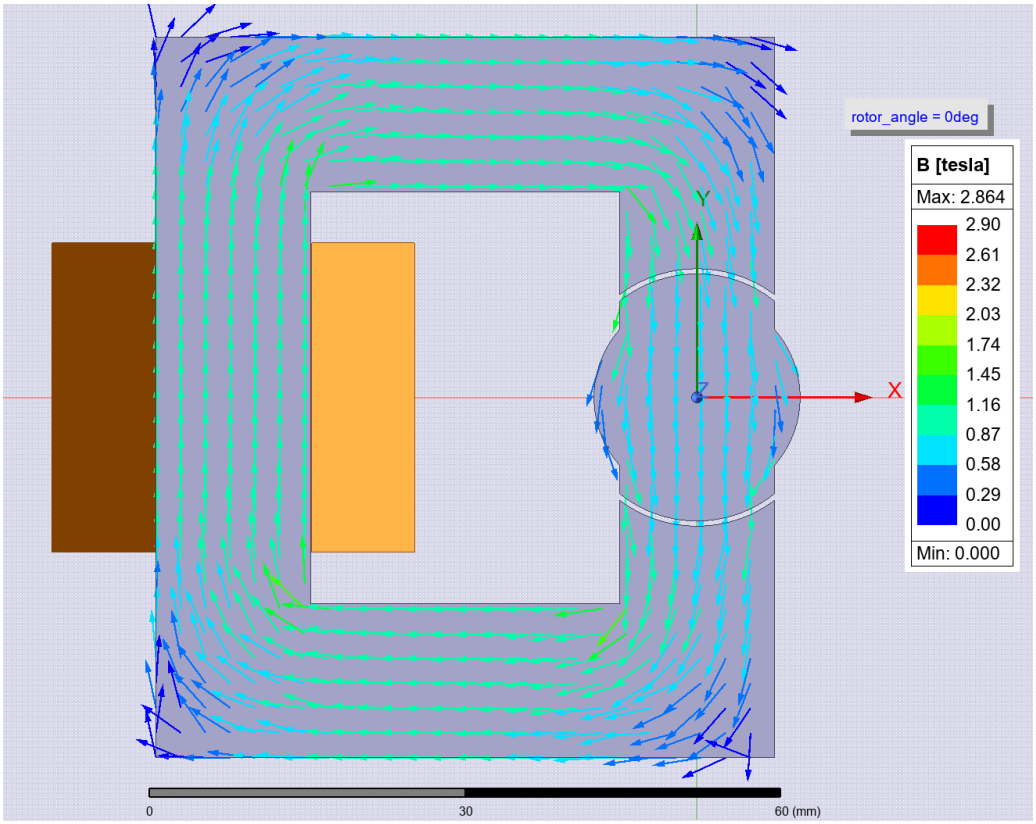

Figure 7: Nonlinear FEA: $|\mathbf{B}|$ at $\theta = 0°$ (aligned). The core reaches moderate saturation ($B \approx 0.8\,\mathrm{T}$) in the pole legs.

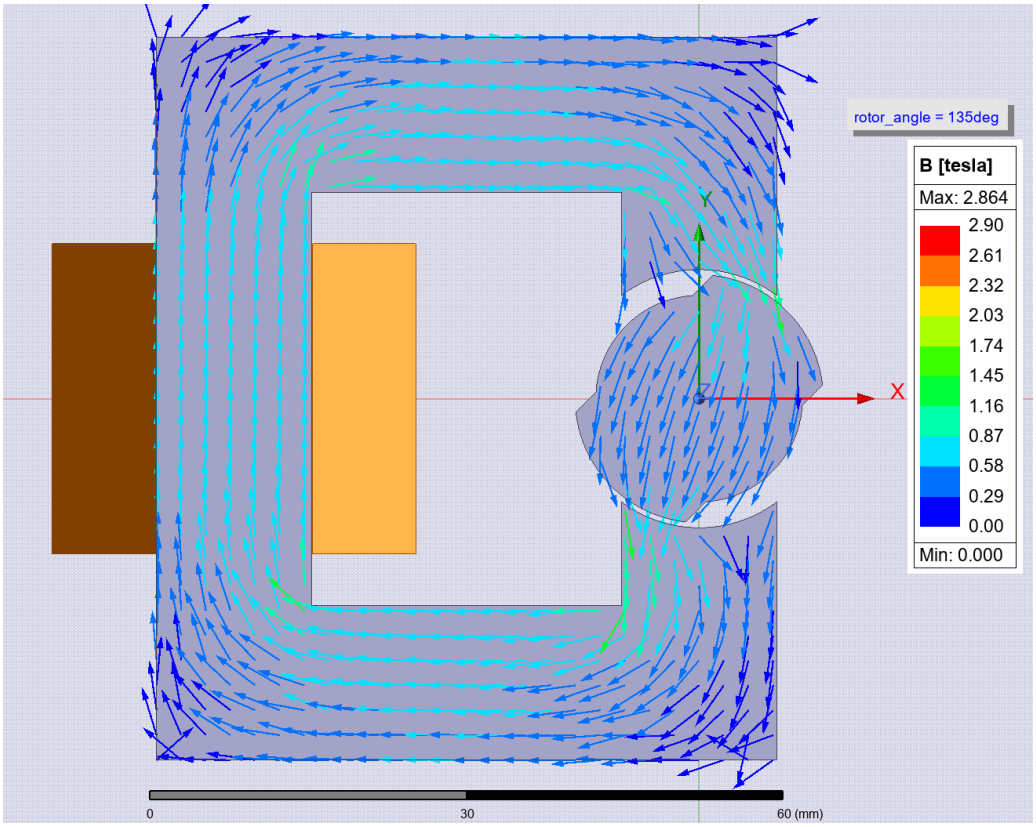

Figure 8: Nonlinear FEA: $|\mathbf{B}|$ at $\theta = 45°$ (mid-stroke). Flux density is lower than the aligned case; saturation effects are reduced.

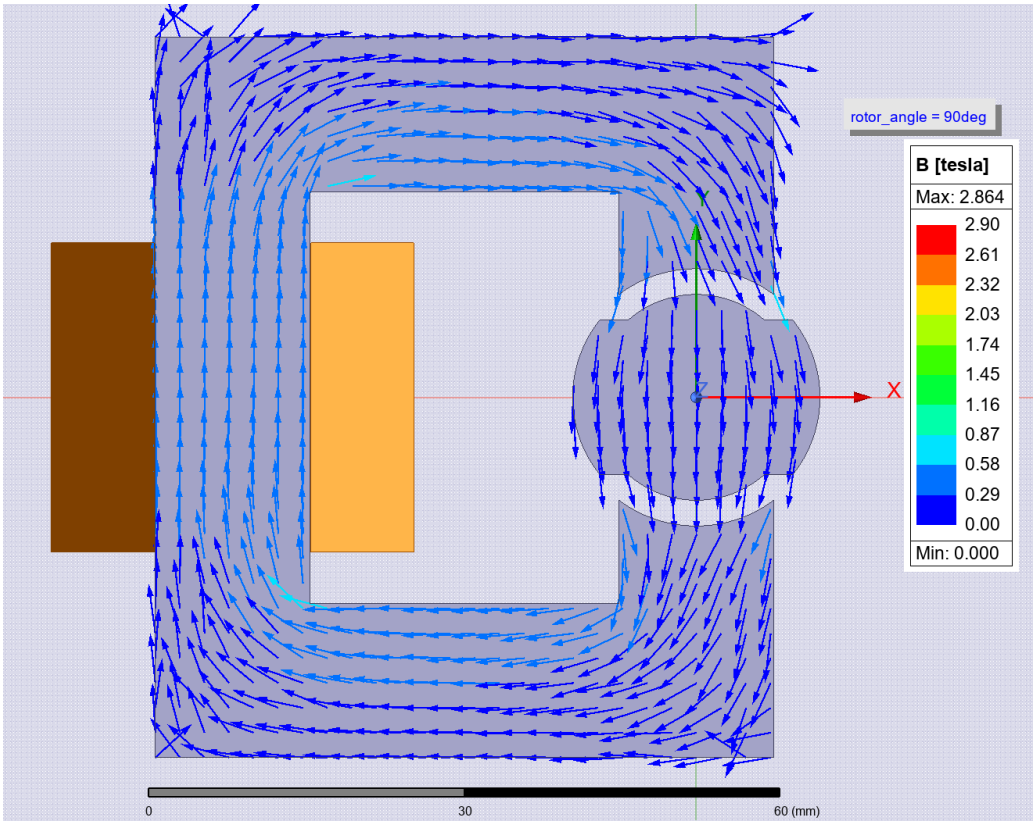

Figure 9: Nonlinear FEA: $|\mathbf{B}|$ at $\theta = 90°$ (unaligned). The large air gap dominates the reluctance; flux density in the core is low ($B \approx 0.18\,\mathrm{T}$) and the material is in the linear region of the B–H curve.

4.3 Inductance and Stored Energy

Inductance was extracted from the Matrix parameter on Winding1 using the same procedure as Q2. The stored energy $W = \frac{1}{2}LI^2$ is listed as an approximation; for a nonlinear material the true stored energy is smaller because the λ–i curve is concave (saturation reduces flux linkage at high currents relative to the linear prediction).

Table 5: FEA (nonlinear – steel_1010) results at three rotor positions. W computed as $\frac{1}{2}LI^2$; overestimates true stored energy due to saturation.

Position	L (mH)	W (mJ)	T (mN·m)
$\theta = 0°$ (aligned)	44.24	138.3	≈ 0
$\theta = 45°$	30.21	94.4	-78.1
$\theta = 90°$ (unaligned)	16.19	50.6	≈ 0

4.4 Torque vs. Angle – Comparison with Linear FEA and Analytical Model

Figure 10 shows all three models overlaid. The nonlinear FEA was run with the same 5° parametric sweep as the linear case.

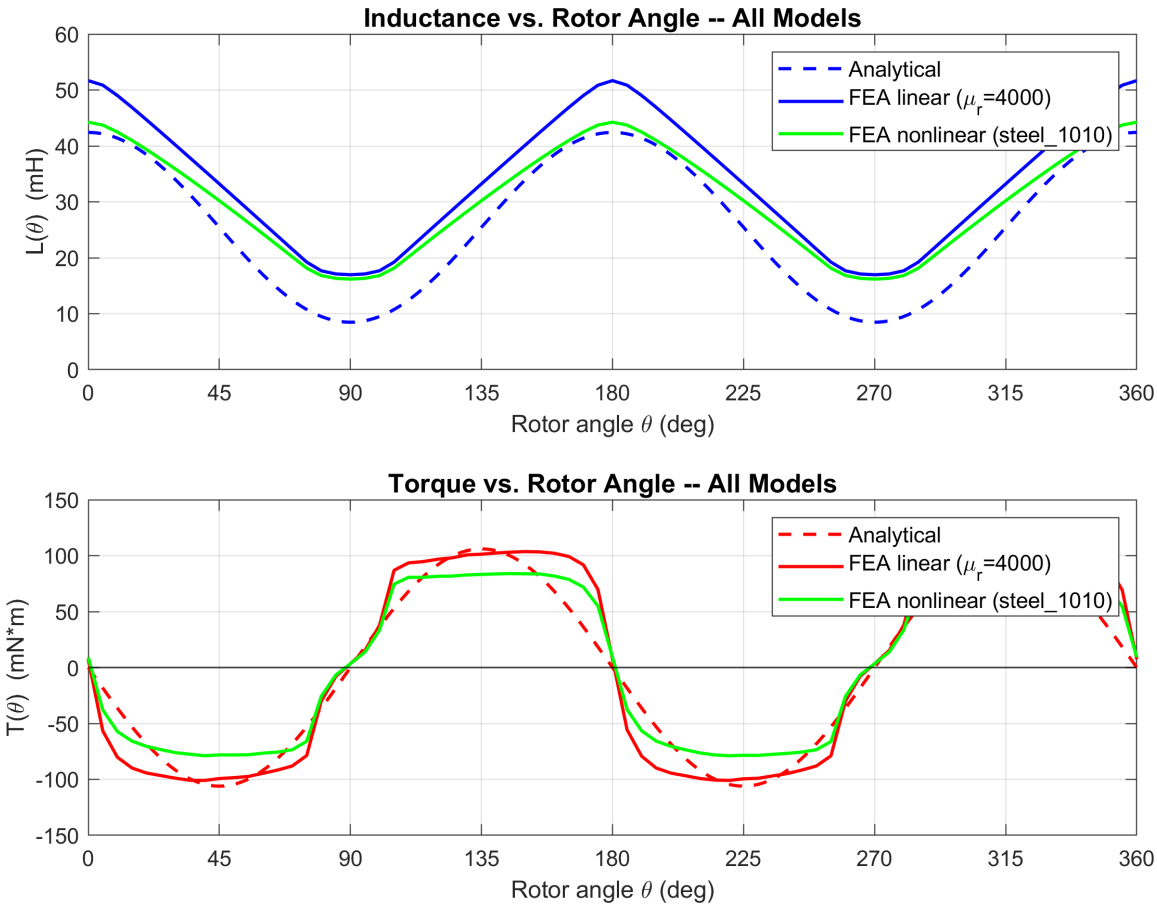

Figure 10: Inductance (top) and torque (bottom) vs. rotor angle for all three models: analytical (dashed), linear FEA ($\mu_r = 4000$), and nonlinear FEA (steel_1010).

4.5 Discussion

Table 6 summarises the three-way comparison.

Table 6: Comparison of all three models.

Quantity	Analytical	FEA linear	FEA nonlinear
$L_{\max}$ (mH)	42.41	53.14	44.24
$L_{\min}$ (mH)	8.48	17.07	16.19
T_{peak} (mN·m)	106.0	104.9	78.1

Saturation reduces $L_{\max}$ significantly. At the aligned position the total air gap is only 1 mm, so most of the MMF (750 A-turns) drives flux through the core. With steel_1010 the operating flux density reaches approximately 0.8 T in the pole legs; at this level the relative permeability of steel_1010 is around $\mu_r \approx 700$–900, far below the $\mu_r = 4000$ assumed in Q2. The effective core reluctance therefore rises, reducing $L_{\max}$ from 53.14 mH (linear FEA) to 44.24 mH (nonlinear FEA), a 16.8% decrease.

$L_{\min}$ is nearly unchanged. At the unaligned position the large air gap (5 mm) dominates the reluctance. The core carries only $B \approx 0.18$ T, well within the linear region

of the steel_1010 curve (see Appendix B), so saturation has negligible effect. $L_{\min}$ falls only from 17.07 mH to 16.19 mH (−5%).

Peak torque is reduced by ≈ 25%. Because $T_{\text{peak}} = \frac{1}{2}I^2(L_{\max} - L_{\min})$, the drop in $L_{\max}$ with little change in $L_{\min}$ reduces $(L_{\max} - L_{\min})$ from 36.1 mH to 28.1 mH, giving a peak torque of 78.1 mN · m compared to 104.9 mN · m for the linear model.

Fringing vs. saturation. Both effects are present. Fringing increases $L_{\max}$ above the analytical value (gap is small, fringing adds area), while saturation pushes $L_{\max}$ back down. In this design the two effects partially cancel, leaving the nonlinear $L_{\max}$ (44.24 mH) only about 4% above the analytical prediction (42.41 mH). For $L_{\min}$, fringing dominates (gap is large, μ_r is high anyway), so the nonlinear and linear FEA values are nearly identical and both are roughly twice the analytical result.

5 Q4 – Control Method for Continuous Rotation

5.1 The Problem

With constant DC current the torque averages to zero over a full rotation. For net unidirectional motion the current must be switched on only when it produces positive torque.

5.2 Switched Excitation

From Equation (11), torque is positive when $\sin(2\theta) < 0$, i.e. when $\theta \in (90°, 180°) \cup (270°, 360°)$. The strategy is simple: **energise the coil as the rotor moves from unaligned toward aligned; switch off before the aligned position to avoid negative torque on the return stroke.**

5.3 Average Torque

With ideal on/off switching (on at 90°, off at 180°):

$$T_{\text{avg}} = \frac{1}{\pi}\int_{90°}^{180°} \frac{I^2}{2}(L_{\max} - L_{\min})(-\sin 2\theta)\, d\theta = \frac{T_{\text{peak}}}{\pi} \tag{13}$$

For the analytical model ($T_{\text{peak}} = 106.0$ mN · m): $T_{\text{avg}} \approx 33.8$ mN · m (31.8% of peak). For the nonlinear FEA ($T_{\text{peak}} = 78.1$ mN · m): $T_{\text{avg}} \approx 24.9$ mN · m (31.8% of peak, same ratio).

Figure 11 shows the switched torque waveform for all three models.

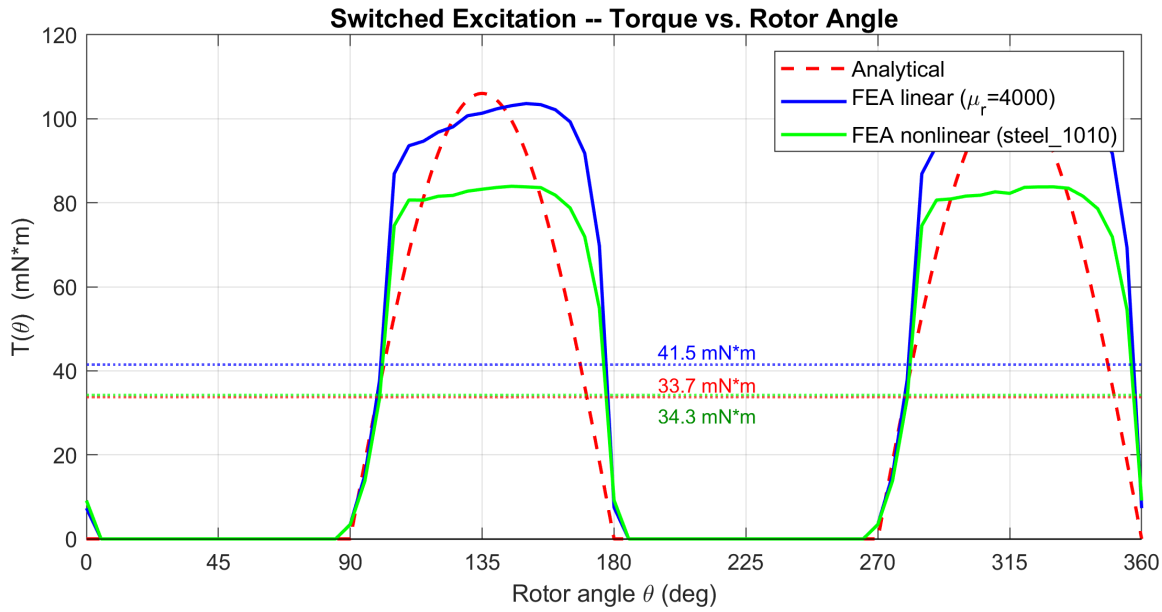

Figure 11: Switched-excitation torque: current is on only during the positive-torque stroke (90°–180° and 270°–360°). Dotted horizontal lines show the average torque for each model.

5.4 Practical Considerations

- A position sensor (Hall effect or encoder) is needed to synchronise switching with rotor angle.
- The turn-on angle should be slightly before 90° and the turn-off angle slightly before 180° to compensate for the finite current rise and fall times.
- A PWM current controller keeps the current constant during the on-interval for repeatable torque.

6 Conclusion

The analytical model predicts $L_{\min} = 8.48\,\text{mH}$, $L_{\max} = 42.41\,\text{mH}$, and a peak torque of $106\,\text{mN}\cdot\text{m}$ under 2.5 A DC. Linear FEA with iron ($\mu_r = 4000$) yields $L_{\min} = 17.07\,\text{mH}$ and $L_{\max} = 53.14\,\text{mH}$, primarily because fringing flux at the large unaligned gap is not captured by the analytical model. Despite the large inductance discrepancy, the FEA peak torque ($104.9\,\text{mN}\cdot\text{m}$) matches the analytical value to within 1%, confirming that the sinusoidal torque expression is adequate for engineering purposes. Nonlinear FEA (Q3) with steel_1010 reduces $L_{\max}$ to $44.24\,\text{mH}$ due to core saturation at $B \approx 0.8\,\text{T}$, while $L_{\min}$ is nearly unchanged ($16.19\,\text{mH}$), lowering the peak torque to $78.1\,\text{mN}\cdot\text{m}$. Switching the excitation on during the positive-torque stroke raises the average torque to $33.8\,\text{mN}\cdot\text{m}$ (analytical) and $24.9\,\text{mN}\cdot\text{m}$ (nonlinear FEA).

A MATLAB Code

```
%% EE568 HW1 - Variable Reluctance Machine: all figures

clear; clc; close all;

%% Parameters
N = 300;  I = 2.5;  mu0 = 4*pi*1e-7;  Acore = 15e-3 * 25e-3;

%% Analytical model
Lmax = N^2 * mu0 * Acore / (2 * 0.5e-3);
Lmin = N^2 * mu0 * Acore / (2 * 2.5e-3);
Lavg = (Lmax+Lmin)/2;  Lamp = (Lmax-Lmin)/2;
th_an = (0:0.5:360)';
L_an  = (Lavg + Lamp*cos(2*deg2rad(th_an))) * 1e3;          % mH
T_an  = -0.5*I^2 * 2*Lamp * sin(2*deg2rad(th_an)) * 1e3;   % mN*m
Tp    =  0.5*I^2 * (Lmax-Lmin) * 1e3;
fprintf('Analytical: Lmax=%.2f mH  Lmin=%.2f mH  Tpeak=%.1f mN*m\n', Lmax*1e3, Lmin*1e3, Tp);

%% Linear FEA data
r      = readcell('ParametricSetup1_Result.csv');  r = r(2:end,:);
th_lin = cellfun(@(s) str2double(erase(s,'deg')),         r(:,2));
T_lin  = cellfun(@(s) str2double(erase(s,'NewtonMeter')), r(:,3)) * 1e3;
L_lin  = cellfun(@(s) str2double(erase(s,'nH')),          r(:,4)) * 1e-6;

%% Nonlinear FEA data
r      = readcell('ParametricSetup1_Result_nonlinear.csv');  r = r(2:end,:);
th_nl = cellfun(@(s) str2double(erase(s,'deg')),         r(:,2));
T_nl  = cellfun(@(s) str2double(erase(s,'NewtonMeter')), r(:,3)) * 1e3;
L_nl  = cellfun(@(s) str2double(erase(s,'nH')),          r(:,4)) * 1e-6;

%% B-H data
bh   = readmatrix('steel1010_bh_curve.tab','FileType','text','NumHeaderLines',1);
H_bh = bh(:,1);  B_bh = bh(:,2);

%% Key values
fprintf('\nLinear FEA key positions:\n');
fprintf('%-6s  %-10s  %-12s  %-10s\n','Angle','L (mH)','W (mJ)','T (mN*m)');
for ang = [0 45 90]
    idx = find(th_lin==ang,1);
    Lv=L_lin(idx); Tv=T_lin(idx); Wv=0.5*(Lv*1e-3)*I^2*1e3;
    fprintf('%-6d  %-10.3f  %-12.3f  %-10.3f\n',ang,Lv,Wv,Tv);
end
fprintf('\nNonlinear FEA key positions:\n');
```

```
fprintf('%-6s  %-10s  %-12s  %-10s\n','Angle','L (mH)','W (mJ)','T (mN*m)');
for ang = [0 45 90]
    idx = find(th_nl==ang,1);
    Lv=L_nl(idx); Tv=T_nl(idx); Wv=0.5*(Lv*1e-3)*I^2*1e3;
    fprintf('%-6d  %-10.3f  %-12.3f  %-10.3f\n',ang,Lv,Wv,Tv);
end

%% Fig 1: Analytical L and T
fig1 = figure('Units','centimeters','Position',[2 2 22 16]);

subplot(2,1,1);
plot(th_an, L_an, 'b-', 'LineWidth',2);
hold on;
yline(Lmax*1e3,'k:','LineWidth',0.8);
yline(Lmin*1e3,'k:','LineWidth',0.8);
text(5,  Lmax*1e3+0.8, sprintf('L_{max} = %.2f mH',Lmax*1e3),'FontSize',10);
text(95, Lmin*1e3+0.8, sprintf('L_{min} = %.2f mH',Lmin*1e3),'FontSize',10);
xlabel('Rotor angle \theta (deg)','FontSize',11);
ylabel('L(\theta)  (mH)','FontSize',11);
title('Inductance vs. Rotor Angle','FontSize',12);
grid on;  xlim([0 360]);  xticks(0:45:360);

subplot(2,1,2);
plot(th_an, T_an, 'r-', 'LineWidth',2);
hold on;
yline(0,'k-','LineWidth',0.8);
yline( Tp,'k:','LineWidth',0.8);
yline(-Tp,'k:','LineWidth',0.8);
text(140,  Tp+3, sprintf('+%.1f mN*m',Tp),'FontSize',10);
text(50,  -Tp-6, sprintf('-%.1f mN*m',Tp),'FontSize',10);
xlabel('Rotor angle \theta (deg)','FontSize',11);
ylabel('T(\theta)  (mN*m)','FontSize',11);
title('Torque vs. Rotor Angle (DC excitation)','FontSize',12);
grid on;  xlim([0 360]);  xticks(0:45:360);  ylim([-130 130]);

exportgraphics(fig1,'analytical_LT_plots.png','Resolution',300);

%% Fig 2: B-H curve
fig2 = figure('Units','centimeters','Position',[2 2 14 10]);
plot(H_bh, B_bh, 'k-', 'LineWidth',1.5);
xlabel('H  (A/m)','FontSize',11);
ylabel('B  (T)','FontSize',11);
title('B--H Curve: steel\_1010','FontSize',12);
grid on;
exportgraphics(fig2,'bh_curve_steel1010.png','Resolution',300);

%% Fig 3: Q2 - Linear FEA vs Analytical
fig3 = figure('Units','centimeters','Position',[2 2 22 16]);
```

```

subplot(2,1,1);
plot(th_an,  L_an,  'b--','LineWidth',1.5,'DisplayName','Analytical');
hold on;
plot(th_lin, L_lin, 'b-', 'LineWidth',1.5,'DisplayName','FEA linear (\mu_r=4000)');
xlabel('Rotor angle \theta (deg)','FontSize',11);
ylabel('L(\theta)  (mH)','FontSize',11);
title('Inductance vs. Rotor Angle -- FEA vs Analytical','FontSize',12);
legend('Location','northeast','FontSize',10);
grid on;  xlim([0 360]);  xticks(0:45:360);

subplot(2,1,2);
plot(th_an,  T_an,  'r--','LineWidth',1.5,'DisplayName','Analytical');
hold on;
plot(th_lin, T_lin, 'r-', 'LineWidth',1.5,'DisplayName','FEA linear (\mu_r=4000)');
yline(0,'k-','LineWidth',0.8,'HandleVisibility','off');
xlabel('Rotor angle \theta (deg)','FontSize',11);
ylabel('T(\theta)  (mN*m)','FontSize',11);
title('Torque vs. Rotor Angle -- FEA vs Analytical','FontSize',12);
legend('Location','northeast','FontSize',10);
grid on;  xlim([0 360]);  xticks(0:45:360);

exportgraphics(fig3,'fea_comparison.png','Resolution',300);

%% Fig 4: Q3 - All models
fig4 = figure('Units','centimeters','Position',[2 2 22 16]);

subplot(2,1,1);
plot(th_an,  L_an,  'b--','LineWidth',1.5,'DisplayName','Analytical');
hold on;
plot(th_lin, L_lin, 'b-', 'LineWidth',1.5,'DisplayName','FEA linear (\mu_r=4000)');
plot(th_nl,  L_nl,  'g-', 'LineWidth',1.5,'DisplayName','FEA nonlinear (steel\_1010)');
xlabel('Rotor angle \theta (deg)','FontSize',11);
ylabel('L(\theta)  (mH)','FontSize',11);
title('Inductance vs. Rotor Angle -- All Models','FontSize',12);
legend('Location','northeast','FontSize',10);
grid on;  xlim([0 360]);  xticks(0:45:360);

subplot(2,1,2);
plot(th_an,  T_an,  'r--','LineWidth',1.5,'DisplayName','Analytical');
hold on;
```

```
plot(th_lin, T_lin, 'r-', 'LineWidth',1.5,'DisplayName','FEA linear (\mu_r=4000)');
plot(th_nl,  T_nl,  'g-', 'LineWidth',1.5,'DisplayName','FEA nonlinear (steel\_1010)');
yline(0,'k-','LineWidth',0.8,'HandleVisibility','off');
xlabel('Rotor angle \theta (deg)','FontSize',11);
ylabel('T(\theta)  (mN*m)','FontSize',11);
title('Torque vs. Rotor Angle -- All Models','FontSize',12);
legend('Location','northeast','FontSize',10);
grid on;  xlim([0 360]);  xticks(0:45:360);

exportgraphics(fig4,'nonlinear_comparison.png','Resolution',300);

%% Fig 5: Q4 - Switched excitation
T_sw_an  = max(T_an,  0);
T_sw_lin = max(T_lin, 0);
T_sw_nl  = max(T_nl,  0);
Tavg_an  = mean(T_sw_an);
Tavg_lin = mean(T_sw_lin);
Tavg_nl  = mean(T_sw_nl);
fprintf('\nSwitched average torque:\n');
fprintf('  Analytical:    %.2f mN*m\n', Tavg_an);
fprintf('  Linear FEA:    %.2f mN*m\n', Tavg_lin);
fprintf('  Nonlinear FEA: %.2f mN*m\n', Tavg_nl);

fig5 = figure('Units','centimeters','Position',[2 2 22 10]);
plot(th_an,  T_sw_an,  'r--','LineWidth',1.5,'DisplayName','Analytical');
hold on;
plot(th_lin, T_sw_lin, 'b-', 'LineWidth',1.5,'DisplayName','FEA linear (\mu_r=4000)');
plot(th_nl,  T_sw_nl,  'g-', 'LineWidth',1.5,'DisplayName','FEA nonlinear (steel\_1010)');
yline(Tavg_an,  'r:', 'LineWidth',1.2, 'HandleVisibility','off');
yline(Tavg_lin, 'b:', 'LineWidth',1.2, 'HandleVisibility','off');
yline(Tavg_nl,  'g:', 'LineWidth',1.2, 'HandleVisibility','off');
yline(0,'k-','LineWidth',0.8,'HandleVisibility','off');
text(195, Tavg_an+3,  sprintf('%.1f mN*m',Tavg_an),  'Color','r', 'FontSize',9);
text(195, Tavg_lin+3, sprintf('%.1f mN*m',Tavg_lin), 'Color','b', 'FontSize',9);
text(195, Tavg_nl-5,  sprintf('%.1f mN*m',Tavg_nl),  'Color',[0 0.55 0],  'FontSize',9);
xlabel('Rotor angle \theta (deg)','FontSize',11);
ylabel('T(\theta)  (mN*m)','FontSize',11);
title('Switched Excitation -- Torque vs. Rotor Angle','FontSize',12);
legend('Location','northeast','FontSize',10);
grid on;  xlim([0 360]);  xticks(0:45:360);

exportgraphics(fig5,'switched_torque.png','Resolution',300);
```

```
fprintf('All figures saved.\n');
```

Listing 1: All figures script (`ee568_hw1.m`).

B Material Properties – steel_1010 B–H Curve

The B–H data exported from the ANSYS Maxwell material library is plotted in Figure 12 and tabulated in Table 7. The curve is generated by `ee568_hw1.m`.

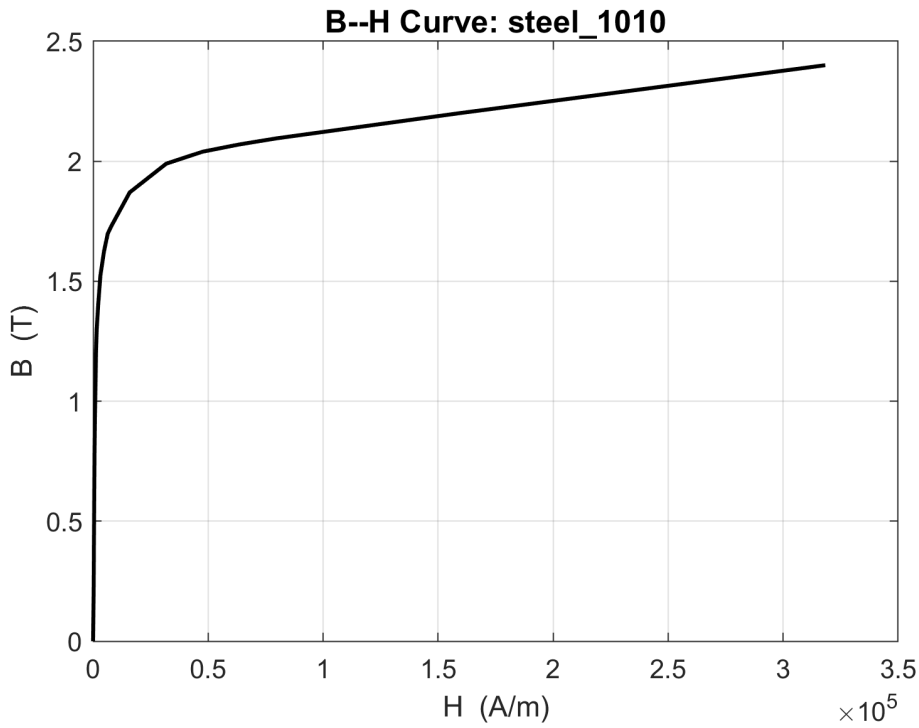

Figure 12: B–H curve for steel_1010 (ANSYS Maxwell library).

Table 7: steel_1010 B–H data (22 points as exported).

H (A/m)	B (T)	H (A/m)	B (T)
0	0.000	3 183.1	1.524
238.7	0.200	4 774.6	1.626
318.3	0.320	6 366.2	1.698
358.1	0.400	7 957.7	1.730
437.7	0.501	15 915.5	1.870
477.5	0.561	31 831.0	1.990
636.6	0.791	47 746.5	2.040
795.8	0.931	63 662.0	2.070
1 114.1	1.101	79 577.5	2.095
1 273.2	1.202	159 155.0	2.200
1 591.5	1.302	318 310.0	2.400
2 228.2	1.403		