Department of Education

STEM Education

National Schools of Excellence

Chemistry Students' Resource Book

Grade 12

Term 3

DOMAIN	Phylum
SCIENCE	Chemistry
Technology	
Engineering	
Mathematics	

Issued free to schools by the Department of Education

Published in 2021 by the Department of Education, Papua New Guinea

© Copyright 2021, Department of Education, Papua New Guinea

All rights reserved. No part of this publication may be reproduced, stored in a retrieval system or transmitted by any form or by any means electronic, mechanical, photocopying, recording or otherwise without the prior written permission of the publisher.

ISBN …….

Acknowledgements

Ultima Thulë Ltd was engaged by the Department of Education to develop the STEM Curriculum. The content was generated by writers from universities, secondary schools, new university graduates with knowledge in the subject matter and industry subject experts. Quality assurance groups and the Science Subject Advisory Committee have also contributed to the development of this syllabus.

This document was developed with support from the General Education Services Division of the Department of Education.

Table of Contents

THEMA: ARTIFICIAL INTELLIGENCE **1**

MODULE 12.1: ARTIFICIAL MOLECULAR MACHINES **3**

Topic 1: Introduction to Artificial Molecular Machine **4**

Topic 2: Catenanes and Rotaxanes **7**

Topic 3: Other Protein Based Motors Under Development **9**

Sample Module Activities **14**

THEMA: ROBOTICS **15**

MODULE 12.1: CHEMISTRY MEETS ROBOTS **17**

Topic 1: Acidity Theories (Recall) **18**

Topic 2: Robotics (Basic) **30**

Topic 3: Programming a Robot **41**

SAMPLE TOPIC ACTIVITIES **47**

References 50

THEMA: ARTIFICIAL INTELLIGENCE

Introduction

Artificial Intelligence (AI) is often perceived to be predominantly related to a computer science study that programs or instructs computer machines to mimic human-behavior. However, AI it is not limited to this definition and academic discipline because Intelligence includes different features such as being:

- A property of some entity or agent that interacts with some form of environment
- An indication of an entity's ability to succeed (by a given set of criteria) at a particular task or achieving a stated goal
- Authentic in a sense that there is an emphasis on learning, adaptation, and flexibility within a wide range of environments and scenarios.

With the aforementioned features of intelligence, we can therefore define Artificial Intelligence (AI) as:

"Artificial Intelligence is an entity (or collective set of cooperative entities), able to receive inputs from the environment, interpret and learn from such inputs, and exhibit related and flexible behaviors and actions that help the entity achieve a particular goal or objective over a period of time."

This means that the entity of which artificial intelligence can be applied to can include other systems apart from computer machines.[1]

[1] (What is Artificial Intelligence? An Informed Definition, n.d.)

MODULE 12.1: ARTIFICIAL MOLECULAR MACHINES

4-5 Weeks

Machines have revolutionized civilization and improved our quality of life. What's next once we've moved from mass-producing extremely large computer machine technology to sending a man to the moon? Many chemists are now looking at the idea of constructing gadgets from molecules. Because they are man-made or "artificial," these molecules are known as Artificial Molecular Machines.

Knowing how to control motion on a miniscule scale necessitates some chemical knowledge, yet tiny machines have the potential to revolutionize everything from health to material science, where molecular processes are crucial. A machine is any device that turns energy into at least one moving part – each with its own function – and then combines these parts to produce a useful motion as an output known as "work."

Consider an old watch: all of the interconnecting cogs are arranged in such a manner that the hands on the dial move at the correct rate.

Making machines smaller has several obvious advantages, including the ability to transport them more easily and move them more precisely.

Linking Modules

Prerequisites: NIL

Broad Content Standard

12.1 To familiarize oneself with the potential of creating molecular machines.

Content Benchmark

Students' ability to master the knowledge and skills of:

- Artificial Molecular Machines
- Catenanes
- Rotaxanes

Topic 1: Introduction to Artificial Molecular Machine

Brief History

Richard Feynman, the Nobel Prize-winning physicist and bongo player, discussed the difficulty of manipulating and directing things on a small scale in 1959. By small, we mean a few millionths of a millimeter small machines made up of one or a few molecules. Eric Drexler, a pioneer in nanotechnology, came found a transcript of Feynman's presentation on machines 20 years later. He expanded on some of the concepts and released a paper titled "Molecular Engineering" in 1981. Drexler foresaw molecule-sized machines that could manipulate chemical reactants on an atomic scale and even create new materials from the ground up, which would be enormously useful.

Consider how engineers have been able to downsize electrical components in recent decades, transforming computers the size of houses into cell phones. Shrinking mechanical components could enable a similar revolution. Building nanoscale machines, on the other hand, presents a completely new set of obstacles than those faced by many engineers and chemists.

Challenges of AMMS

- When items are reduced to the size of molecules, they behave differently than they do on larger scales. A molecular nut-and-bolt could not be easily wrenched apart without careful design because electrostatic forces between the molecules, known as Van der Waals forces, would attract them together far more than friction forces in ordinary nuts and bolts. These are the similar pressures that allow gecko feet to attach to ceilings and other surfaces.

- Another issue is that moving the components of a molecular machine is more difficult. A little molecule of air colliding with a piston in your automobile engine has no effect on how it travels, but the same air molecule may send a molecular machine flying or possibly destroy it. Even if the damage isn't severe, the constant bombardment from adjacent molecules, known as "THERMAL NOISE," could cause the components to wander about randomly, making it harder to control their motions, which is exactly what we need to accomplish for molecular machines to work.

- Finally, chemical bonds connect most molecules, which develop as a result of electrostatic attraction between molecules.

Chemical Bonds

Chemical bonds come in a variety of forms, but they all tend to be hard and prevent free movement between the two pieces. Consider a lot of water molecules bound into the crystal structure of an ice cube or even clumped together in liquid water for the type of movement that almost all machines rely on. The positively charged hydrogen atoms of surrounding water molecules are attracted to the negatively charged oxygen atom, establishing hydrogen bonds between them. Engineers and scientists must figure out how to use the "MECHANICAL

BOND" in order to develop molecular machines. The form of the molecules connects them in a Mechanical Bond.

Individual atoms within a molecule are not strongly attracted to one another, yet they can't completely separate without destroying the chemical bonds between them. It's similar to how, despite the fact that they aren't physically attached, your key can't fall off your keyring by accident.

Inorganic (Chemical) Molecular Machines

Chemists have been able to develop, alter, and control a wide range of molecular machines in the last two decades. Many of these devices resemble macro-scale machinery we use every day, such as gears, propellers, shuttles, and so on. Not only that, but all of these machines are simple to make artificially and are far more durable than natural molecular machines. The majority of these machines are organic carbon, nitrogen, and hydrogen molecules, with the presence of a metal ion necessary on occasion. The performance of these machines is dependent on electrostatic interactions, covalent bonding, and hydrogen bonding. Chemically, electrochemically, and photochemically, such artificial chemical machines may be controlled in a variety of ways (through irradiation by light). Some of them can be controlled in many ways, giving them additional versatility and increasing their value. Depending on the performance needs and circumstances, a scientist may have more design flexibility when it comes to chemical molecular machines. Many of the molecular machineries discussed in this section are based on Rotaxanes and Catenanes. These are groups of interconnected organic molecule compounds with various shapes and characteristics that regulate and guide their performance.

Catenae

Scientists have been working on this form of linked molecule since the 1960s. "CATENAE" was given to them, which means "chains of two or more linked atom rings." Catenaeanes were known to exist, but they were highly uncommon and difficult to obtain for scientific research, let alone practical purposes. Until a French scientist named Jean Pierre Sauvage made an unexpected discovery in 1983. Sauvage's initial study focused on UV-induced chemical processes, one of which includes C-shaped molecules that attach to copper ions. Simulating the process revealed that by altering the technique, he could produce Catedanes in much larger amounts than before. The initial step was to connect a copper ion to the inside of a ring-shaped molecule. The same coper ion can then be attached to by a C-shaped molecule that weaves its way through the ring. If the circumstances are ideal, a second C-shaped molecule can chemically attach to the first, generating a second interlocking ring.

The extraction of that copper ion and the synthesis of two molecular rings in a mechanically bound structure were the results of Sauvages' chemical process. Those rings, like a machine, may freely revolve in respect to one another. To get things going, Sauvage went so far as to construct tangled compounds and increasingly complex chains. Because the rings are not uniform, if the charge of that ion changes, they will adjust to more electrically stable locations. Sauvages' team identified a mechanism to spin one of the rings around the other by combining Catenin with a sandwiched copper ion in 1994. When a copper ion loses an electron in a chemical reaction, one of the rings rotates 180 degrees and twists back if the copper ion

recaptures the electron. We must master this motion if we want to construct molecular machines with spinning pieces, such as a molecular propeller that can swim through liquids.

We will discuss Catenanes in detail in Topic 2.

Rotaxane

Scientist James Fraser Stoddard was working on a different chemical method across the English Channel at the same time. Stoddard was an expert in the laws of attraction. As you are probably aware, positively charged chemical structures are attracted to negatively charged chemical structures. The ROH taxane, a molecular machine consisting of a ring coupled to a thread, was created using this technology by Stoddard's team. In 1991, Stoddart's group built a nearly complete ring of atoms with no electrons. Also developed was a rod-shaped molecule with two electron-rich sites and bulky silicon-based end caps. Electrostatic attraction led the ring to thread onto the axle, where it could be closed up with a chemical reaction to form a complete ring. The positively charged ring was drawn to the negatively charged areas on the axle because we're dealing with molecules, but it wasn't held in place by chemical bonds. When the ring had a certain amount of heat energy, it had the ability to move about. The researchers were able to make the ring hop between the two negatively charged sports on the axle in 1994, while the bulky groups kept it from falling off, according to Stoddart.

We will discuss Catenanes in detail in Topic 3.

Topic 2: Catenanes and Rotaxanes

Catenanes

Catenanes are a sort of interlocked structure that is part of a developing family of molecular machineries. Supramolecular aid to molecular synthesis is used to make them. A Catenanes has the overall structure of two interlocking ring-like components that are kept together by a mechanical bond rather than by valence forces. Both macrocyclic components have atoms of redox-active or photochemically reactive groups as recognition sites. It is conceivable for both rings to have recognition sites that are similar. One of the rings may spin within the other, with noncovalent interactions stabilizing the conformations, but the two states of the inner ring deviating by 180o will be undetectable (degenerate).

Different recognition sites inside macrocycles are desirable for improved control and distinguishing molecular conformations. Then, using their own unique triggers, they may be operated separately. One recognition site inside a macrocycle can have its stereo-electronic property changed such that it has a stronger affinity for the sites on the opposite ring at one point. The spinning macrocycle will be guided by the force balance to a stable conformation that needs that specific site to be within the other macrocycle at this time Similarly, with other stimuli, this attraction can be switched off or even reversed, with the affinity of the spinning macrocycle's second recognition site increasing towards those on the static macrocycle. Computational modeling, simulation, and analysis of molecular machine motion are required. Catenanes, like rotaxanes, can be created to influence chemical, photochemical, or electrochemical processes. One such catenane molecular motor is seen in Figure SC-AI-SRB-1.

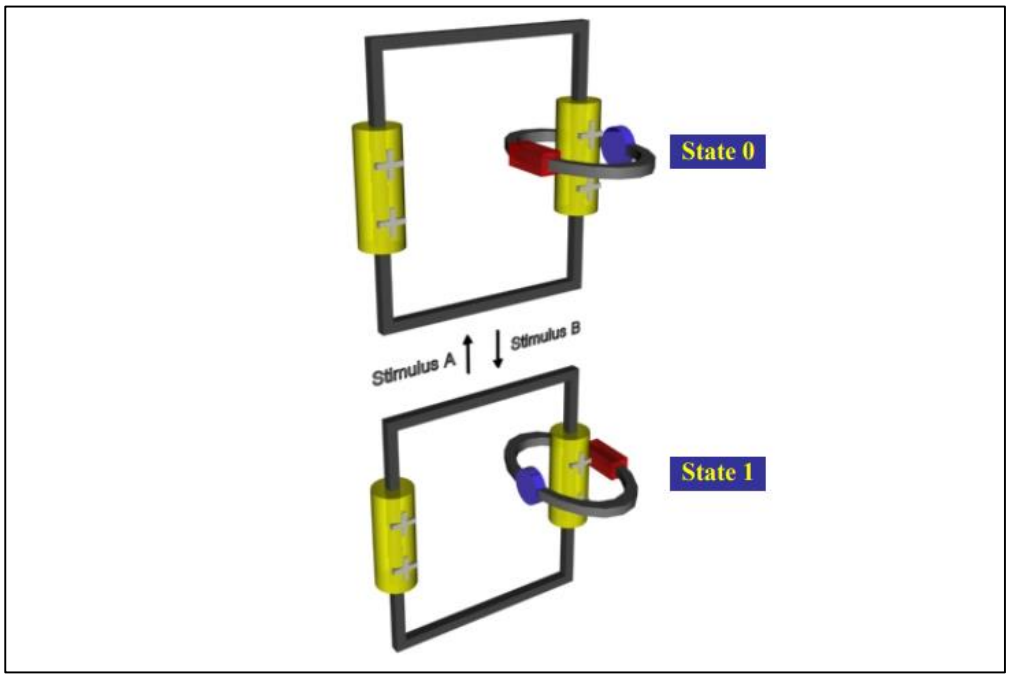

Figure SC-AI-SRB- 1:A non-degenerate catanane. one of the rings (the moving rings) has two different recognition sites in it. Both sidtes can be turned 'off' or 'on' with different stimuli. When the green site is activated, the force and energy balance results in the first conformation, whereas when the red one is activated, the second conformation results. They can be named states 0 and 1 analogues to binary machine language.

It is desirable to have recognition sites for both rotaxane and catenane-based molecular machines so that they may be controlled outside. As a result, it is better to construct redox-active or photo-active sites. Self-assembly of catenanes is also possible. The electrically controlled bistable switch is an example of catenane built molecular motors. Catenanes are molecular analogues of ball and socket and universal joints, which is a natural way of thinking about them.

Rotaxanes

As illustrated in Fig. SC- AI-SRB-2, the Rotaxane family of molecular machines consists of two parts: a dumb-bell shaped compound with two heavy chemical groups at the extremities and a light, cyclic component termed macrocycle interlocked between the heads. It has been demonstrated] that a rotaxane configuration may be used to make a reversible switch. Two chemically active recognition sites in the dumb-neck bell's area are required for this. The thread in this case was constructed of polyether, with recognition sites indicated by hydroquinol units and big triisoproplylsilyl groups at the ends. The system that interacts with the recog has a tetracationic bead that was created and self-assembled.

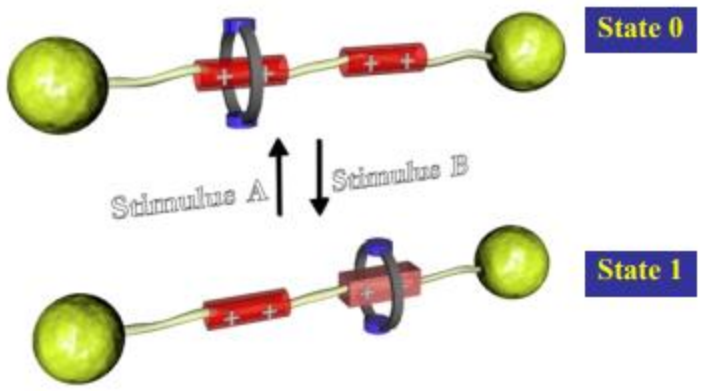

Figure SC-AI-SRB- 2: A typical rotaxane shuttle setup. The macrocycle encircles the thread-like portion of the dumb-bell with heavy groups at its ends. The thread has two recognition sites which can be altered reversibilty so as to make the macrocycle shuttle between the two site.

The macrocycle has a natural low energy state on the first recognition site, but can be switched among the two sites reversibly upon application of suitable stimuli. Depending on the type of rotaxane setup the stimuli can be chemical, electrochemical or photochemical. The stereo-electronic properties of the recognition sites can be altered protonation or deprotonation, or by oxidation or reduction, thereby changing their affinity towards the macrocycle. In a recent example, light induced acceleration of rotaxane motion was achieved by photoisomerization , while similar controls through alternating current (oscillating electric fields) was shown before.

Topic 3: Other Protein Based Motors Under Development

Many more molecular devices that bore a remarkable similarity to macroscopic machinery have been revealed in the last four decades. Chemical compounds that act like bevel gears and propellers were first reported in the late 1960s and early 1970s, and they are still being researched today.

When two bulky rings, such as aryl rings, are joined to one central atom, known as the focal atom, a molecular propeller is produced. A clockwise rotation of one of these rings causes the opposite ring to rotate counterclockwise around the connection connecting it to the center atom. It is also feasible to use a three-propeller configuration. A synchronized gear-like rotation has been seen in triptycyl and amide ring systems.

It has been developed 'Molecular Turnstiles,' which are spinning plates within a macrocycle. Such rotations, on the other hand, were uncontrollable. Kelly et al. established a molecular brake, which allowed them to regulate the rotation of a molecular ring around a link using chemical inputs. The insertion and removal of a metal may govern the propeller-like movement of a 9-triptycyl ring system, which was previously utilized in gears and was now coupled to a 2, 2'-bipyridine unit. As a result, single-bond free rotations can be halted and released at will.

The chiroptical molecular switch is another form of molecular switch. Another big cyclic molecule was discovered to be light-stimulable and switchable between its two stable isomeric forms P and M' (right and left-handed). The cis and trans conformations of the chemical 4-[9'(2'-meth-oxythioxanthylidene)]-7-methyl-1,2,3,4- tetrahydrophenanthrene can be interconverted depending on the frequency of light pummeled on it. Koumura and colleagues created a fascinating molecular motor operated by light and/or heat, allowing for a modest modification on this switch.

In a helical alkene, instead of rotating around a single bond as in the ratchet described above, the rotation was achieved around a carbon-carbon double bond. A rotation requiring four isomerization stages in the molecule (3R,3'R) might be triggered by ultraviolet light or a change in temperature. -(P,P)-trans1,1',2,2',3,3',4,4'-octahydro-3,3'-dimethyl-4,4',-biphenanthrylidene. A second-generation motor is currently functioning, together with eight more motors made of the same material. The upper and bottom sections of this revised motor are separate, and it runs at a faster pace. This motor is also a nice illustration of how controlled molecular motion may be utilized to cause a macroscopic change in a system that can be seen with the naked eye. When light-driven motors are used inside liquid crystal (LC) films, they can cause a color shift by causing mesogenic molecules to reorganize.[2]

Artificial and biological molecular machines are the two primary groups of molecular machinery. Artificial molecular machines (AMMs) are molecules that have been developed and produced artificially, whereas biological molecular machines can be found in nature and have evolved into their current forms during abiogenesis on Earth.

[2] Nanorobotics (fractal.org)

Artificial

Chemists have created a wide range of artificial molecular machines (AMMs) that are very basic and tiny in comparison to biological molecular machines. Sir J. Fraser Stoddart invented the first AMM, a molecular shuttle. A molecular shuttle is a rotaxane molecule with two bulky stoppers mechanically linked onto an axle. Chemists have created a wide range of artificial molecular machines (AMMs) that are very basic and tiny in comparison to biological molecular machines. Sir J. Fraser Stoddart invented the first AMM, a molecular shuttle. A molecular shuttle is a rotaxane molecule with two bulky stoppers mechanically linked onto an axle.

Figure SC-AI-SRB- 3: Overcrowded alkane molecular motor.

Molecular motors

Molecules with directed rotating motion around a single or double bond are referred to as molecular motors. Chemical processes activate single bond rotary motors, whereas light activates double bond rotary motors. Careful molecular design can also be used to adjust the motor's spinning speed. Nanomotors made of carbon nanotubes have been created as well.

Molecular propeller

A molecular propeller is a molecule that, when rotated, may propel fluids owing to its unique form, which is similar to that of macroscopic propellers. It contains multiple molecular-scale blades connected to the circumference of a nanoscale shaft at a specific pitch angle. Molecular gyroscope is another term for a gyroscope that is made up of molecules.

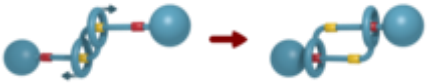

Figure SC-AI-SRB- 4: Daisy chain [2]rotaxane. These molecules are considered as building blocks for artificial muscle.

Molecular switch

A molecule that can be reversibly switched between two or more stable states is known as a molecular switch. Changes in pH, light (photoswitch), temperature, an electric current, the microenvironment, or the presence of a ligand can cause the molecules to switch between states.

Figure SC-AI-SRB- 5: Rotaxane based molecular shuttle.

Molecular shuttle

A molecule that can shuttle molecules or ions from one area to another is known as a molecular shuttle. A rotaxane is a typical molecular shuttle that allows a macrocycle to travel between two locations or stations along the dumbbell backbone.

Nanocar

Nanocars are single-molecule vehicles that mimic macroscopic autos and are crucial for understanding molecular transport on surfaces. James M. Tour was the first to create nanocars in 2005. They had an H-shaped chassis with four fullerene molecular wheels at each corner. Ben Feringa and colleagues created the world's first motorized nanocar in 2011, with molecular motors linked to the chassis as revolving wheels. Using energy from a scanning tunneling microscope tip, the authors were able to show directional mobility of the nanocar on a copper surface. The world's first ever Nanocar Race was held in Toulouse in 2017.

Molecular balance

A molecule that can interconvert between two or more conformational or configurational states in response to the dynamic of multiple intramolecular and intermolecular driving forces, such as hydrogen bonding, solvophobic/hydrophobic effects, interactions, and steric and dispersion interactions, is referred to as a molecular balance. [33] Small molecules or macromolecules like proteins can act as molecular balances. Cooperatively folded proteins, for example, have been employed to evaluate interaction energies and conformational propensities as molecular balances.

Molecular tweezers

Host molecules that can hold objects between their two arms are known as molecular tweezers. Non-covalent bonding, such as hydrogen bonding, metal coordination, hydrophobic forces, van der Waals forces, interactions, or electrostatic phenomena, are used to bind things in the open cavity of the molecular tweezers. There have been reports of molecular tweezers made of DNA, which are classified as DNA machines.

Molecular sensor

A molecule that interacts with an analyte to cause a measurable change is referred to as a molecular sensor. Molecular sensors combine molecular recognition with a reporter to detect the presence of a specific item.

Molecular logic gate

A molecule that conducts a logical operation on one or more logic inputs and generates a single logic output is known as a molecular logic gate. The molecular logic gate, unlike a molecular sensor, will only output when a certain combination of inputs is present.

Molecular assembler

A molecular assembler is a molecular machine that can precisely place reactive molecules to direct chemical processes.

Molecular hinge

A molecule that can be shifted from one configuration to another in a reversible manner is known as a molecular hinge. When azobenzene groups in a linear molecule are exposed to UV light, they may undergo cis-trans isomerizations, resulting in a reversible transition to a bent or V-shaped conformation. Molecular hinges revolve around a stiff axis, such as a double bond or aromatic ring, in a crank-like action. However, macrocyclic molecular hinges with clamp-like processes have been developed as well.

Biological

Cells include the most complicated macromolecular machinery, which are generally multi-protein complexes. [57] Motor proteins such as myosin, which is responsible for muscle contraction, kinesin, which moves cargo inside cells away from the nucleus along microtubules, and dynein, which moves cargo inside cells towards the nucleus and is responsible for motile cilia and flagella axonemal beating, are all examples of biological machines.

"The [motile cilium] is, in effect, a nanomachine made up of over 600 proteins in molecular complexes, many of which also serve as nanomachines on their own... Flexible linkers allow mobile protein domains to recruit binding partners and produce long-range allostery through protein domain dynamics." Other biological machinery are in charge of energy generation, such as ATP synthase, which uses energy from proton gradients across membranes to power a turbine-like motion that produces ATP, a cell's energy currency. Other machineries involved in gene expression include DNA polymerases for DNA replication, RNA polymerases for mRNA production, the spliceosome for intron removal, and the ribosome for protein synthesis. These devices, as well as their nanoscale dynamics, are significantly more complicated than any molecular machines that have ever been created intentionally.

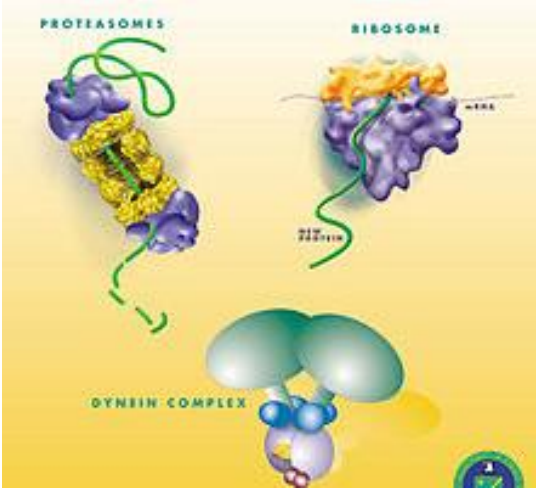

Figure SC-AI-SRB- 6: Some biological molecular machines

These biological devices might be useful in nanomedicine. They may, for example, be used to detect and kill cancer cells. Molecular nanotechnology is a speculative area of nanotechnology concerned with the idea of constructing molecular assemblers, biological machines capable of rearranging matter at the molecular or atomic level. These nanorobots would be used in nanomedicine to repair or detect damages and infections after being implanted into the body. Molecular nanotechnology is a highly speculative field that aims to

predict what kinds of breakthroughs nanotechnology could produce and to suggest a research agenda for the future. Molecular nanotechnology's planned elements, such as molecular assemblers and nanorobots, are well beyond present capabilities.

Research

These biological devices might be useful in nanomedicine. They may, for example, be used to detect and kill cancer cells. Molecular nanotechnology is a speculative area of nanotechnology concerned with the idea of constructing molecular assemblers, biological machines capable of rearranging matter at the molecular or atomic level. These nanorobots would be used in nanomedicine to repair or detect damages and infections after being implanted into the body. Molecular nanotechnology is a highly speculative field that aims to predict what kinds of breakthroughs nanotechnology could produce and to suggest a research agenda for the future.

Transport at the molecular level, manipulation of nanostructures and chemical systems, high density solid-state data processing, and molecular prosthetics are some prospective uses of molecular machines, albeit they are presently not viable. Before molecular machines can be employed in practice, several basic obstacles must be addressed, including autonomous operation, machine complexity, machine synthesis stability, and working circumstances.

NOTE! For more information about Artificial Molecular Machine, click the following link: https://www.usb.ac.ir/FileStaff/6743_2020-2-29-12-2-34.pdf

Sample Module Activities

Activity 1: Group Presentation

Research a particular type of Molecular Machine component that has been discovered and explain how it has a signification application.

THEMA: ROBOTICS

Introduction

Robotics is a field that combines science, engineering, and technology to create machines called robots that replace (or mimic) human actions.

Robots were originally designed to perform repetitive activities (such as making vehicles on an assembly line), but they have since evolved to accomplish duties such as fighting fires, cleaning homes, and aiding with extremely complex procedures. Each robot has a different amount of autonomy, ranging from fully-autonomous bots that accomplish activities without any external influences to human-controlled bots that carry out tasks that a human has complete control over.

While the field of robotics as a whole is growing, there are several features that all robots share:

- Every robot is made up of some form of mechanical component. A robot's mechanical aspect aids it in completing duties in the environment for which it was created.
- Robots require electrical components to manage and power the gear. For example, the Mars 2020 Rover's wheels are independently motorized and built of titanium tubing to help it firmly grasp the hard terrain of the red planet. A huge majority of robots, in essence, require an electric current (for example, from a battery).
- At least some level of computer programming can be found in robots. A robot would be little more than a piece of simple hardware if it didn't have a set of instructions directing it what to do. A robot's ability to know when and how to do a task is enhanced by programming it.

As artificial intelligence and software advance, we're bound to see the robotics industry's promise sooner rather than later. Robots will continue to become smarter, more adaptable, more energy efficient in the near future as these technologies progress. They'll also be a key focus in smart factories, where they'll tackle increasingly challenging difficulties and contribute to the security of global supply networks.

MODULE 12.1: CHEMISTRY MEETS ROBOTS

5 Weeks

This module introduce focuses on the concept of building and programming robots. Robots have a huge role in chemistry, particularly analytical work. Here, students will design and program a robot to carry out an analytical chemistry task. It aims to shows students the application link of chemistry with other branches, such as technology.

This module is all about thinking and working collaboratively. The The students build the robots themselves using Lego Mindstorms robotics kits, and then equip them with suitable sensors to measure the temperature and pH of a liquid. **This module is more or less a "Project-Based" type lesson.**

Topic 1: Acidity Theories (Recall)

Overview:

Acids and bases have been defined in a variety of ways over the years. Several scientists have developed several definitions to classify acids and bases, with some conceptions being relatively limited and others being rather broad. Acids and bases may be found in almost every aspect of our everyday lives. Except for water, every liquid we used had acid and basic qualities, such as vinegar (contains acetic acid), soft drinks (contains carbonic acid), buttermilk (contains lactic acid), and soap (contains lactic acid) (contains base). The first definitions were based on how they tasted and how they interacted with other drugs.

Acids

Acids have a sour taste, a pungent odor, are caustic, have a pH of less than 7, and turn blue litmus red. When acid combines with alkali, it produces salt and water, which is known as the neutralization reaction. The reactants are more acidic or basic, whereas the products are less acidic or basic. When it comes into contact with metals, it creates H2. The reaction of sodium hydroxide (base) with hydrochloric acid, for example, produces sodium chloride (salt) and water.

$$NaOH\ (aq) + HCl\ (aq) \xrightarrow{\text{Neutralization}} NaCl\ (aq) + H_2O\ (l)$$

Factors affecting acidic strength

The strength of acids and bases depends on following factors:

- Polarity of the molecule and strength of H—A bond
- Electro negativity
- Size

Polarity of the molecule and strength of H—A bond

As the polarity of the molecule rises, the electron density of the hydrogen atom decreases, and the molecule becomes H+ (proton). The stronger the positive charge on the hydrogen atom, the weaker the H-A bond and the lower the energy required to break it. The proton will then dissociate readily in the solution. As a result, the powerful acid will be used.

$$H - A \xrightarrow{\text{water}} H_3O^+ + A^-\ \text{(A is more electronegative than H)}$$

<u>Key points</u>

When comparing the acidic strength of elements in the same row, the polarity of the H-A bond should take precedence. When comparing the acidic strength of elements in the same periodic table group, the strength of the H-A bond takes precedence.

- **Electronegativity -** It is more acidic when hydrogen is attached to a more electronegative atom. For instance, hydrogen bound to oxygen (E.N = 3.5) is more acidic than hydrogen bound to nitrogen (E.N = 3.0), which is less electronegative than oxygen.

- **Size -** The size of "A" atom affects the acidity of acidic strength. As the size of the atom increases, the bond becomes weaker and acidic strength increases.

- **Hybridization -** Hybridization plays an important role in determining the acidic strength. As the hybridization moves from sp^3 to sp, the "s" character increases, so acidic strength increases.

Bases

Bases are substances that have a bitter taste, are odorless, turn red litmus blue when exposed to acid, have a pH greater than 7, and become less alkaline when exposed to acid. These are less reactive and aggressive than acids. For example, sodium hydroxide (NaOH), lithium hydroxide (LiOH), potassium hydroxide (KOH), and so on.

These are the general properties of acids or bases, but not true for every single acid or base. There are some important concepts:

- Arrhenius acid-base theory
- Lewis acid-base concept
- Bronsted-Lowry concept
- Lux-flood concept
- Solvent-system concept

The Arrhenius acid-base theory (the water-ion system)

Svante Arrhenius of Sweden devised the Arrhenius acid-base hypothesis. It was the first time the acid-base principle was approached in a contemporary way. This theory is straightforward and practical. Acids are the compounds that raise the concentration of H^+ or proton in aqueous solution, according to the Arrhenius hypothesis. The released H^+ ion or proton is not a free-floating proton; instead, it forms hydronium ion (H_3O^+) when it comes into contact with the water molecule. HCl (hydrochloric acid), H2SO4 (sulphuric acid), HNO_3 (nitric acid), and other Arrhenius acids are common examples, as given in Table 6.

$$HCl\ (aq) \longrightarrow H^+\ (aq) + Cl^-\ (aq)$$

Table 1

Arrhenius acid formula	Name
$HClO_3$	Chloric acid
HNO_3	Nitric acid
$HClO_4$	Perchloric acid
H_3PO_4	Phosphoric acid
H_2SO_4	Sulphuric acid
H_2SO_3	Sulfurous acid
HCl	Hydrochloric acid
CH_3COOH	Acetic acid
HBr	Hydrobromic acid

Some Arrhenius acids.

When it is dissolved in water, then:

$$HCl\ (aq) \longrightarrow H_3O^+\ (aq) + Cl^-\ (aq)$$

$$HNO_3\ (aq) \xrightarrow{\text{Water}} H_3O^+\ (aq) + NO_3^-\ (aq)$$

Monoprotic acids, such as HNO_3, HCl, and others, dissociate into one proton. Polyprotic acids are acids with more than one hydrogen atom that produce more than one H+ ion upon dissociation, such as H_2SO_4, H_3PO_4, and others. Polyprotic acids do not have to be stronger than monoprotic acids.

$$H_2SO_4(aq) \xrightarrow{\text{Water}} H^+\ (aq) + HSO_4^-\ (aq)$$

$$HSO_4^-(aq) \xrightarrow{\text{Water}} H^+\ (aq) + SO_4^{2-}\ (aq)$$

$$\text{or}\quad 2H_2SO_4\ (aq) \xrightarrow{\text{Water}} 2H^+\ (aq) + SO_4^{2-}\ (aq)$$

Similarly, Arrhenius bases are compounds with at least one OH ion in the formula that raise the concentration of OH or hydroxide ion in aqueous solution. NaOH (sodium hydroxide), KOH (potassium hydroxide), $Ca(OH)_2$ (calcium hydroxide), $Mg(OH)_2$ (magnesium hydroxide), NH_4OH (ammonium hydroxide), and other Arrhenius bases are frequent examples, as given in Table 7.

Table 2

Arrhenius base	Name
NaOH	Sodium hydroxide
NH_4OH	Ammonium hydroxide
KOH	Potassium hydroxide
$Mg(OH)_2$	Magnesium hydroxide
$Ca(OH)_2$	Calcium hydroxide
$Al(OH)_3$	Aluminum hydroxide

Some Arrhenius bases.

When sodium hydroxide is dissolved in water, it dissociates completely into the ions Na_+ and OH, increasing the concentration of hydroxide ions in the solution.

$$NaOH\ (aq) \xrightarrow{\text{Water}} Na^+\ (aq) + OH^-\ (aq)$$

$$KOH\ (aq) \xrightarrow{\text{Water}} K^+\ (aq) + OH^-\ (aq)$$

$$Ca(OH)_2\ (aq) \xrightarrow{\text{Water}} Ca^{2+}\ (aq) + 2OH^-\ (aq)$$

$$Mg(OH)_2\ (aq) \xrightarrow{\text{Water}} Mg^{2+}\ (aq) + 2OH^-(aq)$$

$$NH_4OH\ (aq) \xrightarrow{\text{Water}} NH_4\ (aq) + OH^-\ (aq)$$

Neutralization reaction

The neutralization reaction occurs when Arrhenius acid and Arrhenius base react to produce salt and water as a result. Consider the following scenario:

$$HCl + NaOH \xrightarrow{\text{Neutralisation}} NaCl + H_2O$$

Strong acids are those that are totally ionized in aqueous solution, such as HCl, HNO_3, H_2SO_4, and so on.

$$HCl\ (aq) \xrightarrow{\text{Water}} H_3O^+ + Cl^-$$

Hydrochloric acid is an extremely powerful acid. The hydronium ion and chloride ions are generated when it dissociates into water. Although chloride ions are a weak base, their basicity does not make the solution basic because acidity overwhelms their basicity. Hydronium ion is formed when H+ ions mix with water molecules. The concentration of hydronium ions generated in strong acids is equal to the concentration of the acid, but the concentration of hydronium ions in weak acids is always smaller than the concentration of hydrogen ions.

$$CH_3COOH\ (aq) \xrightarrow{\text{Water}} CH_3COO^- + H^+$$

The concentration of hydronium ion in weak acids is always smaller than the concentration of acid.

Strong bases are those that are entirely ionized in aqueous solution, such as NaOH, KOH, etc., whereas weak bases are those that are slightly ionized in aqueous solution, such as ammonium hydroxide (NH_4OH), calcium hydroxide ($Ca(OH)_2$), and so on.

Strong acids/bases do not have to be concentrated, and weak acids/bases do not have to be dilute. Because a substance's dissociation is independent of its concentration.

Utility of Arrhenius concept

Many phenomena, such as acid and basic strength, salt hydrolysis, and neutralization, are explained by this theory.

Hydrogen ion (H^+) or hydronium ion (H_3O^+)

The hydrogen ion H+ is generated when an electron is removed from a hydrogen atom. It is a particularly reactive ion. In aqueous solution, however, this H+ ion does not exist. It creates hydronium ion (H_3O^+) when it combines with water molecules in an aqueous media. Water is a polar molecule, meaning it can attract hydrogen ions (H^+). Water comprises hydrogen and oxygen, with oxygen (EN = 3.5) being more electronegative, attracting electron density to it and causing the molecule to have a partial negative charge. It has the potential to attract the positively charged hydrogen ion (H^+) and create hydronium ion (H_3O^+) due to its partial negative charge. In comparison to hydrogen ions, hydronium ions are more stable.

$$H_2O\ (l) \rightleftharpoons H^+\ (aq) + OH^-\ (aq)$$

The hydronium ion is a critical component of chemical reactions in aqueous solutions. The protonation of water produces it.

Concept of pH

The pH of solution can be determined by the concentration of hydronium ion.

$pH = -\log (H_3O^+)$

The pH of pure water may be calculated using this equation. Pure water has a pH of 7, which is considered to be neutral. Depending on the quantity of hydronium ion in the solution, it is acidic or basic.

Figure SC-SRB-107 shows the following:

- If the concentration of the hydronium ion in the solution increases means more than 10^{-7} mol/l, pH increases that makes the solution more acidic.
- If the concentration of the hydronium ion in the solution decreases means $<10^{-7}$ mol/l, pH decreases that makes the solution more basic.

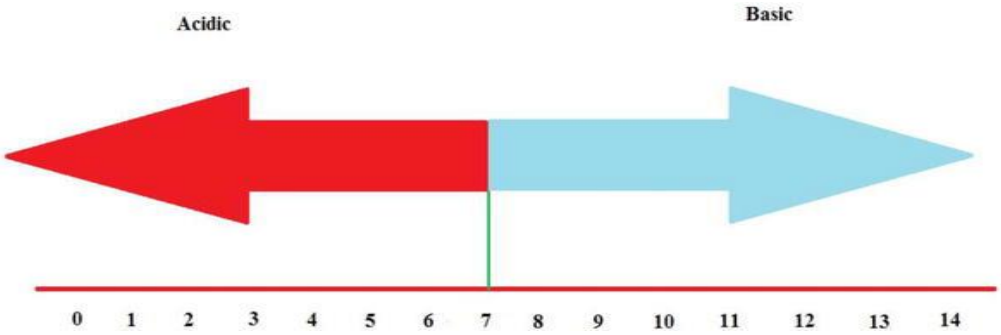

Figure SC-R-SRB- 1: Acidic (below 7) and Basic (above 7)

Amphoteric nature of water

The term amphoteric comes from the Greek word "amphi," which means "both" (acid and base). Amphoteric compounds have the ability to behave as both an acid and a base. For instance, H_2O (water).

$$H_2O\ (l) \rightleftharpoons H^+\ (aq) + OH^-\ (aq)$$

It ionizes into H+ and OH (hydroxide) ions upon dissociation. The presence of H+ indicates the existence of an acid, while the presence of the OH ion indicates the presence of a base. Due to the fact that water is a neutral molecule. As a result, it dissociates into H+ and OH ions in equal amounts.

The acid-base hypothesis of Arrhenius states:

Because most acid-base chemical reactions take occur in the presence of water, the amphoteric characteristic of water is critical. Water is an essential amphoteric molecule that may function as an Arrhenius acid or a base.

Auto-ionization of water;

$$H_2O \underset{}{\overset{H_2O}{\rightleftharpoons}} H_3O^+ (aq) + OH^- (aq)$$

The H^+ ion (a bare proton) does not exist in the solution, it forms hydronium ions by hydrogen bonding with nearest water molecule. Many books refers the "concentration of hydrogen ions" which is not correct. Because there are no H^+ ions, only hydronium ions in the solution. Technically, the number of hydronium ions formed is equal to the number of hydrogen ion. So, both can be used.

Advantages of Arrhenius theory

This theory is used to explains:

- Strength of acid and bases

The strength of Arrhenius acid and Arrhenius base can be determined by the extent to which it dissociate to give H^+ ion or hydroxide ion [5].

- The properties of acids and bases in aqueous medium.
- Neutralization of acid by reaction with base

Limitation of Arrhenius acid-base theory

(1) This is the most limiting of the three hypotheses. The solution medium should be aqueous, and the acid or base should create hydrogen ion (H+) or hydroxide ion (OH) upon dissociation with water, according to this hypothesis. When the material is dissolved in water, it is referred to as Arrhenius acid or Arrhenius base. When HNO3 is dissolved in aqueous solution, it is referred to as Arrhenius acid. When it is dissolved in another solvent, such as benzene, it does not dissociate. This contradicts the Arrhenius hypothesis.

(2) Because Arrhenius theory defined acid-base behavior in terms of aqueous solutions, it cannot be applied to non-aqueous or gaseous processes.

(3) According to Arrhenius' hypothesis, the result produces salts that are neither acidic nor basic. As a result, without the existence of ions, this hypothesis cannot explain the neutralization reaction. When acetic acid (weak acid) interacts with sodium hydroxide (strong base), the resultant solution is basic. Arrhenius, on the other hand, does not describe this idea.

(4) For acids and bases, the Arrhenius hypothesis only applies to compounds of the formula HA or BOH. Some acids, such as AlCl3, $CuSO_4$, CO_2, and SO_2, are not represented by the HA formula, hence this hypothesis cannot explain their acidic behavior. Similarly,

several bases, such as Na_2CO_3, NH_3, and others, are not represented by the BOH formula, hence this theory cannot describe their basic behavior.

Bronsted-Lowry theory

We previously learnt the Arrhenius acid-base theory, which gave us an excellent foundation in acid-base chemistry but had certain limits and flaws. Following this notion, a Danish chemist called Johannes Nicolaus Bronsted and a British scientist named Thomas Martin Lowry presented a new definition of acid-base based on a compound's ability to give or take protons. Bronsted-Lowry theory, also known as Proton theory of acid and base, is the name given to this theory. Bronsted-Lowry theory, also known as Proton theory of acid and base, is the name given to this theory.

An acid, according to the Bronsted-Lowry idea, is defined as Bronsted-Lowry acid has the ability to give a proton to another substance. The term "base" refers to the foundation of a structure. Bronsted-Lowry base that can accept a proton from another source. It may be deduced from this that when an acid combines with a base, the proton is transferred from one chemical species to the other.

- Bronsted-Lowry acid-Hydrogen ion (Proton) donor.
- Bronsted-Lowry base-Hydrogen ion (Proton) acceptor.

Conjugate acid-base pairs

- Conjugate acid: It forms when a base accepts proton.
- Conjugate base: It forms when an acid donates proton.

Note: If an acid is strong, the conjugate base will be weaker and if the base is strong, the conjugate acid will be weak.

Consider the following chemical reaction:

$$HCl\ (aq) + NH_3\ (aq) \rightleftharpoons NH_4^+\ (aq) + Cl^-\ (aq)$$

Hydrogen Chloride Ammonia Ammoniumion Chlorideion

Because it donates a proton to NH_3, HCl is an acid in this reaction. As a result, HCl acts as a Bronsted-Lowry acid, whereas NH_3 has a single pair of electrons that may take protons. As a result, NH_3 serves as a Bronsted-Lowry base. This reaction is also reversible. The ammonium ion interacts with the chloride ion in a reversible reaction, forming ammonia (NH_3) and hydrogen chloride (HCl). The ammonium ion is giving a proton in this scenario, which is known as conjugate acid. The chloride ion (Cl) accepts a proton, which is known as conjugate base.

There are two conjugate pairs—conjugate pair 1 and conjugate pair 2.

(1) Conjugate pair 1: HCl and Cl^-
(2) Conjugate pair 2: NH_3 and NH_4^+

The ammonium ion (NH_4^+) is a conjugate acid of basic ammonia, and the chloride ion (Cl) is a conjugate base of acid hydrogen chloride, according to that equation.

Note: The interaction between HCl and NH3 is not considered an acid-base reaction by Arrhenius since neither of these species produces H+ or OH ions in water.

Examples of Bronsted-Lowry acids and bases

$$HNO_3\ (aq) + H_2O\ (l) \longrightarrow H_3O^+\ (aq) + NO_3^-\ (aq)$$

The nitric acid transfers a proton to the water in this process, making it a Bronsted-Lowry acid. Water acts as a Bronsted-Lowry base because it accepts a proton from nitric acid. The arrow in this reaction is exclusively drawn to the right, indicating that the reaction favors the creation of products.

$$NH_3\ (aq) + H_2O\ (l) \longrightarrow NH_4^+\ (aq) + OH^-\ (aq)$$

Water loses its proton in this reaction, turns into hydroxide (OH), and gives its proton to ammonia. As a result, water acts as a Bronsted-Lowry acid. Ammonia takes a proton from the water and generates the ion ammonium (NH_4^+). As a result, ammonia serves as a Bronsted-Lowry base.

We may deduce from the preceding two reactions that water is amphoteric, which means it can behave as both a Bronsted-Lowry acid and a Bronsted-Lowry base.

Advantages of Bronsted-Lowry theory

(1) This theory may explain acid-base behavior in both aqueous and non-aqueous environments.
(2) It explains the basic nature of chemicals like NH3, CaO, and Na2CO3, which do not include an OH group yet are not considered bases according to Arrhenius theory.
(3) It explains the acidic nature of chemicals such as CO2, SO2, and others that lack a hydrogen ion group yet are not acids according to the Arrhenius hypothesis.
(4) This hypothesis also explains ionic species' acid-base behavior.

Disadvantages of Bronsted-Lowry theory

(1) The Bronsted-Lowry hypothesis states that the same chemical can behave as an acid in one reaction and a base in another. As a result, predicting the exact acid or base in a reaction can be tricky at times.
(2) This hypothesis fails to account for acidic, basic, and amphoteric gaseous molecules.
(3) This explanation does not account for the action of acids such as BF3, AlCl3, BCl3, and others, which do not lose or donate protons.
(4) In the absence of a solvent, this hypothesis does not explain interactions between acidic oxides (CO2, SO2, SO3) and basic oxides (CaO, MgO, BrO).

Relation between Arrhenius theory and Bronsted-Lowry theory

These two ideas are not mutually exclusive; in fact, the Bronsted-Lowry hypothesis is superior than the Arrhenius theory.

Acid is a chemical that creates hydrogen ions in water, according to the Arrhenius hypothesis. Base is a chemical that creates the hydroxide ion in water.

An acid is a proton donor, whereas a base is a proton acceptor, according to Bronsted-Lowry theory.

$$HCl\ (g) + H_2O\ (l) \longrightarrow H_3O + (aq) + Cl\text{-}\ (aq)$$

Hydrochloric acid is an acid according to Arrhenius theory because it produces hydrogen ions in water, while according to Bronsted-Lowry theory, it is an acid because it contributes a proton to the water molecule. Water acts as a basis when both ideas are observed. As a result, we can observe that both ideas are remarkably similar.

Actually, the Arrhenius hypothesis is only applicable to aqueous solutions. It doesn't explain the acid's gaseous nature.

Lewis acid-base theory

The Bronsted-Lowry hypothesis, which we previously looked at, was a nice place to start with acid-base chemistry. Bronsted-Lowry theory was founded on proton transfer from one chemical species to another. However, there are certain limits to this idea. G.N. Lewis, a UC Berkeley chemist, suggested a novel acid-base hypothesis in 1923 based on electron transport. Because it describes acid-base behavior in molecules that do not contain hydrogen ions or in non-aqueous media, this theory is more sophisticated and versatile than Bronsted-Lowry.

Lewis acid

According to this hypothesis, an acid is a material that can accept a non-bonding pair of electrons and is referred to as a Lewis acid. Electrophile or electron deficient species are terms used to describe them.

<u>Lewis acid: characteristics</u>

- Lewis acid-electron-pair acceptor.
- Lewis acid should have a vacant or empty orbital.
- All cations (Na^+, Cu^{2+}, Fe^{3+}) are Lewis acids because they have capability to accept a pair of electrons but all Lewis acids are not cations.

$$Fe^{3+} + 6H_2O \longrightarrow [Fe(H_2O)_6]^{3+}$$

Metal cation having positive charge and empty orbital

Lone pair present on oxygen

More is the positive charge on the metal, more is the acidic character. Fe^{3+} is good Lewis acid than Na^+.

- The ion, molecule or an atom which has incomplete octet of electrons are also Lewis acids.

For example: BF_3.

Here, you can see that the central atom boron has six electrons in its outermost shell. So, it has ability to accept more electrons due to the presence of an empty orbital and hence, act as Lewis acid.

$$BF_3 + F^- \longrightarrow BF_4^-$$

- Lewis acids are defined as molecules with a central atom that has more than eight electrons (SiF_4, $SiBr_4$).
- Lewis acids include molecules such as CO_2, SO_2, and others. Multiple bonds are formed between atoms with varied electronegativity in these compounds. When it comes to transition metal ions, the metal with the highest electronegativity produces the strongest Lewis acids.
- Electron-poor: the system is sometimes referred to as a Lewis acid, such as $[CH_2{=}CH]^+$.

Lewis base

A base, sometimes known as a Lewis base, is a material that has the ability to give electrons. They're also known as electron-rich species or nucleophiles.

Lewis base: characteristics

(1) Lewis donor of base-electron pairs
(2) All metal anions (F, Cl, Br, and I) are Lewis bases since they can donate electrons, but not all Lewis bases are anions.
(3) An ion, molecule, or atom with a lone pair of electrons is sometimes referred to as a Lewis base.
(4) Lewis bases, such as benzene, ethene, and other electron-rich systems, are also examined.
(5) By raising the electron density, the Lewis base's strength can be raised..

When a Lewis acid combines with a Lewis base, the acid utilizes its lowest unoccupied molecular orbital (LUMO), while the base uses its highest occupied molecular orbital (HUMO) to form a bonded molecular orbital. LUMO and HUMO are found in both Lewis acids and bases, however HUMO is always regarded a base while LUMO is always considered an acid.

$$\text{HOMO} + \text{LUMO} \longrightarrow \text{Bonding MO}$$

Example of Lewis acid-base

A simplest example of Lewis acid-base is shown by a chemical reaction:

$$Na^+ + Cl^- \longrightarrow Na - Cl$$

Because it possesses lone pairs of electrons, the chloride ion functions as a Lewis base in this reaction, whereas the sodium ion has a positive charge and so works as a Lewis acid.

Neutralization reaction between Lewis acid and Lewis base

When a Lewis acid combines with a Lewis base, a Lewis acid-base reaction occurs, in which the Lewis base molecule donates its electron pair to the vacant orbital of the acid, forming a Lewis acid-base adduct, as illustrated in Figure SC-R-SRB-2. Lewis acid and Lewis base produce a covalent coordinating bond in the adduct generated. According to the preceding explanation, the Lewis acid has a low electron density center and the Lewis base has a high electron density center.

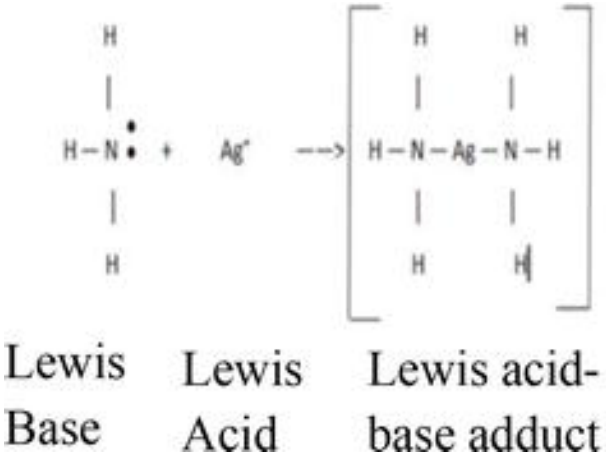

Figure SC-R-SRB- 2: Acid-base neutralization.

The two ammonia molecules react with the silver ion in this process. Because ammonia possesses a lone pair of electrons, it may transfer those electrons and so behave as a Lewis base. Silver's positive charge indicates its electrophilic character, which implies it can take pairs of electrons and serve as a Lewis acid (by Lewis definition).

It's also worth noting that when a Lewis acid combines with a Lewis base, none of these atoms' oxidation numbers change.

Limitations of Lewis acid-base theory

(1) This hypothesis is unable to explain why the covalent coordination link is absent from all acid-base reactions.
(2) Because some acids, such as hydrogen chloride (HCl) and sulfuric acid (H2SO4), can not form the covalent coordination link with bases, this hypothesis is unable to explain their behavior. As a result, they are not classified as Lewis acids.
(3) This hypothesis is unable to explain why the creation of coordination bonds is a gradual process whereas acid-base reactions are rapid.
(4) This hypothesis is unable to explain the idea of acid and base relative strength.
(5) The catalytic activity of some Lewis acids is not explained by this idea.

Relation between Lewis acid-base theory and Arrhenius theory

All Arrhenius acids and Bronsted Lowry acids are Lewis acids but reverse is not true.

Conclusion

Acids and bases play a critical role in modern civilization and our daily lives. They may be found all over our bodies and in our environment. The theory outlined in this topic has provided

us with all of the fundamental knowledge about acids and bases. We covered all three basic theories of acid-base chemistry in this topic: Arrhenius theory, Bronsted-Lowry theory, and Lewis acid-base theory. Acids and bases have an important function in medicine. It is now possible to treat illnesses with better drugs thanks to this approach, which is based on a comprehensive understanding of acids and bases. For example, when the quantity of hydrogen ions in human blood rises, acidity rises, resulting in physical weakness. To balance the acidity, the body should stay alkaline by digesting foods that create alkali in the body.

Without the knowledge of acids and bases, our lives would undoubtedly be different than they are now. Without this information, many of the goods we use today would be useless.

Topic 2: Robotics (Basic)

Robotics

Robotics is a branch of Artificial Intelligence (AI) that combines electrical, mechanical, and computer science engineering to build, design, and maintain robots.

Robotics is the science of creating or engineering robots for use. The goal of robotics is to create a useful robot.

- Electrical components in the robots provide power and control of the machines.
- They have a mechanical construction, shape, or form that is intended to perform a certain duty.
- It has a computer software that determines what a robot does, when it does it, and how it does it.

Components of Robot

key components of robotics are:

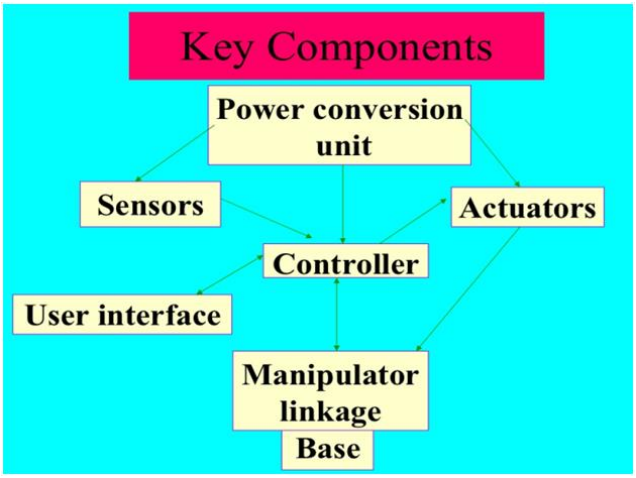

- Power Sources - The robot's operating power is supplied by batteries, hydraulic, solar, or pneumatic power sources.

- Actuators - The energy conversion device within a robot is called an actuator. Actuators' primary role is to transform energy into movement.

- DC/AC electric motors—Electric motors are electromechanical components that transform electrical energy into mechanical energy. Motors are utilized in robots to provide rotational movement.

- Sensors give real-time information about the work environment. Robots are outfitted with a tactile sensor that mimics the mechanical features of human fingerprint touch receptors, as well as a vision sensor for computing depth in the surroundings.

- Controller - A controller is a component of a robot that coordinates all mechanical system motion. It also gathers information from the nearby surroundings via a variety of sensors. A

microprocessor is at the core of the robot's controller, which is coupled to the input/output and monitoring devices. The motion control system, which consists of multiple controllers, actuators, and amplifiers, is activated when the controller issues a command.

Robot Locomotion

The term "locomotion" refers to the process of traveling from one location to another. Robot locomotion is the mechanism that allows a robot to move around in its surroundings. There are several different forms of locomotion:-Wheeled

- Legged
- Tracked slip/skid
- Combination of legged and wheeled locomotion

Legged locomotion

- There are one, two, four, and six legs to choose from. Leg coordination is essential for mobility when a robot has several legs.
- When displaying leap, hop, walk, trot, climb up or down, etc., legged movement requires more force.
- It takes a greater number of motors to complete a movement. It is suitable for both difficult and smooth terrain, where an uneven or too smooth surface requires greater operational power. Because of concerns with stability, it is a bit difficult to implement.

Depending on the number of robot legs, the total number of different gaits (a periodic series of release and lift events for each of the total legs) a robot may traverse. The number of potential occurrences for a robot with K legs is,

$$N = (2K - 1)!$$

In case of a two-legged robot (K=2), therefore the number of possible events is

$$N = (2K - 1)!$$

$$N = (2 \times 2 - 1)!$$

$$N = 3!$$

$$N = 6$$

Hence, there are six possible different events:

- Lifting the Right leg
- Lifting the Left leg
- Releasing the right leg
- Releasing the left leg
- Releasing both the legs together
- Lifting both the legs together

There are 5040 potential occurrences when K=4 legs are used. As a result, the number of legs on a robot determines its complexity. The complexity of a robotic system grows as the number of legs on a robot increases.

Wheeled Locomotion

A movement can be accomplished with a less number of motors. It is a bit easier to execute because there are less stability difficulties when there are more wheels. When compared to legged movement, it uses less energy.

- The castor wheel revolves around the offset steering joint and wheel axle.
- Standard wheel - It revolves around the contact and the axle of the wheel.
- Ball or spherical wheel - Due to its architectural intricacy, this wheel is technically challenging to execute. It's an Omni-directional wheel that can only travel in one direction.
- Swedish 45 and Swedish 90 wheels - An Omni-wheel that revolves around the contact point, the wheel axle, and the rollers.

Slip/Skid Locomotion

Vehicles in Slip/Skid locomotion employ tracks similar to those seen on a tank. Moving rails with differing speeds in the same or opposing direction control the robot. Because of the high contact area between the ground and the track, it provides stability.

Types of Robots

1) Mobile Robots

Locomotion is the ability of mobile robots to move from one area to another. It is a self-navigating machine that can navigate in an uncontrolled environment without the need of physical or electromechanical guidance mechanisms. There are two types of mobile robots:

(a) Rolling robots - To travel around, rolling robots require wheels. They can search simply and rapidly. They are, however, only helpful in flat terrain.

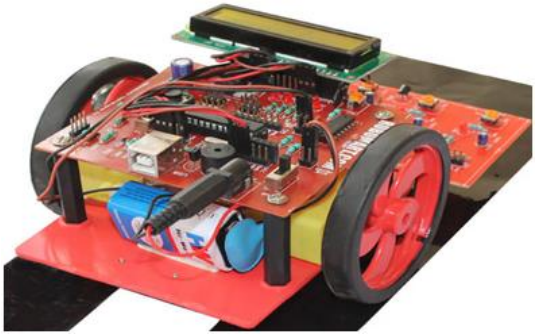

(b) Walking robots - In situations when the ground is rough, robots with legs are typically deployed. The majority of walking robots have four legs.

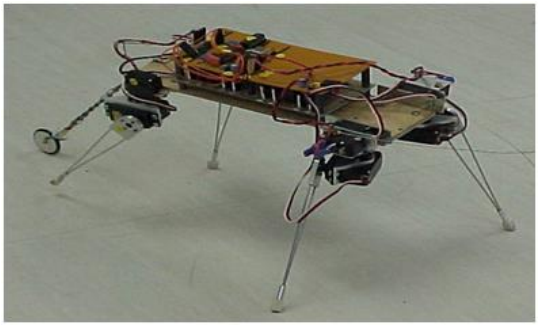

2) Industrial Robots

Industrial robots do the same jobs over and over again without ever moving. These robots are employed in sectors where monotonous and repetitive duties are required.

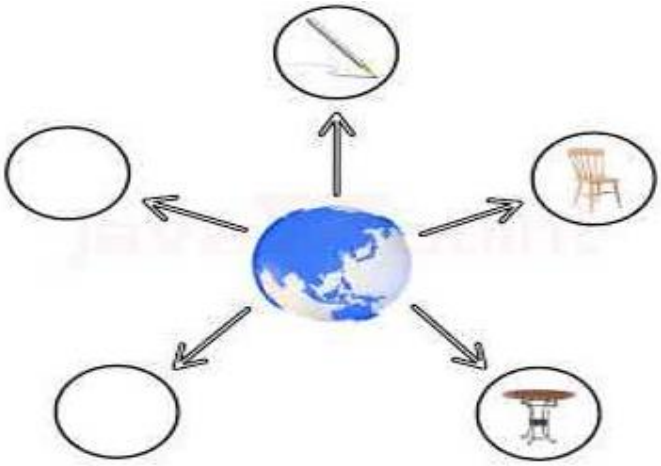

An industrial robot never tired, it will perform their works day and night without ever complaining.

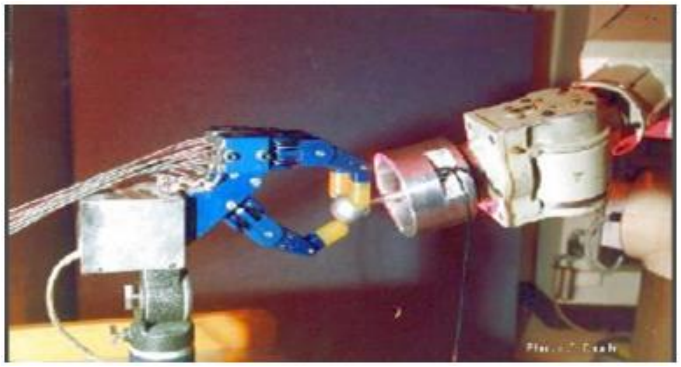

3) Autonomous Robots

Self-contained autonomous robots are self-sufficient. They employ a software that allows them to choose their next course of action based on their environment. These robots frequently learn new behaviors thanks to artificial intelligence. They begin with a simple routine and then adjust it to be more successful in a task they are performing. As a result, the most effective routine will be repeated.

4) Remote Controlled Robots

Remote controlled robots are utilized to undertake difficult and unpredictable jobs that an autonomous robot would be unable to complete owing to operational unpredictability. Complicated activities are best completed by someone who have a lot of brainpower. As a result, a person can use a remote to control a robot. Humans can conduct risky jobs using remote controlled operations without having to be present at the location where the duties are performed.

Let's have a look at a NASA robot that can remotely study volcanoes:

Types of Robot Sensors

There are several types of sensors to pick from, and the features of sensors are used to determine the type of sensor that should be utilized for a certain application.

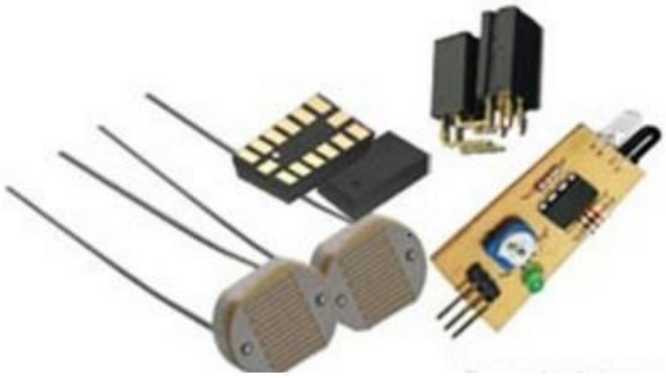

1) Light Sensor

A light sensor is a transducer that detects light and generates a voltage differential equal to the intensity of light falling on it.

Photovoltaic cells and photo resistors are the two most common light sensors used in robotics. Phototransistors and phototubes are two further types of light sensors that are rarely utilized. The following are examples of light sensors used in robotics:

1. **Photo resistor -** It is a sort of resistor that is used to detect light. The resistance of a photo resistor changes as the light intensity changes. The resistance of a photo resistor is inversely proportional to the amount of light that falls on it. A photo resistor is also known as a Light Dependent Resistor in general (LDR). Consider the following photo resistor sensor circuit diagram:

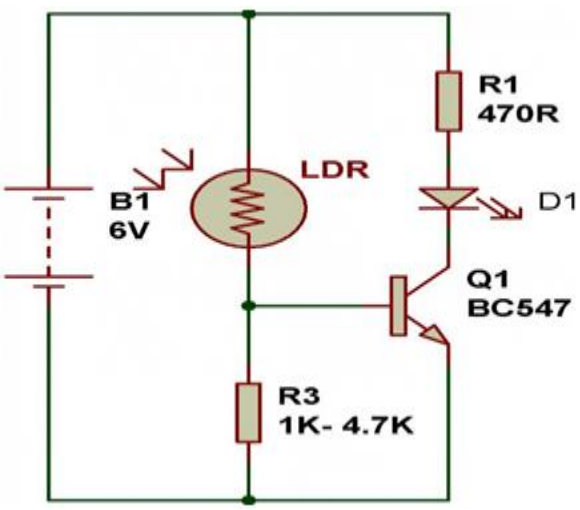

2. **Photovoltaic Cells -** Photovoltaic cells are energy conversion device used to convert solar radiation into electrical electric energy. It is used if we are planning to build a solar robot. Individually photovoltaic cells are considered as an energy source, an implementation combined with capacitors and transistors can convert this into a sensor. Consider the circuit diagram of photovoltaic cell is,

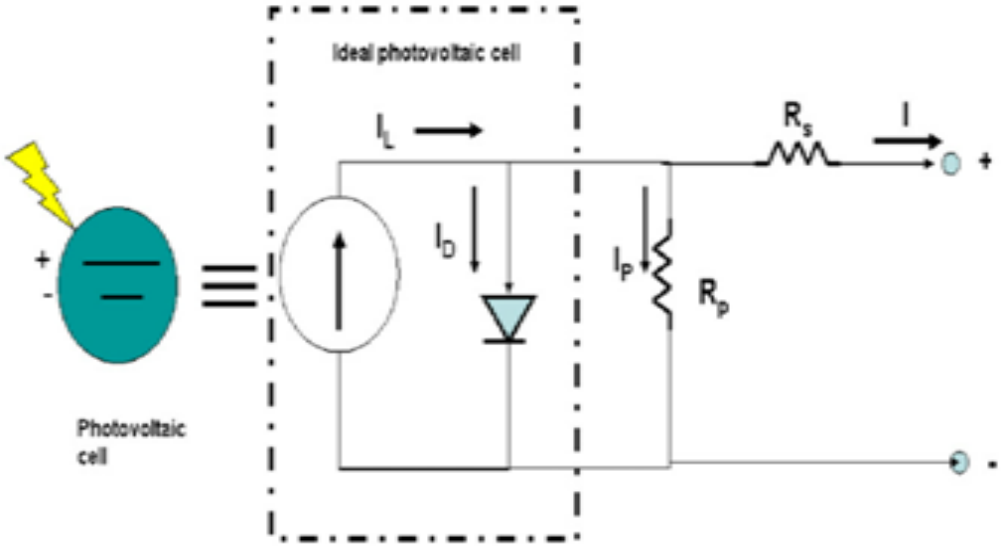

2) Proximity Sensor

Proximity sensor can detect the presence of nearby object without any physical contact. The working of a proximity sensor is simple. In proximity sensor transmitter transmits an electromagnetic radiation and receiver receives and analyzes the return signal for interruptions. Therefore the amount of light receiver receives by surrounding can be used for detecting the presence of nearby object.

Consider the types of proximity sensors used in robotics are:-

- **Infrared (IR) Transceivers -** In IR sensor LED transmit the beam of IR light and if it find an obstacle then the light is reflected back which is captured by an IR receiver. Consider the PCB board layout of IR Transceiver circuit:

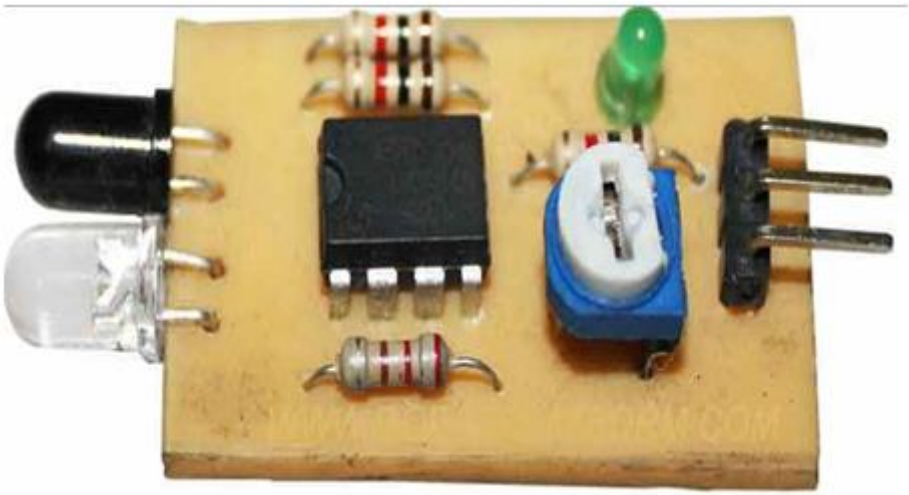

- **Ultrasonic Sensor -** In ultrasonic sensors high frequency sound waves is generated by transmitter, the received echo pulse suggests an object interruption. In general ultrasonic

sensors are used for distance measurement in robotic system. Consider the interfacing of ultrasonic sensor with Microcontroller unit:

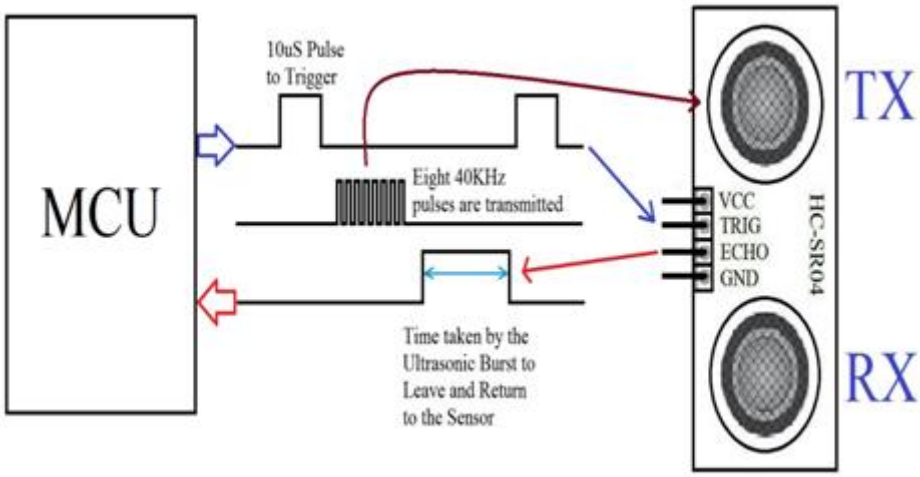

1) Sound Sensor

Sound sensors are generally a microphone used to detect sound and return a voltage equivalent to the sound level. Using sound sensor a simple robot can be designed to navigate based on the sound receives.

Implementation of sound sensors is not easy as light sensors because it generates a very small voltage difference which will be amplified to generate measurable voltage change. Consider the sound sensor based switching circuit:

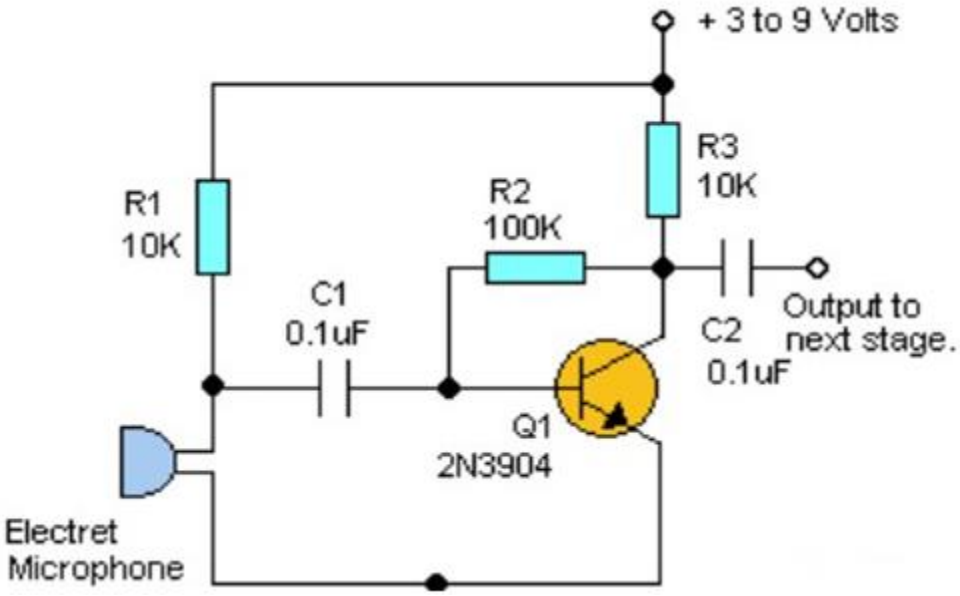

4) Temperature Sensor

Temperature sensors are used to detect changes in the ambient temperature. It is founded on the idea that for a change in temperature, a change in voltage will yield the corresponding temperature value of the environment. TMP35, TMP37, LM34, LM35, and others are some of the most often used temperature sensors ICs.

Consider the following description of the temperature sensor pin diagram:

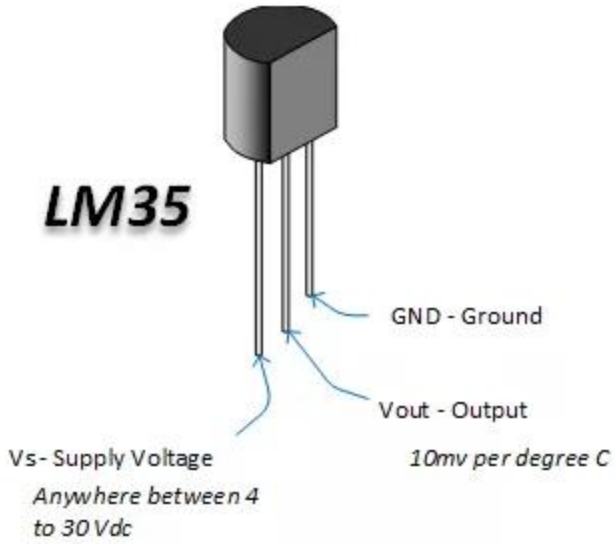

5) Acceleration Sensor

Acceleration sensor is used for measuring acceleration and tilt. An accelerometer is a device used for measuring acceleration.

The two kinds of forces which affect an accelerometer is:-

- **Frictional Force - This is the force that exists between any two items. We can tell how much the robot is tilting by sensing the gravitational force. This measurement is useful for balancing the robot or identifying whether it is moving uphill or on a level terrain.**

- **Dynamic Force - This refers to the amount of acceleration needed to move an object. The velocity/speed at which the robot is traveling is determined by measuring dynamic force with an accelerometer.**

Accelerometers are available in a variety of configurations. Always select the one that is most suited to your robot. Before choosing an accelerometer, there are a few things to think about:

(1) Sensitivity
(2) Bandwidth
(3) Output type: Analog or Digital
(4) Number of Axis: 1,2 or 3

Consider the schematic diagram of basic accelerometer:[3]

[3] Robotics Designing of PCB - javatpoint

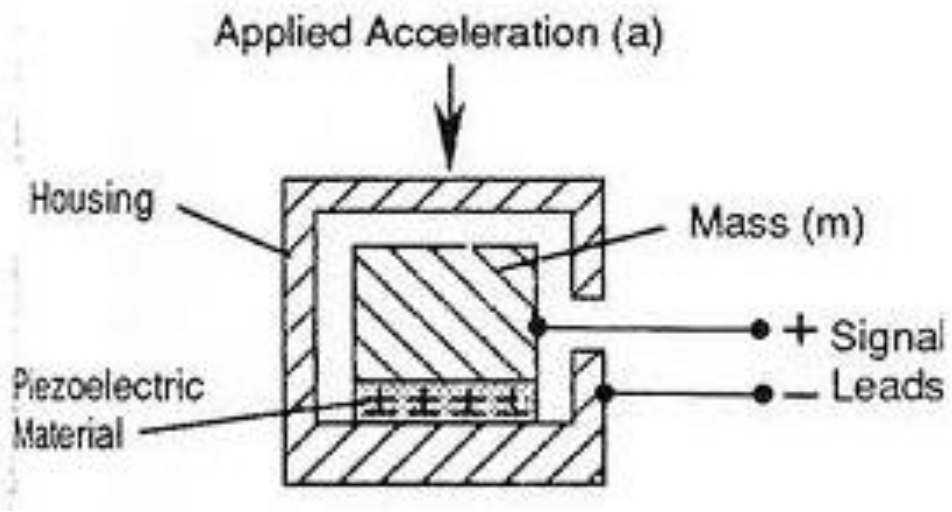

Figure 1: Basic Accelerometer (Source: [Robotics Designing of PCB - javatpoint)](#)

Topic 3: Programming a Robot

Key Points

- Robotics is the study of the design, construction, and operation of intelligent devices known as robots.
- Robot is derived from the Slavic term robota, which meaning servant.
- Operator interface, movement, effectors, programming, and perception are the primary robotics areas.
- Robot programming is the creation of a control strategy for a machine's interaction with its surroundings and achievement of its objectives.
- The Robot Operating System is a middleware – a set of software frameworks for developing robot software.
- Robot control software is a program that allows you to operate robots.
- In robotics, popular programming languages include C/C++, Python, JAVA, C# /.NET, and MATLAB, among others..[4]

What is Robotics?

Robotics is an interdisciplinary field of study that straddles science, engineering, and technology. The objective of the study is to create machines that can not only mimic human behaviors but also eventually replace people. As a result, robotics entails the creation, operation, and maintenance of intelligent devices known as robots. Aerospace, healthcare, e-commerce, space exploration, and transportation, among other industries, all benefit from such devices.

Robot is derived from the Slavic word robota, which meaning "servant." However, in his 1920 play RUR (Rossum's Universal Robots), Czech playwright Karel apek was the first to adopt the term robot.

Apek used the word to characterize factory-made persons who can be fooled for humans at the time. That sounds a lot like the present concept of androids or humanoids.

Robotics is becoming one of the most rapidly expanding fields of study. Robotics is now separated into numerous disciplines after transitioning from the Czech writer's script.

What are the Five Major Fields of Robotics?

To construct a sophisticated robot, a team of engineers' skills is required. Operator interface, mobility or locomotion, manipulators and effectors, programming, sensing and perception are the key robotics areas as a result.

1. Operator Interface

[4] Robot Programming: A Guide to Programming Your Own Robots (edgy.app)

The interaction between a robot and its human controller is referred to as the operator interface. It's the means by which a person communicates with his or her machine. A joystick controller, for example, acts as the operator interface between the gamer and the console.

2. Mobility or Locomotion

Robotics is an interdisciplinary field of study that straddles science, engineering, and technology. The objective of the study is to create machines that can not only mimic human behaviors but also eventually replace people. As a result, robotics entails the creation, operation, and maintenance of intelligent devices known as robots. Aerospace, healthcare, e-commerce, space exploration, and transportation, among other industries, all benefit from such devices.

3. Manipulators and Effectors

It refers to the distinctive feature of a machine that allows it to do specified tasks. Pushers, claws, grippers, mechanical arms, and fingers are examples of such components. Industrial robots, for example, are often equipped with two-finger grippers for moving objects.

4. Sensing and Perception

Sensing and perception are concerned with how a machine recognizes and reacts to objects in its surroundings. A robot can use this area to find out things like:

- where it is
- where it is going
- how to avoid problems

What should a robot do when it comes across an impediment, for example? Programmers feed such elements into the system to aid it in making the best judgment possible.

5. Programming

The commands that enable robots to work in a certain context are referred to as programming. It entails creating and executing a computer program to complete a certain goal. Robot programming languages now number in the thousands. We need to go a bit further to grasp how this sector of robots works.

What is Robot Programming?

The process of designing a control plan for how a machine interacts with its surroundings and achieves its goals is referred to as robot programming. It typically necessitates a rudimentary understanding of mathematics as well as the ability to program in a computer language. Python, for instance, is one of the most widely used robot programming languages today.

Python may be used to generate Robot Operating System packages in addition to creating machine learning. Let's start with the software before moving on to other programming languages.

What Software is Used to Program Robots

Robots Operating System (ROS)

The Robot Operating System is a middleware – a set of software frameworks for developing robot software. ROS offers services for a heterogeneous computer cluster, despite the fact that it is not an operating system.

These include:

- Hardware abstraction
- Low-level device control
- Implementation of commonly used functionality
- Message-passing between processes
- Package management

ROS-Industrial, for example, is an open-source project that extends ROS' capabilities to factory automation and robotics. As a result, it has interfaces specific to industrial robots in its library.

Industrial manipulators, grippers, sensors, and device networks are among them.
The way the software works and communicates is a major benefit of the robot operating system. It enables programmers to create complex software without having to understand how individual hardware functions.

Following the introduction of Ubuntu LTS versions, ROS releases a new version every May. Similarly, every six months — in December and July — ROS2 publishes a new version.

Robot Control Software

As you might expect, robot control software is a program that allows you to operate robots. It's a collection of programmed instructions that informs the machine what duties to complete on its own. Feedback loops, data filtering, location, and data sharing are just a few of the common duties that a robot program may do. The nature of robot software is very private. As a result, robot hardware manufacturers are frequently required to offer their own software in order for the machine to function.

How do I Learn to Program Robotics?

Only 10 of the world's roughly 1,500 programming languages are widely used in robotics. Pascal, Scratch, Industrial Robot Language, LISP, and Prolog are among them. C/C++, Python, JAVA, C# /.NET, MATLAB, and Hardware Description Language are all available.

The robot programming languages are listed below in order of their utility.

1. Pascal

Pascal is a simple programming language based on BASIC. It was created to teach excellent programming habits. This is due to the fact that it employs structured programming and data organization.
This programming language is also the foundation for a number of industrial robot programming languages. As a result, it's a great place to start for anyone who want to develop industrial robots.
While Pascal is too old to be used on a daily basis, it can help you learn other industrial robot languages. You may then look at other robot brands.

2. Scratch

Scratch is a popular programming language among aspiring roboticists, and for good reason. Essentially, the visual programming language entails dragging and linking blocks. As a consequence, it's great for first-time programmers – those aged eight to sixteen. Scratch is also the preferred programming language in most robotics clubs and school technology curricula.
Industrial robots are unlikely to be written in Scratch by most skilled roboticists. The language, on the other hand, is a good method for beginners to get into robotics.

3. Industrial Robot Languages

Almost every robot these days comes with its own programming language.
As you might expect, this has long been a problem in industrial robots. It implies that every time a user interacts with a new robot brand, they must learn a new language.
Karel is used by Fanuc robots, INFORM is used by Yaskawa, KRL (Kuka Robot Language) is used by Kuka, and RAPID is used by ABB. The list could go on and on.

Standardized choices are becoming available in several general-purpose programming frameworks, such as ROS Industrial. Technicians, on the other hand, are likely to continue to utilize the proprietary language.

4. LISP and Prolog

Artificial intelligence (AI) has lately gained in popularity. As a result, several AI programming languages are receiving greater attention than they have in the past. LISP and Prolog are two examples of such programming languages.

One of the first programming languages was LISP. As a result, it was a forerunner in the development of several computer science concepts, including automated storage management, conditionals, recursion, and higher-order functions.

Prolog, on the other hand, was one of the earliest logic programming languages. Prolog is used for theorem proving, expert systems, and automated planning, in addition to natural language processing.

Other languages on this list can be used to develop artificial intelligence. LISP and Prolog, on the other hand, are required in some AI systems. It's also worth remembering that robotics and artificial intelligence are two distinct sciences.

5. Hardware Description Language

Hardware Description Languages are used by engineers who design low-level electronics for robots to explain their prototypes. Programmers can easily define a circuit using words and symbols thanks to HDL. The written description can then be converted into configuration data for implementation using development tools. Verilog and VHDL are the most widely used Hardware Description Languages. They're also commonly used to program FPGAs (Field Programmable Gate Arrays) (FPGAs).

6. MATLAB

MATLAB is used by robotics engineers to analyze data and design control systems. Aside from data processing, this programming language is also used in several university courses for research.

Robotics engineers, on the other hand, employ MATLAB and Simulink to develop for a variety of reasons. These are some of them:

- Tuning algorithms
- Model real-world systems
- Generating codes automatically

Furthermore, they perform these functions from one software environment.

7. C# /.NET

C# is a Microsoft-developed programming language. The Microsoft Robotics Developer Studio – a Windows-based environment for robot control and simulation — uses it as its core language. As a result, researchers who wish to use the system will need to learn C#. Furthermore, the programming language provides the foundation for various well-known Virtual Reality engines, such as Unity. C#, on the other hand, isn't the easiest programming language to pick up. Starting with C/C++ is a good idea.

8. JAVA

Java is a general-purpose, class-based, object-oriented programming language. It was created with the goal of allowing application developers to write once and run anywhere (WORA). To put it another way, JAVA code can run on any platform that supports JAVA without needing to be recompiled. As a result, it is feasible to run the same code on many computers. In several aspects of robotics, JAVA is quite beneficial. It's one of the key languages of current AIs like AlphaGo and IBM's Watson, for example.

9. Python

Python is one of the most widely used programming languages, thanks to the rapidly expanding area of machine learning. Of fact, it was named the best programming language in 2019 by IEEE Spectrum. The simplicity of usage of this programming language is a key

benefit. Things that require time in programming, such as declaring and casting variable types, are no longer essential with Python.

Furthermore, Python comes with a large number of free libraries. As a result, programmers will no longer have to "reinvent the wheel" in order to provide fundamental functions.

Python is important in robotics since it is one of the key programming languages in Robot Operating System (ROS) (together with C++). However, as more robotic-friendly equipment accept the language by default, it may become even more popular.

10. C / C++

For obvious reasons, C and C++ are the most used programming languages in robotics. Several robotics hardware libraries are written in C or C++. Furthermore, these libraries enable low-level hardware interface. They also support performance in real time. In today's robotics, C++ is perhaps more helpful than C. The latter, on the other hand, is still one of the most energy-saving programming languages accessible. It's worth noting that C/C++ isn't as user-friendly as Python or MATLAB. Not only does implementing the same functionality in C take longer, but it also takes more lines of code. Robotics, on the other hand, is strongly reliant on real-time performance. As a result, C and C++ are the most similar to a standard programming language for robots.

SAMPLE TOPIC ACTIVITIES

Project

Title: Building a Chembot

Setting up the challenge

This project is all about collaborative thinking and working. Students use Lego Mindstorms robotics kits to create the robots, which they then outfit with sensors to assess the temperature and pH of a liquid. You may utilize a three-step, progressively collaborative process to assist students create and enhance their first thoughts about how to address the challenge:

1. *Think*: Students think independently about how to proceed, forming ideas of their own.
2. *Pair*: Students discuss their thoughts in pairs. This step allows students to articulate their ideas and to consider those of another person.
3. *Share*: Student groups share their ideas with a larger group, such as the whole class. Often students are more comfortable presenting ideas to a group with the support of a partner (from step 2).

To succeed in the challenge, the students also need to solve three problems in sequence:

1. How should the sensor and robot electronics be integrated to work together?
2. How will the robot manage to immerse the sensors into the liquid to take a measurement?
3. What do the results say about the relationship (if any) between the temperature of a liquid and its pH?

Materials

For each small group (e.g. four students), you will need:

- pH meter and adaptor, e.g. those made by Vernier
- Lego EV3 temperature sensor
- Computer, to write the code for the programmable robots
- Liquids at room temperature: water, plus (optional) vinegar or Coca-Cola
- Large bowl
- Ice cubes or water heater (use both for a larger range of data)
- A robot (lego, scrap, etc.,)

Procedure

The activity consists of five phases.

<u>Phase 1: Introduction</u>

First, discuss the following chemistry topics as a class:

- The theory of acidity and the definition of pH as a measure of the concentration of hydrogen ions in a liquid
- pH meters and the pH scale (the lower the pH, the greater the acidity)
- The challenge: to build a robot that can measure pH and temperature
- The experiment: what data to collect and how to analyse the results

Then divide the students into small groups so they can start thinking critically about their construction plans and the elements needed.

Phase 2: Constructing the robots

This phase is carried out with the students in their groups of four. The students build the basic robots using the Lego EV3 kits, then add the pH meters and temperature sensors to create the Chembots. To make a Chembot, students need to make decisions about:

- Robot morphology – what materials to use, what the robot will look like
- Robot parts – which items from the EV3 kits to use

Phase 3: Programming and testing the robot

Working in groups, the students then programme their robots to carry out the temperature and pH measurements using the programming environment, which is user-friendly and based on blocks. Each block represents a specific function. For example, one of the basic functions is the movement of the gears on the motors to control the sensors.

Once students think they have a working robot, they test it to resolve any remaining problems and challenges. This means ensuring that the sensors are working, the gears on the motors function well, the programming of the robot is correct, the construction of the robot is robust, and so on.

This is the most important and challenging phase – not only for the students but also for the teachers, who need to check that all the students understand what the aim of the project is and to help them with any problems they encounter.

Phase 4: Performance and adjustments

Each group takes a turn using their Chembot to take measurements. You can set up a testing desk in the laboratory with bowls containing the different liquids. To obtain water at different temperatures, put water at about room temperature (25 ˚C) into a bowl. Cool it gradually by adding ice cubes or heat it using the water heater, repeating the process for each group.

The students then use their Chembots to measure temperature and pH, reading the results from the EV3 screen of the robot and recording them.

Students should analyses their results and try to answer the initial question: what (if any) is the relationship between the temperature of water and its pH? Each group should produce a graph showing their results (this can be done using Excel), as well as their answer to the main question, and any information gathered about the pH of the other liquids.

Phase 5: Results and discussion

Finally, the results are discussed as a class. Can the students use their understanding of acids and pH to explain their results?

They should have found that there is a relationship between the temperature of water and its pH: the higher the temperature, the lower the pH. So why is this?

The pH scale represents the concentration of hydrogen (H^+) ions in a liquid. But it is the inverse logarithm (to base 10) of the concentration – so the more hydrogen ions there are, the lower the pH.

For example, at 25 ˚C, the concentration of H^+ ions in pure water is 10^{-7}, so its inverse log is 7, and thus the pH is 7. As the temperature of water rises, the number of molecules that are dissociated into H^+ and OH^- ions increases.

$$H_2O \rightleftharpoons H^+ + OH^-$$

The dissociation process happens to more molecules at higher temperatures, so there will be a higher number of H^+ ions – and the pH will fall. For example, at around 50 ˚C, the concentration of H^+ ions is about 10^{-6} (which is ten times larger than 10^{-7}), so its inverse log is 6 and its pH is 6. If the temperature of the water falls, the opposite happens: the concentration of hydrogen ions falls, so the pH increases.

You might like to challenge the students with this question: does the decrease in pH mean that the acidity of water increases with temperature? In fact, this is not the case: for each H^+ ion there is still an OH^- ion, so the water is still neutral. For a liquid to be acidic, it must have an excess of H^+ ions.

End note

At the end of the project, we asked students to complete a short questionnaire about the project. All of our students appreciated this attempt to create an interdisciplinary hands-on activity in the classroom – in fact, they would like this to happen more often in STEM curriculum subjects.

The students also gained an important insight from this project, beyond the details of robotics and chemistry: every field of science is not autonomous, but is connected to other sciences “like links in a chain”, as one student aptly commented.

Credit of this Project: Eleftheria Karagiorgau, Vasileio Spahos.
https://www.scienceinschool.org/article/2016/chembot-chemistry-robots/

References

(n.d.). Retrieved from http://samples.jbpub.com/9781449600914/86632_CH02_027_074.pdf

ashajyoti. (2021, August 30). *N terminus and c terminus in protein*. Retrieved from ScienceQuery.com: https://sciencequery.com/n-terminus-and-c-terminus-in-protein/

Parkinson, Giles. (2021, October 10). *Andrew Forrest to build massive hydrogen, wind, solar and cabling factory in Queensland*. Retrieved from reneweconomy.com.au: https://www.google.com/amp/s/reneweconomy.com.au/forrest-to-build-massive-hydrogen-wind-solar-and-cabling-factory-in-queensland/amps/

PNG Business News. (2021, August 11). *PNG SIGNS AGREEMENT WITH FORTESCUE METALS GROUP*. Retrieved from PNG Business News Website: www.pngbusinessnews.com/articles/2021/8/png-signs-agreement-with-fortescue-metals-group

Protein Sequencing. (2021, October 31). Retrieved from Wikipedia : https://en.wikipedia.org/wiki/Protein_sequencing#:~:text=Protein%20sequencing%20is%20the%20practical%20process%20of%20determining,identify%20the%20protein%20or%20characterize%20its%20post-translational%20modifications.

- Masterdokument_Zellherstellung_v63 Vordruckfreigabe.pptx (rwth-aachen.de)
- Robot Programming: A Guide to Programming Your Own Robots (edgy.app)
- Nanorobotics (fractal.org)
- Making and Operating Molecular Machines: A Multidisciplinary Challenge - Baroncini - 2018 - ChemistryOpen - Wiley Online Library
- Driving Smart Molecular Systems by Artificial Molecular Machines (wiley.com)
- Masterdokument_Zellherstellung_v63 Vordruckfreigabe.pptx (rwth-aachen.de)
- https://www.scienceinschool.org/article/2016/chembot-chemistry-robots/
- Robot Programming: A Guide to Programming Your Own Robots (edgy.app)
- Robotics Designing of PCB - javatpoint
- https://blog.finology.in/Legal-news/Ways-to-Commercialize-IPR
- https://www.upcounsel.com/why-do-patents-expire
- Ihttps://courses.lumenlearning.com/wmopen-introductiontobusiness/topic/intellectual-property-2/
- https://www.forbes.com/sites/arielcohen/2021/02/11/what-batteries-will-power-the-future/?sh=5ce1b64841c0
- https://view.officeapps.live.com/op/view.aspx?src=https%3A%2F%2Fcourses.mak.ac.ug%2Fsites%2Fdefault%2Ffiles%2Fdownloads%2FIndustrial%2520Biochemistry.doc&wdOrigin=BROWSELINK
- https://www.biochemistry.org/education/careers/becoming-a-bioscientist/what-is-biochemistry/
- https://chemintelligence.com/ai-for-chemistry#:~:text=Artificial%20Intelligence%20%28AI%29%20is%20being%20used%20more%20and,and%20the%20time%20to%20market%20for%20new%20drugs.
- https://www.javatpoint.com/facebook-data-mining
- https://www.cs.princeton.edu/courses/archive/fall05/cos597A/lectures/fundamentals.pdf
- Introduction to Protein Electrophoresis | Bio-Rad Laboratories
- http://samples.jbpub.com/9781449600914/86632_ch02_027_074.pdf
- Microsoft Word - Protein Gel Electrophoresis.doc (cpb-us-e1.wpmucdn.com)

- https://ccsuniversity.ac.in/bridge-library/pdf/Fundamentals-Medicinal-Chemistry-2003-By-Gareth-Thomas.pdf

- A sweet out-of-the-box solution to the hydrogen economy: is the sugar-powered car science fiction? - Energy & Environmental Science (RSC Publishing) DOI:10.1039/B818694D
- Grey, blue, green – the many colours of hydrogen explained | World Economic Forum (weforum.org)
- The Hydrogen Economy | Introduction to Chemistry (lumenlearning.com)
- Hydrogen Is the Fuel Of The Future. Or Is It? (cnbctv18.com)
- Fuel Cell - Definition, Working, Types, and Applications of fuel cell. (byjus.com)

- Credit of this Project: Eleftheria Karagiorgau, Vasileio Spahos. https://www.scienceinschool.org/article/2016/chembot-chemistry-robots/