TABLE OF CONTENTS

Table of Contents 1

1 Introduction **1**

1.1 Overview of the thesis 1

1.1.1 Part 1 1

1.1.2 Part 2 1

1.2 Main contributions 1

1.3 Bibliographical remarks 1

1.4 Excluded research 2

I Stochastic Non-convex Optimization: Algorithms and Complexity **3**

2 Introduction to stochastic optimization and learning **4**

2.1 High-dimensional stochastic non-convex optimization 10

2.1.1 Understanding first-order methods 13

2.2 Notation 21

2.3 Detailed proofs 23

3 Learning by finding stationary points **26**

3.1 Toolkit: Uniform convergence of gradients 27

3.1.1 Primer: Uniform convergence of function value 28

3.1.2 Vector-Rademacher complexities and uniform convergence . 30

3.1.3 Useful tools to bound vector-Rademacher Complexities . . . 32

3.2 Learning via stationary point finding algorithms 36

3.2.1 Gradient dominance and learning 37

3.2.2 Application: Generalized Linear Models 39

3.2.3 Application: Robust Regression 42

3.3 Discussion 44

3.3.1 Is uniform convergence necessary for learning? 47

3.4 Detailed proofs 50

3.4.1 Proofs for Section 3.2 50

3.4.2 Proof for Section 3.3 64

4 Understanding SGD and the role of implicit regularization **70**

4.1 Recap: Learning setup and algorithms 73

4.2 Regularized ERM, Implicit Regularization and SGD 74
4.3 Gradient Descent (Large-batch) vs SGD (Small-batch) 79
4.4 Single-pass vs Multi-pass SGD 82
4.5 Distribution Free Learning 85
4.6 Extensions to deep learning problems 88
4.7 Discussion 90
4.8 Detailed proofs 93
4.8.1 Basic probability results 93
4.8.2 Proofs for Section 4.2 94
4.8.3 Proofs for Section 4.3 103
4.8.4 Proofs for Section 4.8.4 131
4.8.5 Proofs for Section 4.5 140
4.8.6 Proofs for Section 4.6 153

5 If gradient flow converges on test loss, then SGD learns 160
5.1 Gradient Flow, Potentials and Geometry 164
5.1.1 Geometric Interpretation 168
5.2 Convergence of SGD 170
5.3 Applications 173
5.3.1 Kurdyka-Łojasiewicz (KŁ) functions 174
5.3.2 Phase retrieval 176
5.3.3 Initialization specific rates 178
5.3.4 Extending results of Chatterjee (2022) 181
5.4 Detailed proofs 183
5.4.1 Preliminaries 183
5.4.2 Proofs from Section 5.1 185
5.4.3 Proofs from Section 5.2 191
5.4.4 Kurdyka-Łojasiewicz (KŁ) functions 214
5.4.5 Phase retrieval 220
5.4.6 Proof of Lemma 27 239
5.4.7 Matrix Square root 243
5.4.8 Extending Chatterjee (2022) 261

6 Revisiting stochastic convex optimization 263
6.1 Tools: Minimax oracle complexity 268
6.2 Stochastic First-Order Complexity 271

6.3 Sample Complexity for finding stationary points 276
6.4 Discussion 281
6.5 Detailed proofs 283

II Interactive Learning via Stochastic Optimization 302

7 Introduction to interactive learning 303
7.1 Interactive learning problems 304
7.1.1 Reinforcement learning in MDPs 304
7.1.2 Decision making with structured observations 309

8 Agnostic learning in low rank MDPs 313
8.1 Agnostic learning setup and the low rank assumption 315
8.1.1 Why low rank MDPs? 316
8.1.2 Comparison to prior works 318
8.2 Upper bound: Agnostic RL in low rank MDPs 325
8.3 Matching lower bound 330
8.4 Detailed proofs 334
8.4.1 Cayley-Hamilton theorems 334
8.4.2 Proofs for Section 8.2 342
8.4.3 Proof of lower bound Theorem 41 357

9 Exploration-by-optimization for interactive decision making 381
9.1 Overview of results 383
9.2 Upper Bound 385
9.3 Lower Bound 391
9.4 Learnability and Comparison to Stochastic Setting 393
9.5 Examples 395
9.5.1 Structured Bandits 395
9.5.2 Reinforcement Learning 397
9.6 Comparison to the prior work 399
9.7 Discussion 402
9.8 Detailed proofs 403
9.8.1 Preliminaries 403
9.8.2 Technical Tools 404
9.8.3 Proof of Theorem 42 409

9.8.4 Proof of Theorem 44 411
9.8.5 Proofs for Examples (Section 9.8.5) 414

10 Conclusion and Future work **421**

CHAPTER 1

INTRODUCTION

1.1 Overview of the thesis

1.1.1 Part 1

1.1.2 Part 2

1.2 Main contributions

1.3 Bibliographical remarks

The results presented in this chapter first appeared in joint work with Satyen Kale and Karthik Sridharan (Sekhari et al., 2021c).

The results presented in this chapter first appeared in joint work with Satyen Kale, Jason D. Lee, Chris De San and Karthik Sridharan (paper upcoming).

The results presented in this chapter first appeared in joint work with Dylan J. Foster, Alexander Rakhlin and Karthik Sridharan (Foster et al., 2022).

The results presented in this chapter first appeared in joint work with Chris Dann, Yishay Mansour, Mehryar Mohri and Karthik Sridharan (Sekhari et al., 2021b).

The results presented in this chapter first appeared in joint work with Dylan J. Foster, Ohad Shamir, Nathan Srebro, Karthik Sridharan and Blake Woodworth

(Foster et al., 2019).

1.4 Excluded research

In order to keep my thesis concise, I have excluded various works that I did during my PhD from the thesis. They are listed below:

- Learning in PODMPs (Uehara et al., 2022a,b)
- Online active learning (Wang et al., 2021).
- Data augmentation in Reinforcement Learning (RL) (Dann et al., 2020).
- Understanding greedy algorithms in RL (Dann et al., 2022).
- Higher-order methods in stochastic optimization (Arjevani et al., 2020).
- Machine unlearning (Sekhari et al., 2021a).

Part I

Stochastic Non-convex Optimization: Algorithms and Complexity

CHAPTER 2

INTRODUCTION TO STOCHASTIC OPTIMIZATION AND LEARNING

In the **statistical learning setting**, a learner is given a hypothesis class $\mathcal{W}$ and a dataset S of samples $(z_1, \ldots, z_n) \sim \mathcal{D}$ where $\mathcal{D}$ is an unknown distribution over an instance space $\mathcal{Z}$. The learner aims to find a hypothesis that performs well w.r.t. $\mathcal{D}$. The learner has a *loss function* $f : \mathcal{W} \times \mathcal{Z} \mapsto \mathbb{R}$, where $f(w; z)$ defines the cost of choosing the model w for sample z, and measures the performance of a hypothesis $w \in \mathcal{W}$ using the expected loss over samples drawn from $\mathcal{D}$, defined as

$$F(w) = \mathbb{E}_{z \sim \mathcal{Z}}[f(w; z)]. \tag{2.1}$$

The goal of the learner is to find a hypothesis $\widehat{w}$ that has small *excess* expected loss relative to the best hypothesis in the class, given by

$$F(\widehat{w}) - \inf_{w \in \mathcal{W}} F(w^*). \tag{2.2}$$

The term $F(w)$ is often referred to as the *test loss* or *population loss* for the hypothesis w, and the term in (7.1) as the *excess risk* for w. Intuitively, $F(w)$ measures the expected performance of w on previously unseen samples from $\mathcal{D}$ (hence called test loss), and the goal of the learner is to find a hypothesis whose test loss is comparable to that of the best hypothesis in hypothesis class $\mathcal{W}$. However, since the learner does not know $\mathcal{D}$, it is restricted to minimizing the excess risk using samples from S. Additionally, we define the *training loss* or *empirical loss* by $\widehat{F}_n(w)$ as the average loss for the model w on the training data S i.e.

$$\widehat{F}_n(w) = \frac{1}{n} \sum_{i=1}^{n} f(w; z_i). \tag{2.3}$$

Next, we formally define a learning algorithm.

Definition 1. *A learning algorithm* $\mathbb{A} : \bigcup_{n\in\mathbb{N}} \mathcal{Z}^n \mapsto \mathcal{W}$ *is a mapping from sequences of data samples from* $\mathcal{Z}$ *to the set of hypothesis* $\mathcal{W}$*.*

A statistical learning problem is said to be "learnable" if there exists a learning algorithm $\mathbb{A}$ which, for any distribution $\mathcal{D}$, succeeds in finding a $\widehat{w} = \mathbb{A}(S)$ that has small excess risk (7.1). In particular, we require that $\mathbb{A}$ is such that

$$\sup_{\mathcal{D}} \ \mathbb{E}_{S\sim\mathcal{D}^n}[F(\mathbb{A}(S))] - \inf_{w\in\mathcal{W}} F(w) \leq \epsilon(n), \tag{2.4}$$

where $\epsilon(n)$ accounts for the "statistical error" due to unknown $\mathcal{D}$, and satisfies $\epsilon(n) \to 0$ as $n \to \infty$. Whenever (7.2) holds, we say that the algorithm $\mathbb{A}$ succeeds in learning at the rate of $\epsilon(n)$. Statistical learning with general hypothesis classes $\mathcal{W}$ is a well studied problem **?**, and over the past three decades there has been a plethora of research on understanding conditions under which (7.2) is possible **?**, and to develop algorithms that attain the corresponding excess risk bounds **?**.

Learning as a stochastic optimization problem. The main objective of statistical learning in (7.2) can be interpreted as an optimization problem, where the learner can find a good hypothesis by solving

$$\min_{w\in\mathcal{W}} \quad F(w) := \mathbb{E}_{z\sim\mathcal{D}}\, f(w\,;z). \tag{2.5}$$

However, note that minimizing (2.5) is not that straightforward as the learner does not have access to the distribution $\mathcal{D}$ and thus the test loss F, but is instead restricted to accessing information about F by making queries using the samples in S. We use the notion of *oracle classes* to formalize how the optimizer is allowed to access information about F. An oracle $\mathcal{O}$ accepts an argument $w \in \mathbb{R}^d$ and provides (potentially noisy or stochastic) information about the objective F around

the point w. The oracle's output belongs to an *information space* $\mathcal{I}$. Standard oracle models used are:

- *Stochastic zeroth-order oracle.* The information space $\mathcal{I} \subseteq \mathbb{R}$. On every query at a point w, the oracle chooses a previously unused sample z from S (or equivalently draws an independent sample from $\mathcal{D}$) and returns

$$O_{\nabla F}(w) = f(w; z). \tag{2.6}$$

  Thus, on every query at a point w, the optimizer get a stochastic unbiased estimate of $F(w)$.

- *Stochastic pth-order oracle.* Defined for any $p \geq 1$ and the information space $\mathcal{I} \subseteq \bigtimes_{0 \leq k \leq p} \mathbb{R}^{dk}$. On every query at a point w, the oracle chooses a previously unused sample z from S (or equivalently draws an independent sample from $\mathcal{D}$) and returns

$$O_{\nabla^p F}(w) = (f(w; z), \nabla f(w; z), \ldots, \nabla^p f(w; z))_{z \sim \mathcal{D}}. \tag{2.7}$$

  Thus, on every query at a point w, the optimizer get a stochastic unbiased estimate of $F(w)$, the gradient $\nabla F(w)$, and the higher-order derivative. When $p = 1$, we call such an oracle as *stochastic first-order oracle.*

- *Stochastic global oracle.* The information space $\mathcal{I} \subseteq (\mathbb{R}^d \mapsto \mathbb{R})$. When queried at a point w, the oracle chooses a previously unused sample z from S (or equivalently draws an independent sample from $\mathcal{D}$) and returns the complete specification of the function $f(\cdot, z)$, specifically,

$$O_f(w) = (f(\cdot, z))_{z \sim \mathcal{D}}. \tag{2.8}$$

For consistency with the other oracles, we say that O_f accepts an argument w, even though this argument is ignored. The stochastic global oracle captures the *statistical complexity* of the problem, in which $f(\cdot; z)$ is the loss of a model evaluated on an instance $z \sim \mathcal{D}$, and this component function is fully known to the optimizer. Consequently, we use the terms "global stochastic complexity" and "sample complexity" interchangeably.

Correspondingly, the optimization algorithms that rely on information from the above specified oracles are called *stochastic zeroth-order algorithms*, *stochastic pth-order algorithms* (stochastic first-order algorithms when $p = 1$), and *stochastic global algorithms*. Optimization problems where the optimizer wishes to minimize an unknown test loss F but can only access information about it by making queries to a stochastic oracle (which returns a stochastic unbiased estimate of underlying properties of F as described above) are referred to as **stochastic optimization problems**.

The statistical learning problem can be formulated as a stochastic optimization problem, since the dataset $S \sim \mathcal{D}^n$ can be used to simulate the corresponding stochastic oracle queries. This stochastic optimization viewpoint of learning has been well known in the machine learning literature **?**. In fact, some of the most popular machine learning tasks are solved by formulating the underlying statistical learning problem as a stochastic optimization problem, examples include:

- *Learning with Support Vector Machines (SVM):* Support vector machines are effective and popular classification learning tools (Poggio et al., 2012; Cristianini et al., 2000), used for tasks where the instance space $\mathcal{Z} = \mathcal{X} \times \mathcal{Y}$ with $\mathcal{X} \subseteq \mathbb{R}^d$ and $\mathcal{Y} \in \{-1, +1\}$, and the learner aims to find a good

classifier of the form $h(w; x) = \text{sign}(\langle w, x\rangle)$ where $\mathcal{W} = \{w \in \mathbb{R}^d \mid \|w\| \leq 1\}$. The standard approach for learning SVMs follows by solving the stochastic optimization problem

$$\min F(w) = \mathbb{E}_{(x,y)\sim\mathcal{D}}[f(w; (x, y))] \tag{2.9}$$

where

$$f(w; (x, y)) = \max\{0, 1 - y\langle w, x\rangle\} + \lambda\|w\|^2.$$

using samples $S = \{z_i = (x_i, y_i)\}_{i=1}^n$ drawn i.i.d. from the distribution $\mathcal{D}$, unknown to the learner. The instantaneous loss f defined above is called regularized hinge-loss. SVM is typically trained by solving the stochastic optimization problem in (2.9) using first-order methods (Shalev-Shwartz et al., 2011).

- *Learning with feedforward neural networks:* Feedforward neural networks are incredibly successful for learning in complex computer vision, and natural language processing tasks**?**. In a typical classification or regression problem, the instance space $\mathcal{Z} = \mathcal{X} \times \mathcal{Y}$ where $\mathcal{X} \subseteq \mathbb{R}^d$ and $\mathcal{Y} = \{-1, 1\}$ for binary classification tasks and $\mathcal{Y} \subseteq \mathbb{R}$ for regression tasks. For a L layer neural network, the output of the ℓ-th layer of the network on a sample (x, y) is computed using the iterative update

$$h_\ell(W_{1:\ell}; x) = \sigma_i(W_\ell h_{\ell-1}(W_{1:\ell-1}; x)) \qquad \text{and} \qquad h_1(W_1; x) = \sigma_1(W_1 x),$$

where $W_1, \ldots, W_L$ are the weight matrices corresponding to each layer and σ_i denote non-linear activation functions. Popular choice of activation function include sigmoid $\sigma(\beta) = 1/(1 + e^{-\beta})$, ReLU $\sigma(\beta) = \max\{0, \beta\}$, etc. The trainable parameters is defined as $W = (W_1, \ldots, W_L)$. Learning with neural networks is typically performed by defining the instantaneous loss function

$$f(W; (x, y)) = \ell(h_L(W; x), y)$$

where the typical choice of ℓ include absolute loss $\ell(\alpha, \beta) = |\alpha - \beta|$ for regression, hinge-loss $\ell(\alpha, \beta) = \max\{0, 1 - \alpha\beta\}$ for classification, etc. Neural networks are trained by solving the stochastic optimization problem

$$\min F(w) = \mathbb{E}_{(x,y)\sim\mathcal{D}}[f(W; (x, y))] \tag{2.10}$$

typically using a first-order method like SGD, (Duchi et al., 2011), Adam (Kingma and Ba, 2014), etc. We note that state-of-the-art feedforward neural networks are generally over-parameterized with millions and billions of trainable parameters. It is infact common to use networks where the number of trainable parameters are much larger than the number of data samples available for training.

We refer the reader to the extensive survey by Jain et al. (2017b) for more examples.

Note that the instantaneous loss f for SMV is convex in w, and thus the corresponding stochastic optimization problem corresponding to minimizing a convex test loss (also known as *Stochastic Convex Optimization (SCO)*. By now, we have a fairly complete understanding of the complexity and algorithms for minimizing convex test losses, both in high and low-dimensional setting **?**. In contrast, note that the test loss induced in neural networks, matrix decomposition, and various other popular modern machine learning applications are not convex in w. Furthermore, the corresponding non-convex stochastic optimization problem often consists of million and billion of parameters thus leading to a **high-dimensional and non-convex stochastic optimization problem**. The focus of this thesis is to under when and why such stochastic optimization problems are solvable, and to design algorithms to approach them.

2.1 High-dimensional stochastic non-convex optimization

The high-dimensionality of modern machine learning problems restricts the type of methods that can be used for solving the underlying stochastic optimization task. For example, the state-of-the-art deep neural networks—now ubiquitous in machine learning—are often over-parameterized with $d >> n$ (Zhang et al., 2021b). Thus, to even be implementable, the stochastic optimization algorithm used must optimize using only stochastic queries of the function value ($f(w; z)$; zeroth-order optimization) and the gradient ($\nabla f(w; z)$; first-order optimization). In fact, even computing higher-order information like hessian ($\nabla^2 f(w; z)$) in these applications requires $O(d^2)$ memory which is too large to be practical [1]. Over the past few years, this has lead to significant research effort from both theoreticians and practitioners of machine learning for designing and understanding first-order stochastic optimization methods for solving their high-dimensional learning problems.

This research endeavor has been quite successful, and many first-order stochastic optimization algorithms have been developed, including Gradient descent (Nesterov, 2013), SGD (Ghadimi and Lan, 2013), Non-convex SVRG (Reddi et al., 2016b; Allen-Zhu and Hazan, 2016), SCSG (Lei et al., 2017), Adagrad (Duchi et al., 2011), Adam (Kingma and Ba, 2014), **?**, etc. for solving the stochastic optimization problems that appear in various applications. Generally speaking, these first-order optimization algorithms have been empirically very successful for learning with large non-convex models, often with minimal hyper-parameter tuning. Given the ubiquity of these methods for solving complex problems in practice,

[1] We note that stochastic Hessian-vector product queries can be computed as efficiently as computing a stochastic gradient for many models including deep neural networks (Pearlmutter, 1994). This has lead to development of efficient hessian-vector product based algorithms for non-convex stochastic optimization (Arjevani et al., 2020) under additional assumptions. However, for the sake of consistency, we skip the discussion of higher-order methods from this thesis.

one can rightfully claim that first-order methods are the workhorse of modern machine learning. However, there are still large gaps in theory and practice here. Our understanding of when and why these methods work is still quite rudimentary, and it is not at all clear whether the current optimization algorithms have the optimal rates of convergence. I believe that building strong theoretical foundations for understanding first-order methods in non-convex stochastic optimization is essential to realize the full potential of machine learning. With that motivation in mind, the key question that we work towards answering in this thesis is:

Why do first-order stochastic optimization algorithms learn so well in practice, even when the test loss can be non-convex?

Why is non-convex optimization hard? The non-convexity of the optimization objective presents a formidable challenge to the optimizer. Firstly, many non-convex optimization problems are known to be NP-hard to minimize (Murty and Kabadi, 1985). The situation is made worse by the fact that there are some non-convex problems that are NP-hard to even minimize approximately (Meka et al., 2008). At an intuitive level, the hardness of non-convex optimization arises from the fact that the loss landscape may consists of spurious stationary points, saddle points, local minima, etc which first-order optimization algorithms can converge to. In the following, we briefly define them further for the function F:

- *Stationary points.* A point w is a stationary point of F if $\|\nabla F(w)\| = 0$. Furthermore, w is an ϵ-*approximate* stationary point if

$$\|\nabla F(w)\| \leq \epsilon.$$

- *Second-order stationary points.* A point w is a second-order stationary point

of F if $\|\nabla F(w)\| = 0$ and $\nabla^2 F(w) \succcurlyeq 0$. Furthermore, w is an (ϵ, γ)-second-order stationary point of F if

$$\|\nabla F(w)\| \leq \epsilon, \qquad \text{and} \qquad \nabla^2 F(w) \succcurlyeq -\gamma \mathbb{I}.$$

Second-order stationary points are also called as *saddle points*.

- *Local minimizer.* A point w is a local minimum of F if there exists a $\delta > 0$ such that for any w' such that $\|w' - w\| \leq \delta$, we have that $F(w') > F(w)$. Intuitively, w is a local minimum if is a minimizer in some local neighborhood around w.[2]

- *Global minimizer.* A point w is called a global minimizer if

$$w \in \operatorname*{argmin}_{\widetilde{w}} F(\widetilde{w}).$$

In particular, for any other $\widetilde{w} \neq w$, we have that $F(w) \leq F(\widetilde{w})$. Furthermore, we say that w is an ϵ-approximate global minimizer if

$$F(w) - \min_{\widetilde{w}} F(\widetilde{w}) \leq \epsilon. \tag{2.11}$$

We note that while the above definitions are w.r.t. the test loss F, we can similarly define the stationary points, local minimizers and global minimizers for the training loss $\widehat{F}_n$.

We note that first-order optimization algorithms convergence to the stationary points of the loss (which could be training loss or the test loss depending on the algorithm being used), and the hardness of non-convex stochastic optimization arises primarily due to the fact that the loss landscape may have stationary points and local minimum that do not correspond to the global minimizer. In order

[2]We note that it is NP-Hard to decide whether a second-order stationary point is a local minimum or a higher-order saddle point(Murty and Kabadi, 1985).

to explain the practical success of first-order methods for learning, we need to understand which algorithms converge to the global minimizers of the test loss and why?

2.1.1 Understanding first-order methods

Understanding when and why do first-order optimization algorithms learn despite non-convexity of the problem has been an active area of research in recent years. Notable works include: **?**. At a high level, the key ideas used to establish convergence of first-order optimization to global minimizers of the test loss can be broken down into two main categories:

- Establishing geometric properties of the test loss, e.g. convexity, using which one can directly argue that the first-order algorithm is optimizing the test loss, and will converge to its global minimizers.
- Arguing that the first-order methods are optimizing the training loss and converge to its stationary points, but the returned stationary points are close to the global minimizers of the test loss, and thus the algorithm learns.

In the following, we elaborate more on these two viewpoints. We will also focus our attention on understanding these viewpoints for learning using **Stochastic Gradient Descent (SGD)**, one of the simplest and most popular first-order stochastic optimization algorithm used in practice. SGD algorithm (mini-batch size 1) is an iterative algorithm that at every round $t \geq 0$, uses a fresh sample z_t from S to compute a stochastic unbiased estimate $\nabla f(w_i; z_i)$ of the gradient

$\nabla F(w_i)$, and performs the update

$$w_{t+1} \leftarrow w_t - \eta \nabla f(w_t; z_t) \tag{2.12}$$

where η is the step size and w_0 denotes the initial point. After using all the samples in S, i.e. after n iterations, SGD algorithm returns $\widehat{w}$ by sampling a point uniformly at random from the set $\{w_1, \ldots, w_n\}$.

We need to make additional assumptions on the returns of the stochastic oracle, and the test loss, to even hope to show a convergence of the first-order methods. We adopt the standard assumptions commonly used in the literature. Unless specified, throughout the thesis, we assume that the stochastic gradients satisfies the following bounded variance assumptions

Assumption 1 (Bounded-variance)**.** For any point w, the distribution $\mathcal{D}$ has bounded gradient variance i.e.

$$\mathbb{E}_{z\sim\mathcal{D}}\left[\|\nabla f(w; z) - \nabla F(w)\|^2\right] \leq \sigma^2.$$

In addition to this, we also assume that the test loss F is well-behaved. We capture this by either assuming that the test-loss is Lipschitz, or that is is smooth.

Definition 2 (Lipschitz functions)**.** *A function $F : \mathbb{R}^d \mapsto \mathbb{R}$ is said to be L-Lipschitz if for any points w, w',*

$$|F(w) - F(w')| \leq L\|w - w'\|.$$

Definition 3 (Smooth functions)**.** *A function $F : \mathbb{R}^d \mapsto \mathbb{R}$ is said to be H-smooth if for any points w, w',*

$$F(w') \leq F(w) + \langle \nabla F(w), w - w' \rangle + \frac{H}{2}\|w - w^*\|^2.$$

Learning via convexity-like properties.

In various applications, one can directly show convergence of first-order optimization algorithms to global minimizers of the test loss, by utilizing additional geometric properties of the test loss F. For illustration, consider one of the simplest and the most well studied stochastic optimization problem is the literature—*Stochastic Convex Optimization* (SCO), where the distribution $\mathcal{D}$ satisfies Assumption 1, and the test loss is convex in w, i.e.,

Assumption 2 (Convex losses)**.** The test loss F is convex if for any w, w',

$$F(w) - F(w') \leq \langle \nabla F(w), w - w' \rangle.$$

For SCO problems, a classic result from Nemirovski and Yudin (1983a) shows that SGD learns at the rate of $1/\sqrt{T}$:

Theorem 1 (Nemirovski and Yudin (1983a))**.** *Suppose that the test loss F is convex and L-Lipschitz, and the distribution $\mathcal{D}$ satisfies Assumption 1. Let w_1 be any initial point such that $\|w_1 - w^*\| \leq B$ for some $w^* \in \operatorname{argmin} F(w)$. Then, the point $\widehat{w}$ returned by running SGD algorithm given in (2.12) with step size $\eta = 1/\sqrt{n}$ and for n satisfies*

$$\mathbb{E}[F(\widehat{w})] - \inf_{w} F(w) \leq O\left(\frac{1}{\sqrt{n}}\right),$$

where the O notation hides dependence on σ, L and B.

We defer the complete proof to Section 2.3, and discuss high-level ideas here. Note that the proof of convergence is based on the application of the geometric property

$$F(w) - F(w^*) \leq \langle \nabla F(w), w - w^* \rangle, \tag{2.13}$$

which is a direct consequence of convexity of F. In particular, (2.13) allows one to relate the sub-optimality at a point w (in the left hand side of (2.13)) to the magnitude of the gradient of F along the direction $w - w^*$. This has two benefits: Firstly, (2.13) suggests that finding a point with small $\|\nabla F(w)\|$ implies a bound on $F(w) - F(w^*)$, whenever $\|w - w^*\|$ is bounded. Secondly, due to linearity of expectations, the terms on the right hand side of (2.13) has the property that

$$\langle \nabla F(w), w - w^* \rangle = \mathbb{E}[\langle \nabla f(w; z), w - w^* \rangle] \tag{2.14}$$

where z is sampled independent of w. (2.14) is precisely why we can even hope to optimize the test loss when using stochastic estimates of the gradient of the test loss. While, SGD algorithm uses stochastic estimates $\nabla f(w_t; z_t)$ at each iteration, (7.7) suggests that this can be thought of as using the exact gradient of the test loss in expectation. In a sense, SGD can be thought of as minimizing F using noisy gradient estimates. Furthermore, since F is convex, if we somehow had access to its exact gradients $\nabla F(w)$, then gradient descent will converge to its global minimizers. Combining this intuition with the fact that SGD uses noisy gradient estimates for its updates, explains why SGD succeeds for learning in SCO problems.

Properties similar to (2.13) have been considered in the literature to analyze convergence in test losses which are not convex. A straightforward extension of (2.13), popular in literature and satisfied by many non-convex models of interest, e.g. diagonal neural networks **?**, is that of *linearizable* losses.

Definition 4 (α-Linearizable)**.** *The test loss F is α-Linearizable if there exists a $w^* \in \operatorname{argmin} F(w)$ such that for every $w \in \mathbb{R}^d$,*

$$F(w) - F(w^*) \leq \alpha \langle \nabla F(w), w - w^* \rangle. \tag{2.15}$$

Given the close resemblance between (2.13) and (7.5), one can easily verify that the proof of Theorem 1 also extends to show convergence of SGD for linearizable losses, albeit with a multiplicative α factor in the bound. Here as well, the proof follows by showing that SGD can be thought of as minimizing the test loss $F(w)$ using stochastic gradient estimates $\nabla f(w_t; z_t)$ for $\nabla F(w_t)$, and the test loss F is such that if we had access to the exact gradients $\nabla F(w)$ then gradient descent will converge to its global minimizers.

Similarly, other geometrical properties like *star-convexity* (Zhou et al., 2019; Hinder et al., 2020), *one-point convexity* (Li and Yuan, 2017; Kleinberg et al., 2018a), τ-*star convexity* (Hardt et al., 2018), etc have been explored to analyze non-convex problems in different applications. However, the key idea remains the same and the proofs follow by showing that a relationship similar to (2.13) or (2.15) holds for the test loss, which implies that SGD can be thought of as directly minimizing F but with stochastic gradient estimates, and because F is amenable to gradient based minimization.

While this approach has been quite useful for understanding various stochastic optimization settings, many challenges remain:

- For a new problem of interest, what is the appropriate geometric property of the test loss (in the spirit of (2.13) or (2.15)) that can be used to show convergence of first-order optimization algorithms to global minimers of the test loss?
- Is test loss being amenable to optimization (i.e. gradient descent using $\nabla F(w_t)$ converge to global minimizers of F), sufficient to ensure that SGD learns?

Learning via finding stationary points.

An alternative viewpoint to explain the success of first-order methods for learning is based on the fact that they converge to stationary points (see Jain et al. (2017b) for a survey). Algorithms that use a fresh sample from S for every iteration, e.g. SGD, can be shown to converge directly to stationary points of the test loss. Consider the following classical result for convergence of SGD (proof in Section 2.3):

Theorem 2 (Ghadimi and Lan (2013); Drori and Shamir (2020))**.** *Let F be an H-smooth stochastic optimization problem. Then, the point $\widehat{w}$ returned by running SGD algorithm given in (2.12), with step size $\eta \leq \min\left\{1/2H, \sqrt{F(w_1)/Hn}\right\}$ for n steps using the dataset S satisfies*

$$\mathbb{E}[\|\nabla F(\widehat{w})\|] = O\left(\frac{1}{n^{1/4}}\right). \tag{2.16}$$

where the O notation hides dependence on σ and $F(w_1)$.

Similar convergence results have also been shown for other first-order methods that use a new samples for each update step **?**. On the other hand, many first-order algorithms eg multi-pass SGD, gradient descent using the entire training data to compute a gradient estimate, etc do directly optimize the test loss (as they reuse samples). In fact, such algorithms can be thought of as optimizing the training loss $\widehat{F}_n$, and via a similar analysis to Theorem 2 can be shown to converge to the stationary points of the training loss, i.e. the returned $\widehat{w}$ satisfies

$$\mathbb{E}\left[\|\nabla \widehat{F}_n(\widehat{w})\|\right] \leq \epsilon_1(n), \tag{2.17}$$

where $\epsilon(n) \to 0$ and $n \to \infty$.

In order to understand algorithms that only guarantee (2.17), we first note that under additional assumptions, one can argue that the stationary points of the

training loss are close to the stationary points of the test loss. Note that the key difference between (2.16) and (2.17) is whether the guarantee is with respect to the training loss or the test loss, and standard statistical learning theory tools like uniform convergence, etc **?** can be applied to bound the gap

$$\sup_{w \in \mathcal{W}} \Big| \|\nabla F(w)\| - \|\nabla \widehat{F}_n(w)\| \Big| \leq \epsilon_2(w). \tag{2.18}$$

This could in-general be a hard problem as the standard statistical learning theory tools to bound the gap in (2.18) may lead to a polynomial dependence on the dimension d, which could be too restrictive for high-dimensional problems. In Chapter 3, we develop tools and techniques for uniform convergence of gradient to control (2.18).

Using these tools, one can thus argue that first-order methods converge to stationary points of the test loss, i.e. the returned point $\widehat{w}$ satisfies

$$\mathbb{E}[\|\nabla F(\widehat{w})\|] \leq \mathbb{E}\Big[\|\nabla \widehat{F}_n(\widehat{w})\|\Big] + \Big| \|\nabla F(w)\| - \|\nabla \widehat{F}_n(w)\| \Big| = \epsilon_1(n) + \epsilon_2(n) =: \epsilon_3(n). \tag{2.19}$$

While the above just shows convergence to stationary points of the test loss, for various application domains, one can further argue that test loss has the so called "*no bad stationary points*" property where all its stationary points are global minimizers **?**. In this case, ensuring (2.19) will imply that the algorithm learns. One of the most popular instances of this property in the literature is *Gradient Dominance*.

Definition 5. *The population risk F satisfies the (α, μ)-gradient dominance condition if*

$$F(w) - F(w^\star) \leq \mu \|\nabla F(w)\|^\alpha \quad \forall w \in \mathcal{W}, \tag{2.20}$$

where $w^\star \in \operatorname{argmin}_{w \in \mathcal{W}} F(w)$ is any population risk minimizer.

Gradient dominance with $\alpha = 2$ is often referred to as the Polyak-Łojasiewicz (PŁ) condition (Polyak, 1963a; Karimi et al., 2016a). Other values of $\alpha \in [0, 1]$ is called Kurdyka-Łojasiewicz (KŁ) condition **?**. Furthermore, the general gradient dominance is itself implied (under technical restrictions) by many other well-known conditions including one-point convexity (Li and Yuan, 2017), star convexity and τ-star convexity (Hardt et al., 2018), and so-called "regularity conditions" (Zhang et al., 2016); for more see Karimi et al. (2016a). The gradient dominance condition is satsified—sometimes locally rather than globally, and usually under distributional assumptions— by the population risk in settings including neural networks with one hidden layer (Li and Yuan, 2017), ResNets with linear activations (Hardt and Ma, 2017), phase retrieval (Zhang et al., 2016), matrix factorization (Liu et al., 2016), blind deconvolution (Li et al., 2018), and—as we show in Chapter 3—generalized linear models and robust regression.

The gradient dominance condition implies the "no bad stationary points" property, and thus (2.19) implies that any algorithms that any stationary point finding algorithm that ensures $\mathbb{E}[\|\nabla F(w)\|] \leq \epsilon(n)$ will succeed in learning at the rate $\mathbb{E}[F(\widehat{w}) - F(w^*)] \leq \epsilon(n)^\alpha$. Prior works has extended this intuition to other geometric properties that behave like gradient dominance, many questions still remain:

- What are the (optimal) tools and techniques for uniform convergence of gradients to understand the rates at which first-order algorithms converge to stationary points of the test loss?
- Is uniform convergence of gradients necessary for success of first-order methods?
- What properties of the loss function ensure that algorithms that find stationary points of the training loss succeed in learning? What are the optimal

rates for such losses?

So far, we have discussed two main approaches for showing convergence of first-order methods to global minimizers of the test loss. The first approach argues that the test loss has convexity-like properties due to which the first-order algorithm can be seen as directly optimizing the test loss using noisy gradient estimates, and hence convergence to its global minimizers. The second approach argues that the first-order algorithm minimizes the training loss and returns its stationary points, and under additional properties like uniform convergence and gradient dominance, these stationary points correspond to global minimizer of the test loss (and thus the algorithm learns). Is there a unified approach that brings both of these frameworks under the same umbrella?

We delve more into the latter approach in Chapter 3 and the former approach in Chapter 4. Then, in Chapter 5, we provide a unified framework to understand learning with first-order methods that captures both of these viewpoints.

2.2 Notation

In Table 2.1, we provide additional notation that we use throughout the first part of the thesis.

$a, b, c, \alpha, \beta, \ldots$	Constant scalars
$x, y, z, w, \ldots$	Variable vectors in $\mathbb{R}^d$
$A, B, W, \ldots$	Variable matrices in $\mathbb{R}^{d \times d}$
$w[j]$	j-th coordinate of the vector w
$\mathbb{1}$	All ones vector
$x \odot y$	Coordinate wise product of x, y i.e. $(x \odot y)[j] = x[j] \cdot y[j]$
$\langle x, y \rangle$	Inner product of vectors x and y
I_d	$d \times d$ Identity matrix
$\|\cdot\|, \|\cdot\|_*$	A given norm and its dual norm
$\|\cdot\|_p$	Standard ℓ_p norm on $\mathbb{R}^d$
$\|\cdot\|_\infty$	Standard ℓ_∞ norm on $\mathbb{R}^d$
$\sigma_k(W)$	k-th largest singular value of the matrix W
$\|\cdot\|_\sigma$	Spectral norm of a matrix
$\nabla f(w)$	Gradient of the function f at point w
$\nabla^2 f(w)$	Hessian of the function f at point w
$\mathcal{N}(0, \sigma^2)$	Gaussian distribution with mean 0 and variance σ^2
$\mathcal{B}(p)$	Bernoulli distribution with mean p

Table 2.1: Additional notation

2.3 Detailed proofs

Proof of Theorem 1. Let $\{w_t\}_{t\geq 1}$ denote the sequence of iterates generated by the SGD algorithm. We note that for any time $t \geq 1$,

$$\begin{aligned}
\|w_{t+1} - w^*\|_2^2 &= \|w_{t+1} - w_t + w_t - w^*\|_2^2 \\
&= \|w_{t+1} - w_t\|_2^2 + \|w_t - w^*\|_2^2 + 2\langle w_{t+1} - w_t, w_t - w^*\rangle \\
&= \|-\eta \nabla f(w_t; z_t)\|_2^2 + \|w_t - w^*\|_2^2 + 2\langle -\eta \nabla f(w_t; z_t), w_t - w^*\rangle,
\end{aligned}$$

where the last line follows from plugging in the SGD update rule (2.12).

Rearranging the terms in the above, we get that

$$\langle \nabla f(w_t; z_t), w_t - w^*\rangle \leq \frac{\eta}{2}\|\nabla f(w_t; z_t)\|_2^2 + \frac{1}{2\eta}\big(\|w_t - w^*\|_2^2 - \|w_{t+1} - w^*\|_2^2\big).$$

Taking expectation on both the sides, while conditioning on the point w_t, implies that

$$\begin{aligned}
\langle \nabla F(w_t), w_t - w^*\rangle &\leq \frac{\eta}{2}\,\mathbb{E}\big[\|\nabla f(w_t; z_t)\|_2^2\big] + \frac{1}{2\eta}\big(\|w_t - w^*\|_2^2 - \|w_{t+1} - w^*\|_2^2\big) \\
&\leq \eta\,\mathbb{E}\big[\|\nabla f(w_t; z_t) - \nabla F(w_t)\|_2^2\big] + \eta\|\nabla F(w_t)\|_2^2 \\
&\qquad + \frac{1}{2\eta}\big(\|w_t - w^*\|_2^2 - \|w_{t+1} - w^*\|_2^2\big) \\
&\leq \eta(\sigma^2 + L^2) + \frac{1}{2\eta}\big(\|w_t - w^*\|_2^2 - \|w_{t+1} - w^*\|_2^2\big),
\end{aligned}$$

where the inequality in the second line is given by the fact that $(a-b)^2 \leq 2a^2 + 2b^2$ and the last line follows from the assumption that $\mathbb{E}\big[\|\nabla f(w_t; z_t) - \nabla F(w_t)\|_2^2\big] \leq \sigma^2$, and because $F(w)$ is L-Lipschitz. Next, using convexity of the function F, we have that $F(w^*) \geq F(w_t) - \langle \nabla F(w_t), w_t - w^*\rangle$. Thus

$$F(w_t) - F^* \leq \eta(\sigma^2 + L^2) + \frac{1}{2\eta}\big(\|w_t - w^*\|_2^2 - \|w_{t+1} - w^*\|_2^2\big).$$

Telescoping the above for t from 1 to n, we get that

$$\sum_{t=1}^{n}(F(w_t) - F^*) \leq \eta n(\sigma^2 + L^2) + \frac{1}{2\eta}\big(\|w_1 - w^*\|_2^2 - \|w_{n+1} - w^*\|_2^2\big)$$
$$\leq \eta n(\sigma^2 + L^2) + \frac{1}{2\eta}\|w_1 - w^*\|_2^2.$$

Dividing both the sides by n, we get that

$$\frac{1}{n}\sum_{t=1}^{n}(F(w_t) - F^*) \leq \eta(\sigma^2 + L^2) + \frac{1}{2\eta n}\|w_1 - w^*\|_2^2.$$

An application of Jensen's inequality on the left hand side, implies that the point $\widehat{w}_n := \frac{1}{n}\sum_{t=1}^{n} w_t$ satisfies

$$\mathbb{E}[F(\widehat{w}_n) - F^*] \leq \eta(\sigma^2 + L^2) + \frac{1}{2\eta n}\|w_1 - w^*\|_2^2.$$

Setting $\eta = \frac{1}{\sqrt{n}}$ and using the fact that $\|w_1 - w^*\|_2 \leq B$ in the above, we get that

$$\mathbb{E}[F(\widehat{w}_n) - F^*] \leq \frac{1}{\sqrt{n}}\big(\sigma^2 + L^2 + B^2\big),$$

which is the desired claim. Dependence on the problem specific constants (σ, L and B) in the above bound can be improved further with a different choice of the step size η; getting the optimal dependence on these constants, however, is not the focus of this work . □

Proof of Theorem 2. Let $\{w_t\}_{t\geq 1}$ denote the sequence of iterates generated by the SGD algorithm. From the smoothness of F, we get that for any $t \geq 0$,

$$F(w_{t+1}) \leq F(w_t) + \langle \nabla F(w_t), w_{t+1} - w_t\rangle + \frac{H}{2}\|w_{t+1} - w_t\|^2$$
$$= F(w_t) - \eta\langle \nabla F(w_t), \nabla f(w_t; z_t)\rangle + \frac{H\eta^2}{2}\|\nabla f(w_t; z_t)\|^2,$$

where the last line holds by plugging in the SGD update rule in (2.12). Taking expectation on both the sides w.r.t. z_t, we get that

$$\mathbb{E}_t[F(w_{t+1})] \leq F(w_t) - \eta\|\nabla F(w_t)\|^2 + \frac{H\eta^2}{2}\,\mathbb{E}\big[\|\nabla f(w_t; z_t)\|^2\big]$$

$$
\begin{aligned}
&\leq F(w_t) - \eta\|\nabla F(w_t)\|^2 + H\eta^2\,\mathbb{E}\big[\|\nabla f(w_t; z_t) - \nabla F(w_t)\|^2\big] + H\eta^2\|\nabla F(w_t)\|^2 \\
&\leq F(w_t) - \big(\eta - H\eta^2\big)\|\nabla F(w_t)\|^2 + H\eta^2\sigma^2,
\end{aligned}
$$

where the inequality in the second line holds due to Triangle inequality, and the third line follows from plugging in the fact that $\mathbb{E}\big[\|\nabla f(w_t; z_t) - \nabla F(w_t)\|^2\big] \leq \sigma^2$. Using the fact that $\eta \leq 1/2H$, we get that

$$
\mathbb{E}_t[F(w_{t+1})] \leq F(w_t) - \frac{\eta}{2}\|\nabla F(w_t)\|^2 + H\eta^2\sigma^2.
$$

Taking expectation on both the sides, telescoping the above for t from 1 to n, and rearranging the terms, we get that

$$
\begin{aligned}
\mathbb{E}\left[\frac{1}{n}\sum_{t=1}^{n}\|\nabla F(w_t)\|^2\right] &\leq \frac{F(w_1) - F(w_{n+1})}{\eta n} + \eta H \\
&\leq \frac{F(w_1)}{\eta n} + \eta H.
\end{aligned}
$$

Setting $\eta = \frac{\sqrt{F(w_t)}}{\sqrt{Hn}}$ implies that

$$
\mathbb{E}\left[\frac{1}{n}\sum_{t=1}^{n}\|\nabla F(w_t)\|^2\right] \leq \sqrt{\frac{F(w_1)H}{n}}.
$$

Finally, an application of Jensen's inequality implies that

$$
\mathbb{E}\left[\frac{1}{n}\sum_{t=1}^{n}\|\nabla F(w_t)\|\right] \leq \left(\frac{F(w_1)H}{n}\right)^{1/4}.
$$

Thus, concluding the proof for the returned point $\widehat{w}$. □

CHAPTER 3

LEARNING BY FINDING STATIONARY POINTS

The last decade has seen a string of empirical successes for gradient-based algorithms solving large scale non-convex machine learning problems (Krizhevsky et al., 2012; He et al., 2016). Inspired by these successes, the theory community has begun to make progress on understanding when gradient-based methods succeed for non-convex learning in certain settings of interest (Jain et al., 2017b). The goal of this chapter is to introduce learning-theoretic tools to—in a general sense—improve our understanding of when and why gradient-based methods succeed for non-convex learning problems.

The first-order optimization algorithm used in practice learn by optimizing the training loss $\widehat{F}_n$. If these algorithms succeed at minimizing $\widehat{F}_n$, classical statistical learning theory provides a comprehensive set of tools, like uniform convergence, to bounds the excess risk of the procedure. Uniform convergence essentially bounds the gap between the training loss and the test loss uniformly over the set $\mathcal{W}$ by

$$\sup_{w \in \mathcal{W}} \left| F(w) - \widehat{F}_n(w) \right| \leq \widetilde{O}\left(\sqrt{\frac{\mathrm{comp}(\mathcal{W})}{n}} \right),$$

where $\mathrm{comp}(\mathcal{W})$ denotes the complexity of the parameter class $\mathcal{W}$. Thus, when the class $\mathcal{W}$ has a small complexity, points $\widehat{w}$ that minimize the training loss are also approximate minimizers of the test loss, and thus have small excess risk. The caveat is that when F is non-convex, finding global minimizers of the training loss may be far from easy. It is not typically viable to even *verify* whether one is at a global minimizer of $\widehat{F}_n$. In the worst case, minimizing F or $\widehat{F}_n$ is simply intractable.

However, recent years have seen a number of successes showing that for non-convex

problems arising in machine learning, stochastic first-order algorithms can succeed both in theory and in practice (see Jain et al. (2017b) for a survey). Notably, while minimizing $\widehat{F}_n$ might be challenging, there is an abundance of gradient methods (Nesterov, 2013; Ghadimi and Lan, 2013; Reddi et al., 2016b; Allen-Zhu and Hazan, 2016; Lei et al., 2017) that provably find approximate stationary points of the training loss, i.e. points $\widehat{w}$ for which

$$\|\nabla \widehat{F}_n(w)\| \leq \varepsilon. \tag{3.1}$$

In view of this, this chapter has two aims: *First*, to provide a general set of tools to prove uniform convergence results for gradients, with the goal of bounding how many samples are required to ensure that with high probability over samples,

$$\sup_{w \in \mathcal{W}} \Big| \|\nabla F(w)\| - \|\widehat{\nabla} F_n(w)\| \Big| \leq \epsilon. \tag{3.2}$$

(3.2) implies that approximate stationary points of the training loss are also approximate stationary points of the test loss. *Second,* to explore concrete geometrical properties for the test loss under which one can establish that the excess risk $F(\widehat{w}) - F^\star$ is small a consequence of optimizing the training loss, and the gradient uniform convergence. Together, these two yield direct bounds on the convergence of non-convex gradient-based learning algorithms to points that have low excess risk.

3.1 Toolkit: Uniform convergence of gradients

In this section, we provide a general set of tools to prove uniform convergence results for gradients, with the goal of bounding how many samples are required to

ensure that with high probability over samples, we have that

$$\sup_{w \in \mathcal{W}} \Big| \|\nabla F(w)\| - \|\nabla \widehat{F}_n(w)\| \Big| \leq \varepsilon.$$

To achieve the above, we bring vector-valued Rademacher complexities (Maurer, 2016) and associated vector-valued contraction principles to bear on the analysis of uniform convergence for gradients. This approach enables *norm-based capacity control*, meaning that the bounds are independent of dimension whenever the predictor norm and data norm are appropriately controlled. We introduce a "chain rule" for Rademacher complexity, which enables one to decompose the complexity of gradients of compositions into complexities of their components, and makes deriving dimension-independent complexity bounds for common non-convex classes quite simple.

We start by giving a quick primer on tools and techniques for uniform convergence of functions.

3.1.1 Primer: Uniform convergence of function value

Uniform convergence of scalar valued function has been a well studied topic in learning theory **?**, and provides tools for bounding the error between empirical averages and the expected value uniformly for every function in a scalar valued function class $\mathcal{G} \subseteq (\mathcal{Z} \mapsto \mathbb{R})$. We recall the following classical result for uniform convergence.

Theorem 3 (Bartlett et al. (2005), Theorem A.2/Lemma A.5)**.** *Let $\mathcal{G} \subseteq (\mathcal{Z} \to \mathbb{R})$ be a class of functions. Let $z_1, \ldots, z_n$ be sampled i.i.d. for some distribution $\mathcal{D}$.*

Then with probability at least $1-\delta$ *over the draw of* $z_{1:n}$*,*

$$\sup_{g\in\mathcal{G}}\left|\mathbb{E}_z\, g(z)-\frac{1}{n}\sum_{t=1}^{n} g(z_t)\right| \leq 4\,\mathbb{E}_\epsilon \sup_{g\in\mathcal{G}}\frac{1}{n}\sum_{t=1}^{n}\epsilon_t g(z_t)+4\sup_{g\in\mathcal{G}}\sup_{z\in\mathcal{Z}}|g(z)|\cdot\frac{\log\left(\frac{2}{\delta}\right)}{n}. \quad (3.3)$$

The first term in the right-hand side above is called the *Rademacher Complexity* of the function class $\mathcal{G}$, and various works including **?** provide tools and techniques, e.g. contraction lemma, to bound the Rademacher complexity for various function classes of interest.

Lemma 1 (Contraction Lemma (Ledoux and Talagrand, 1991))**.** *Let* $\mathcal{G}$ *be any scalar-valued function class and* $\phi_1,\ldots,\phi_n$ *be any sequence of functions where* $\phi_t:\mathbb{R}\to\mathbb{R}$ *is L-Lipschitz. Then*

$$\mathbb{E}_\epsilon \sup_{g\in\mathcal{G}}\sum_{t=1}^{n}\epsilon_t\phi_t(g(x_t)) \leq L\cdot\mathbb{E}_\epsilon \sup_{g\in\mathcal{G}}\sum_{t=1}^{n}\epsilon_t g(x_t). \quad (3.4)$$

The proof of Theorem 3 is based on a standard symmetrization trick in learning theory, and the obtained result implies that the rate at which the training loss converges to the test loss can be bounded uniformly for any function $g\in\mathcal{G}$ by the Rademacher complexity of the class $\mathcal{G}$. Thus, for function classes with small Rademacher complexity, favorable uniform convergence bounds can be obtained.

Before moving further, we note that while Theorem 3 is defined for arbitrary function classes $\mathcal{G}$, the result is immediately applicable to our setting by defining

$$\mathcal{G}=\{g_w(\cdot)\mid w\in\mathcal{W}\},$$

where we define $g_w(z)=f(w;z)$.

3.1.2 Vector-Rademacher complexities and uniform convergence

Our focus in this chapter is to develop tools to bound the gap between the gradients of the training loss and the test loss (i.e. ensure that (3.2) is small). The starting point for our uniform convergence bounds for gradients is to apply the standard tool of symmetrization—a vector-valued version, to be precise. We first introduce a *normed* variant of Rademacher complexity.

Definition 6 (Normed Rademacher Complexity)**.** *Given a vector valued class of function $\mathcal{G}$ that maps the space $\mathcal{Z}$ to a vector space equipped with norm $\|\cdot\|$, we define the normed Rademacher complexity for $\mathcal{G}$ on instances $z_{1:n}$ via*

$$\mathfrak{R}_{\|\cdot\|}(\mathcal{G}\,;z_{1:n}) := \mathbb{E}_{\epsilon}\sup_{g\in\mathcal{G}}\left\|\sum_{t=1}^{n}\epsilon_t g(z_t)\right\|. \tag{3.5}$$

The key tool used to prove uniform convergence bounds is the *vector-valued Rademacher complexity* due to Maurer (2016).

Definition 7. *For a function class $\mathcal{G}\subseteq\left(\mathcal{Z}\to\mathbb{R}^K\right)$, the vector-valued Rademacher complexity is*

$$\overrightarrow{\mathfrak{R}}(g\,;z_{1:n}) := \mathbb{E}_{\boldsymbol{\epsilon}}\sup_{g\in\mathcal{G}}\sum_{t=1}^{n}\langle\boldsymbol{\epsilon}_t, g(z_t)\rangle. \tag{3.6}$$

The vector-valued Rademacher complexity arises through an elegant contraction trick due to Maurer.

Theorem 4 (Vector-valued contraction (Maurer, 2016))**.** *Let $\mathcal{G}\subseteq(\mathcal{Z}\to\mathbb{R}^K)$, and let $h_t:\mathbb{R}^K\to\mathbb{R}$ be a sequence of functions for $t\in[n]$, each of which is L-Lipschitz with respect to ℓ_2. Then*

$$\mathbb{E}_{\epsilon}\sup_{g\in\mathcal{G}}\sum_{t=1}^{n}\epsilon_t h_t(g(z_t)) \le \sqrt{2}L\cdot\overrightarrow{\mathfrak{R}}(\mathcal{G}\,;z_{1:n}). \tag{3.7}$$

With these definitions, we are ready to provide a straightforward generalization of the standard real-valued symmetrization lemma Theorem 3 for vector-valued functions.

Lemma 2 (Uniform convergence for vector-valued functions)**.** *Let* $\mathcal{G} \subseteq \{g : \mathcal{Z} \to \mathfrak{B}\}$ *for arbitrary set* $\mathcal{Z}$*, and vector space* $\mathfrak{B}$ *with norm* $\|\cdot\|$*. Let* $z_1, \ldots, z_n$ *be sampled i.i.d. from some distribution* $\mathcal{D}$*. Then with probability at least* $1 - \delta$ *over the draw of* $z_{1:n}$*,*

$$\sup_{g \in \mathcal{G}} \left\| \mathbb{E}_z\, g(z) - \frac{1}{n} \sum_{t=1}^{n} g(z_t) \right\| \leq 4\, \mathbb{E}_\epsilon \sup_{g \in \mathcal{G}} \left\| \frac{1}{n} \sum_{t=1}^{n} \epsilon_t g(z_t) \right\| + 4 \sup_{g \in \mathcal{G}} \sup_{Z \in \mathcal{Z}} \|g(z)\| \cdot \frac{\log\left(\frac{2}{\delta}\right)}{n} \tag{3.8}$$

for some absolute constant $c > 0$*.*

Proof. This result follows immediately by applying Theorem 3 to the expanded function class $\mathcal{F} := \{Z \mapsto \langle g(Z), v \rangle \mid g \in \mathcal{G}, \|v\|_\star \leq 1\}$. □

Notice that the key difference between (3.8) and (3.3) is that the Rademacher complexity term is replaced by the normed Rademacher complexity in order to account for vector-valued functions. An invocation of Lemma 2 for our problem setting gives us the desired bound on the uniform convergence of gradients. Define the function class $\mathcal{G}$ as the class of vector-valued functions

$$\mathcal{G} = \{g_w(\cdot) \mid w \in \mathcal{W}\},$$

where $g_w(z) = \nabla f(w; z)$, i.e. $\mathcal{G} = \nabla f \circ \mathcal{W}$. Thus, using Lemma 2 with the above definition of $\mathcal{G}$ gives us the desired uniform convergence of gradients result.

Theorem 5 (Uniform convergence of gradients)**.** *For any* $\delta > 0$*, with probability at least* $1 - \delta$ *over the data* $\{(x_t, y_t)\}_{t=1}^n$*,*

$$\mathbb{E} \sup_{w \in \mathcal{W}} \left\| \nabla \widehat{F}_n(w) - \nabla F(w) \right\| \leq \frac{4}{n} \cdot \mathfrak{R}_{\|\cdot\|}(\nabla f \circ \mathcal{W}\,; x_{1:n}, y_{1:n}) + c \cdot \frac{\log\left(\frac{1}{\delta}\right)}{n}, \tag{3.9}$$

where the constant c depends only on the range of $\|\nabla f\|$.

Next, we will provide various useful tools and techniques to bound the *normed* Rademacher complexity for the function class $\nabla f \circ \mathcal{W}$, appearing the uniform convergence bound above, for various function classes of interest.

3.1.3 Useful tools to bound vector-Rademacher Complexities

In many cases of interest, the function f may itself be a composition of simpler functions. To bound the complexity of $\nabla f \circ \mathcal{W}$ for such classes, we introduce a chain rule for the normed Rademacher complexity that allows to easily control gradients of composition of functions.

Theorem 6 (Chain Rule for Rademacher Complexity)**.** *Let sequences of functions $g_t : \mathbb{R}^K \to \mathbb{R}$ and $h_t : \mathbb{R}^d \to \mathbb{R}^K$ be given. Suppose there are constants L_g and L_h such that for all $1 \le t \le n$, $\|\nabla g_t\|_2 \le L_G$ and $\sqrt{\sum_{k=1}^K \|\nabla f_{t,k}(w)\|^2} \le L_F$. Then,*

$$\frac{1}{2}\,\mathbb{E}_\epsilon \sup_{w\in\mathcal{W}} \left\| \sum_{t=1}^n \epsilon_t \nabla(g_t(h_t(w))) \right\| \le L_F\,\mathbb{E}_{\boldsymbol{\epsilon}} \sup_{w\in\mathcal{W}} \sum_{t=1}^n \langle \boldsymbol{\epsilon}_t, \nabla g_t(h_t(w))\rangle + L_G\,\mathbb{E}_{\boldsymbol{\epsilon}} \sup_{w\in\mathcal{W}} \left\| \sum_{t=1}^n \nabla h_t(w)\boldsymbol{\epsilon}_t \right\|, \tag{3.10}$$

where ∇h_t denotes the Jacobian of h_t which lives in $\mathbb{R}^{d\times K}$, and $\boldsymbol{\epsilon} \in \{\pm 1\}^{K\times n}$ is a matrix of Rademacher random variables with $\boldsymbol{\epsilon}_t$ denoting the tth column

Proof of Theorem 6. We write

$$\mathbb{E}_\epsilon \sup_{w\in\mathcal{W}} \left\| \sum_{t=1}^n \epsilon_t \nabla(G_t(F_t(w))) \right\| = \mathbb{E}_\epsilon \sup_{w\in\mathcal{W}} \sup_{v\in\mathfrak{B}^\star : \|v\|_\star \le 1} \sum_{t=1}^n \epsilon_t \langle \nabla(G_t(F_t(w))), v\rangle,$$

Using the chain rule for differentiation we have

$$\langle \nabla(G_t(F_t(w))), v\rangle = \big\langle (\nabla G_t)(F_t(w)), (\langle \nabla F_{t,k}(w), v\rangle)_{k\in[K]}\big\rangle.$$

We now introduce new functions that relabel the quantities in this expression. Let $h : \mathbb{R}^{2K} \to \mathbb{R}$ be given by $h(a,b) = \langle a, b\rangle$, let $f_1 : \mathcal{W} \to \mathbb{R}^K$ be given by $f_1(w) = (\nabla G_t)(F_t(w))$ and f_2 be given by $f_2(w,v) = (\langle \nabla F_{t,k}(w), v\rangle)_{k\in[K]}$. We apply the block-wise contraction lemma Lemma 4 with one block for f_1 and one block for f_2 to conclude

$$\begin{aligned}
&\mathbb{E}_\epsilon \sup_{w\in\mathcal{W}} \sup_{v\in\mathfrak{B}^\star:\|v\|_\star\le 1} \sum_{t=1}^n \epsilon_t h(f_1(w), f_2(w,v)) \\
&\le 2L_F\, \mathbb{E}_\epsilon \sup_{w\in\mathcal{W}} \sup_{v\in\mathfrak{B}^\star:\|v\|_\star\le 1} \sum_{t=1}^n \langle \boldsymbol{\epsilon}_t, f_1(w)\rangle + 2L_G\, \mathbb{E}_\epsilon \sup_{w\in\mathcal{W}} \sup_{v\in\mathfrak{B}^\star:\|v\|_\star\le 1} \sum_{t=1}^n \langle \boldsymbol{\epsilon}_t, f_2(w,v)\rangle,
\end{aligned}$$

which establishes the result after expanding terms. All that must be verified is that the assumptions on the norm bounds for ∇G_t and ∇F_t in the theorem statement ensure the the Lipschitz requirement in the statement of Lemma 4 is met. □

In Section 3.2, the concrete learning settings that we study—generalized linear models and robust regression–involve composing non-convex losses and non-linearities or transfer functions with a linear predictor. That is, $f(w; x_t, y_t)$ can be written as $f(w; x_t, y_t) = g_t(h_t(w))$ where $g_t(a)$ is some L-Lipschitz function that possibly depends on x_t and y_t and $f_t(w) = \langle w, x_t\rangle$. In this case, the chain rule for derivatives gives us that $\nabla f(w; x_t, y_t) = g_t'(h_t(w)) \cdot \nabla h_t(w) = g_t'(\langle w, x_t\rangle))x_t$. Using the chain rule (with $K = 1$), we conclude that

$$\mathbb{E}_\epsilon \sup_{w\in\mathcal{W}} \left\| \sum_{t=1}^n \epsilon_t \nabla f(w\,; x_t, y_t) \right\| \le \mathbb{E}_\epsilon \left[\sup_{w\in\mathcal{W}} \sum_{t=1}^n \epsilon_t g_t'(\langle w, x_t\rangle)) \right] + L \cdot \mathbb{E}_\epsilon \left\| \sum_{t=1}^n \epsilon_t x_t \right\|.$$

Thus, we can reduced the problem to controlling the Rademacher average for a real valued function class of linear predictors and controlling the vector-valued random average $\mathbb{E}_\epsilon \|\sum_{t=1}^n \epsilon_t x_t\|$. The first term is handled using classical Rademacher

complexity tools **?**. As for the second term, it is a standard result (Pisier (1975); see Kakade et al. (2009) for discussion in the context of learning theory) that for all smooth Banach spaces, and more generally Banach spaces of Rademacher type 2, one has $\mathbb{E}_\epsilon \|\sum_{t=1}^n \epsilon_t x_t\| = O(\sqrt{n})$. We provide more details on this in Theorem 7, but first define smooth vector spaces.

Definition 8. *For any vector space $\mathcal{V}$, a convex function $\Psi : \mathcal{V} \to \mathbb{R}$ is β-smooth with respect to a norm $\|\cdot\|$ if*

$$\Psi(x) \leq \Psi(y) + \langle \nabla \Psi(y), x - y \rangle + \frac{\beta}{2}\|x - y\|^2 \quad \forall x, y \in \mathcal{V}.$$

A norm $\|\cdot\|$ is said to be β-smooth if the function $\Psi(x) = \frac{1}{2}\|x\|^2$ is β-smooth with respect to $\|\cdot\|$.

Theorem 7. *Let $\|\cdot\|$ be any norm for which there exists Ψ such that $\Psi(x) \geq \frac{1}{2}\|x\|^2$, $\Psi(0) = 0$, and Ψ is β-smooth with respect to $\|\cdot\|$. Then*

$$\mathbb{E}_\epsilon \left\| \sum_{t=1}^n \epsilon_t x_t \right\| \leq \sqrt{\beta \sum_{t=1}^n \|x_t\|^2}.$$

The reader may consult Pinelis (1994) for a high-probability version of this theorem.

Fact 1. The following spaces and norms satisfy the preconditions of Theorem 7:

- $(\mathbb{R}^d, \ell_p)$ for $p \geq 2$, with $\beta = p - 1$ (Kakade et al., 2009).
- $(\mathbb{R}^d, \ell_\infty)$, with $\beta = O(\log d)$ (Kakade et al., 2009).
- $(\mathbb{R}^{d_1 \times d_2}, \|\cdot\|_\sigma)$, with $\beta = O(\log(d_1 + d_2))$ (Kakade et al., 2012).

Proof of Theorem 7. Using Jensen's inequality and the upper bound property

of Ψ we have

$$\mathbb{E}_\epsilon \left\| \sum_{t=1}^{n} \epsilon_t x_t \right\| \leq \sqrt{\mathbb{E}_\epsilon \left\| \sum_{t=1}^{n} \epsilon_t x_t \right\|^2} \leq \sqrt{2} \cdot \sqrt{\mathbb{E}_\epsilon \, \Psi\left(\sum_{t=1}^{n} \epsilon_t x_t \right)}.$$

Applying the smoothness property at time n, and using that ϵ_n is independent of $\epsilon_1, \ldots, \epsilon_{n-1}$:

$$\begin{aligned}
\sqrt{\mathbb{E}_\epsilon \, \Psi\left(\sum_{t=1}^{n} \epsilon_t x_t \right)} &\leq \sqrt{\mathbb{E}_\epsilon \left[\Psi\left(\sum_{t=1}^{n-1} \epsilon_t x_t \right) + \left\langle \nabla \Psi\left(\sum_{t=1}^{n-1} \epsilon_t x_t \right), \epsilon_n x_n \right\rangle + \frac{\beta}{2} \|x_n\|^2 \right]} \\
&= \sqrt{\mathbb{E}_\epsilon \, \Psi\left(\sum_{t=1}^{n-1} \epsilon_t x_t \right) + \frac{\beta}{2} \|x_n\|^2}.
\end{aligned}$$

The result follows by repeating this argument from time $t = n - 1$ to $t = 1$. □

We next provided some useful contraction lemmas for vector-valued Rademacher complexity. The following is a weighted generalization of the vector-valued Lipschitz contraction inequality.

Lemma 3. *Let $\mathcal{F} \subseteq (\mathcal{X} \to \mathbb{R}^K)$, and let $h_t : \mathbb{R}^K \to \mathbb{R}$ be a sequence of functions for $t \in [n]$. Suppose each h_t is 1-Lipschitz with respect to $\|z\|_{A_t} := \sqrt{\langle z, A_t z \rangle}$, where $A_t \in \mathbb{R}^{K \times K}$ is positive semidefinite. Then*

$$\mathbb{E}_\epsilon \sup_{f \in \mathcal{F}} \sum_{t=1}^{n} \epsilon_t h_t(f(x_t)) \leq \sqrt{2} \, \mathbb{E}_{\boldsymbol{\epsilon}} \sup_{f \in \mathcal{F}} \sum_{t=1}^{n} \left\langle \boldsymbol{\epsilon}_t, A_t^{1/2} f(x_t) \right\rangle. \tag{3.11}$$

Proof sketch for Lemma 3. Same proof as Theorem 3 in Maurer (2016), with the additional observation that $\|z\|_{A_t} = \|A_t^{1/2} z\|_2$. □

Lemma 4. *Let $\mathcal{G}$ be a class of vector-valued functions whose output space forms M blocks of vectors, i.e. each $g \in \mathcal{G}$ has the form $g : \mathcal{Z} \to \mathbb{R}^{d_1 + d_2 + \cdots + d_M}$, where $g(z)_i \in \mathbb{R}^{d_i}$ denotes the ith block. Let $h_t : \mathbb{R}^{d_1 + d_2 + \cdots + d_M} \to \mathbb{R}$, be a sequence of functions for $t \in [n]$ that satisfy the following block-wise Lipschitz property: For*

any assignment $a_1, \ldots, a_M$ with each $a_i \in \mathbb{R}^{d_i}$, $h_t(a_1, \ldots, a_M)$ is L_i-Lipschitz with respect to a_i in the ℓ_2 norm. Then

$$\mathbb{E}_\epsilon \sup_{g \in \mathcal{G}} \sum_{t=1}^{n} h_t(g_1(z_t), \ldots, g_M(z_t)) \leq \sqrt{2M} \sum_{i=1}^{M} L_i \, \mathbb{E}_{\boldsymbol{\epsilon}} \sup_{g \in \mathcal{G}} \sum_{t=1}^{n} \langle \boldsymbol{\epsilon}_t, g_i(z_t) \rangle.$$

Proof. Immediate consequence of Lemma 3, along with sub-additivity of the supremum. □

We conclude by noting that while our applications require only gradient uniform convergence, we anticipate that the tools of this section will find use in settings where convergence of higher-order derivatives, e.g. Hessian, is needed to ensure success of optimization routines.

3.2 Learning via stationary point finding algorithms

Now, we turn our attention back to understanding first-order algorithms that optimize the training loss, and converge to its stationary points, i.e. the returned solution $\widehat{w}$ satisfies

$$\mathbb{E}\Big[\|\nabla \widehat{F}_n(\widehat{w})\|\Big] \leq \epsilon(n). \tag{3.12}$$

We first note that under uniform convergence of gradients (Theorem 5), the above implies that the point $\widehat{w}$ also satisfies

$$\begin{aligned}\mathbb{E}[\|\nabla F(\widehat{w})\|] &\leq \mathbb{E}\Big[\|\nabla \widehat{F}_n(\widehat{w})\|\Big] + \mathbb{E}\Big[\|\nabla \widehat{F}_n(\widehat{w}) - \nabla F(\widehat{w})\|\Big] \\ &\leq \epsilon(n) + \frac{4}{n} \cdot \mathfrak{R}_{\|\cdot\|}(\nabla f \circ \mathcal{W}\,; x_{1:n}, y_{1:n}) + c \cdot \frac{\log\left(\frac{1}{\delta}\right)}{n}.\end{aligned}$$

Thus, when $\mathfrak{R}_{\|\cdot\|}(\nabla f \circ \mathcal{W}\,; x_{1:n}, y_{1:n}$ is small, the returned solution is also an approximate stationary point of the test loss. In the next section, we will see the implications of convergence to stationary points for learning.

3.2.1 Gradient dominance and learning

We consider the implications of convergence to stationary points for learning, for test losses that satisfy *Gradient Dominance* (GD) condition.

Definition 9. *The population risk F satisfies the (α, μ)-Gradient Domination condition with respect to a norm $\|\cdot\|$ if there are constants $\mu > 0$, $\alpha \in [1, 2]$ such that*

$$F(w) - F(w^\star) \leq \mu \|\nabla F(w)\|^\alpha \quad \forall w \in \mathcal{W}, \tag{GD}$$

where $w^\star \in \operatorname{argmin}_{w \in \mathcal{W}} F(w)$ is any population risk minimizer.

Gradient Dominance (GD) is a popular structural assumption in the literature. The general GD condition implies that all critical points are global, and is itself implied (under technical restrictions) by many other well-known conditions including one-point convexity (Li and Yuan, 2017), star convexity and τ-star convexity (Hardt et al., 2018), and so-called "regularity conditions" (Zhang et al., 2016); for more see Karimi et al. (2016a). The case $\alpha = 2$ is often referred to as the Polyak-Łojasiewicz inequality (Polyak, 1963a; Karimi et al., 2016a). The GD condition is satsified—sometimes locally rather than globally, and usually under distributional assumptions— by the population risk in settings including neural networks with one hidden layer (Li and Yuan, 2017), ResNets with linear activations (Hardt and Ma, 2017), phase retrieval (Zhang et al., 2016), matrix factorization (Liu et al., 2016), blind deconvolution (Li et al., 2018), and—as we show in Section 3.2.2—generalized linear models and robust regression.

The GD condition states that to optimize the population risk it suffices to find a (population) stationary point. What are the consequences of the statement for the learning problem, given that the learner only has access to the empirical risk $\widehat{F}_n$

which itself may not satisfy GD? The next proposition shows, via gradient uniform convergence, that GD is immediately useful for non-convex learning even when it is only satisfied at the population level.

Proposition 1. *Suppose that F satisfies the (α, μ)-GD condition. Then, for any $\delta > 0$, with probability at least $1 - \delta$ over the draw of the data $\{(x_t, y_t)\}_{t=1}^n$, every algorithm $\mathbb{A}$ satisfies*

$$F(\widehat{w}) - F^\star \leq 2\ \mu \left(\left\| \nabla \widehat{F}_n(\widehat{w}) \right\|^\alpha + \mathbb{E} \sup_{w \in \mathcal{W}} \left\| \nabla \widehat{F}_n(w) - \nabla F(w) \right\|^\alpha + c \left(\frac{\log\left(\frac{1}{\delta}\right)}{n} \right)^{\frac{\alpha}{2}} \right), \tag{3.13}$$

where $\widehat{w}$ denotes the output of $\mathbb{A}(S)$, and the constant c depends only on the range of $\|\nabla f\|$.

Note that if $\mathcal{W}$ is a finite set, then standard concentration arguments for norms along with the union bound imply that $\mathbb{E} \sup_{w \in \mathcal{W}} \|\nabla \widehat{F}_n(w) - \nabla F(w)\| \leq O\left(\sqrt{\frac{\log |\mathcal{W}|}{n}}\right)$. For smooth losses, if $\mathcal{W} \subset \mathbb{R}^d$ is contained in a bounded ball, then by simply discretizing the set $\mathcal{W}$ up to precision ε (with $O(\varepsilon^{-d})$ elements), one can easily obtain a bound of $\mathbb{E} \sup_{w \in \mathcal{W}} \|\nabla \widehat{F}_n(w) - \nabla F(w)\| \leq O\left(\sqrt{\frac{d}{n}}\right)$. Our goal is to go beyond this type of analysis and provide dimension-free rates that apply even when the dimension is larger than the number of examples, or possibly infinite. Our bounds take the following "*norm-based capacity control*" form:

$$\mathbb{E} \sup_{w \in \mathcal{W}} \left\| \nabla \widehat{F}_n(w) - \nabla F(w) \right\| \leq O\left(\sqrt{\frac{\mathrm{comp}(\mathcal{W})}{n}} \right), \tag{3.14}$$

where $\mathrm{comp}(\mathcal{W})$ is a norm-dependent, but dimension-independent measure of the size of $\mathcal{W}$. Given such a bound, any algorithm that guarantees $\|\nabla \widehat{F}_n(\widehat{w}^{\mathrm{alg}})\| \leq O\left(\frac{1}{\sqrt{n}}\right)$ for a (α, μ)-GD loss will obtain an overall excess risk bound of order $O\left(\frac{\mu}{n^{\alpha/2}}\right)$. For $(1, \mu_1)$-GD this translates to an overall $O\left(\frac{\mu_1}{\sqrt{n}}\right)$ rate, whereas $(2, \mu_2)$-GD implies a $O\left(\frac{\mu_2}{n}\right)$ rate. The first rate becomes favorable when $\mu_1 \leq \sqrt{n} \cdot \mu_2$ which

typically happens for very high dimensional problems. For the examples we study in the next section, μ_1 is related only to the radius of the set $\mathcal{W}$, while μ_2 depends inversely on the smallest eigenvalue of the population covariance and so is well-behaved only for low-dimensional problems unless one makes strong distributional assumptions.

An important feature of the above analysis is that we need to establish the GD condition only for the test loss F; for the examples we consider this is easy as long as we assume the model is well-specified. Once this is done, our convergence results hold for *any* algorithm that works on the dataset S and finds an approximate first-order stationary point with $\|\nabla \widehat{F}_n(\widehat{w})\| \leq \varepsilon$ of the training loss. As we discussed in Section 2.1, first-order algorithms that find approximate stationary points assuming only smoothness of the loss have enjoyed a surge of recent interest (Ghadimi and Lan, 2013; Reddi et al., 2016b; Allen-Zhu and Hazan, 2016; Allen-Zhu, 2018).

In the next section we instantiate the general gradient uniform convergence tools we developed so far, and the Gradient Dominance (GD) condition to derive optimization consequences for: generalized linear models and robust regression.[1]

3.2.2 Application: Generalized Linear Models

We first consider the problem of learning a generalized linear model with the square loss.[2] Fix a norm $\|\cdot\|$, take $\mathcal{X} = \left\{x \in \mathbb{R}^d \mid \|x\| \leq R\right\}$, $\mathcal{W} = \left\{w \in \mathbb{R}^d \mid \|w\|_\star \leq B\right\}$,

[1]These problems were previously studied by Mei et al. (2016), however their uniform convergence bounds has a linear dependence on d, which restricts the applicability of their results for high-dimensional problems. In contract, we give improved dimension-free rates of convergence. We note that using Proposition 1 by simply discretizing $\mathcal{W}$ and using uniform convergence following standard concentration arguments recovers their d-dependent rates.

[2]Mei et al. (2016) refer to the model as "binary classification", since σ can model conditional probabilities of two classes.

and $\mathcal{Y} = \{0, 1\}$. Choose a link function $\sigma : \mathbb{R} \to [0, 1]$ and define the loss to be $f(w\,; x, y) = (\sigma(\langle w, x\rangle) - y)^2$. Standard choices for σ include the logistic link function $\sigma(s) = (1 + e^{-s})^{-1}$ and the probit link function $\sigma(s) = \Phi(s)$, where Φ is the gaussian cumulative distribution function.

To establish the GD property and provide uniform convergence bounds, we make the following regularity assumptions on the loss.

Assumption 3 (Generalized Linear Model Regularity)**.** Let $\mathcal{S} = [-BR, BR]$.

(a) $\exists C_\sigma \geq 1$ s.t. $\max\{\sigma'(s), \sigma''(s)\} \leq C_\sigma$ for all $s \in \mathcal{S}$.

(b) $\exists c_\sigma > 0$ s.t. $\sigma'(s) \geq c_\sigma$ for all $s \in \mathcal{S}$.

(c) $\mathbb{E}[y \mid x] = \sigma(\langle w^\star, x\rangle)$ for some $w^\star \in \mathcal{W}$.

Assumption (a) suffices to bound the normed Rademacher complexity $\mathfrak{R}_{\|\cdot\|}(\nabla f \circ \mathcal{W})$, and combined with (b) and (c) the assumption implies that F satisfies three variants of GD condition, and this leads to three final rates: a dimension-independent "slow rate" that holds for any smooth norm, a dimension-dependent fast rate for the ℓ_2 norm, and a sparsity-dependent fast rate that holds under an additional restricted eigenvalue assumption. This gives rise to a family of generic excess risk bounds.

To be precise, let us introduce some additional notation: $\Sigma = \mathbb{E}_x\left[xx^\top\right]$ is the data covariance matrix and $\lambda_{\min}(\Sigma)$ denotes the minimum non-zero eigenvalue. For sparsity dependent fast rates, define $\mathcal{C}(S, \alpha) := \left\{\nu \in \mathbb{R}^d \mid \|\nu_{S^C}\|_1 \leq \alpha\|\nu_S\|_1\right\}$ and let $\psi_{\min}(\Sigma) = \inf_{\nu \in \mathcal{C}(S(w^\star),1)} \frac{\langle \nu, \Sigma\nu\rangle}{\langle \nu, \nu\rangle}$ be the restricted eigenvalue.[3] Lastly, recall that a norm $\|\cdot\|$ is said to be β-smooth if the function $\Psi(x) = \frac{1}{2}\|x\|^2$ has β-Lipschitz

[3]Recall that $S(w^\star) \subseteq [d]$ is the set of non-zero entries of $w^\star$, and for any vector w, $w_S \in \mathbb{R}^d$ refers to the vector w with all entries in S^C set to zero (as in (Raskutti et al., 2010)).

gradients with respect to $\|\cdot\|$.

Theorem 8. *For the generalized linear model setting, the following excess risk inequalities each hold with probability at least $1-\delta$ over the draw of the data $\{(x_t, y_t)\}_{t=1}^n$ for any algorithm that outputs $\widehat{w}$:*

- ***Norm-Based/High-Dimensional Setup.*** *When $\mathcal{X}$ is the ball for β-smooth norm $\|\cdot\|$ and $\mathcal{W}$ is the dual ball,*

$$F(\widehat{w}) - F^\star \leq \mu_h \cdot \|\nabla \widehat{F}_n(\widehat{w})\| + \frac{C_h}{\sqrt{n}}.$$

- ***Low-Dimensional ℓ_2/ℓ_2 Setup.*** *When $\mathcal{X}$ and $\mathcal{W}$ are both ℓ_2 balls:*

$$F(\widehat{w}) - F^\star \leq \frac{1}{\lambda_{\min}(\Sigma)}\left(\mu_l \cdot \|\nabla \widehat{F}_n(\widehat{w})\|^2 + \frac{C_l}{n}\right).$$

- ***Sparse ℓ_∞/ℓ_1 Setup.*** *When $\mathcal{X}$ is the ℓ_∞ ball, $\mathcal{W}$ is the ℓ_1 ball, and $\|w^\star\|_1 = B$:*[4]

$$F(\widehat{w}) - F^\star \leq \frac{\|w^\star\|_0}{\psi_{\min}(\Sigma)}\left(\mu_s \cdot \|\nabla \widehat{F}_n(\widehat{w})\|^2 + \frac{C_s}{n}\right).$$

The quantities $C_h/C_l/C_s$ and $\mu_h/\mu_l/\mu_s$ are constants depending on $(B, R, C_\sigma, c_\sigma, \beta, \log(\delta^{-1}))$ but not explicitly on dimension (beyond logarithmic factors) or complexity of the class $\mathcal{W}$ (beyond B and R).

Precise statements for the problem dependent constants in Theorem 8 including dependence on the norms R and B can be found in Section 3.2.1.

We next formally introduce the robust regression setting and provide a similar guarantee.

[4]The constraint $\|w^\star\|_1 = B$ simplifies analysis of generic algorithms in the vein of the constrained LASSO (Tibshirani et al., 2015).

Model	Algorithm	Sample Complexity	
		Norm-based / Infinite dim.	Low-dim.
GLM	Proposition 2	$O(\varepsilon^{-2})$	$O(d\varepsilon^{-1})$
	Mei et al. (2016) Theorem 4	n/a	$O(d\varepsilon^{-1})$
	GLMtron (Kakade et al., 2011)	$O(\varepsilon^{-2})$	n/a
Robust Regression	Proposition 2	$O(\varepsilon^{-2})$	$O(d\varepsilon^{-1})$
	Mei et al. (2016) Theorem 6	n/a	$O(d\varepsilon^{-1})$

Table 3.1: Sample complexity comparison for generalized linear models and robust regression. Highlighted cells indicate optimal sample complexity.

3.2.3 Application: Robust Regression

Fix a norm $\|\cdot\|$ and take $\mathcal{X} = \{x \in \mathbb{R}^d \mid \|x\| \le R\}$, $\mathcal{W} = \{w \in \mathbb{R}^d \mid \|w\|_\star \le B\}$, and $\mathcal{Y} = [-Y, Y]$ for some constant Y. We pick a potentially non-convex function $\rho : \mathbb{R} \to \mathbb{R}_+$ and define the loss via $f(w\,; x, y) = \rho(\langle w, x\rangle - y)$. Non-convex choices for ρ arise in robust statistics, with a canonical example being Tukey's biweight loss.[5] While optimization is clearly not possible for arbitrary choices of ρ, the following assumption is sufficient to guarantee that the population risk F satisfies the GD property.

Assumption 4 (Robust Regression Regularity)**.** Let $\mathcal{S} = [-(BR+Y), (BR+Y)]$.

(a) $\exists C_\rho \ge 1$ s.t. $\max\{\rho'(s), \rho''(s)\} \le C_\rho$ for all $s \in \mathcal{S}$.

(b) ρ' is odd with $\rho'(s) > 0$ for all $s > 0$ and $h(s) := \mathbb{E}_\zeta[\rho'(s+\zeta)]$ has $h'(0) > c_\rho$.

(c) There is $w^\star \in \mathcal{W}$ such that $y = \langle w^\star, x\rangle + \zeta$, and ζ is symmetric zero-mean

[5] For a fixed parameter $c > 0$ the biweight loss is defined via $\rho(t) = \frac{c^2}{6} \cdot \begin{cases} 1 - (1-(t/c)^2)^3, & |t| \le c. \\ 1, & |t| \ge c. \end{cases}$

given x.

Similar to the generalized linear model setup, the robust regression setup satisfies three variants of the GD depending on assumptions on the norm $\|\cdot\|$ and the data distribution.

Theorem 9. *For the robust regression setting, the following excess risk inequalities each hold with probability at least $1-\delta$ over the draw of the data $\{(x_t, y_t)\}_{t=1}^n$ for any algorithm $\widehat{w}$:*

- ***Norm-Based/High-Dimensional Setup.*** *When $\mathcal{X}$ is the ball for β-smooth norm $\|\cdot\|$ and $\mathcal{W}$ is the dual ball,*

$$F(\widehat{w}) - F^\star \leq \mu_h \cdot \left\|\nabla \widehat{F}_n(\widehat{w})\right\| + \frac{C_h}{\sqrt{n}}.$$

- ***Low-Dimensional ℓ_2/ℓ_2 Setup.*** *When $\mathcal{X}$ and $\mathcal{W}$ are both ℓ_2 balls:*

$$F(\widehat{w}) - F^\star \leq \frac{1}{\lambda_{\min}(\Sigma)}\left(\mu_l \cdot \left\|\nabla \widehat{F}_n(\widehat{w})\right\|^2 + \frac{C_l}{n}\right).$$

- ***Sparse ℓ_∞/ℓ_1 Setup.*** *When $\mathcal{X}$ is the ℓ_∞ ball, $\mathcal{W}$ is the ℓ_1 ball, and $\|w^\star\|_1 = B$:*

$$F(\widehat{w}) - F^\star \leq \frac{\|w^\star\|_0}{\psi_{\min}(\Sigma)}\left(\mu_s \cdot \left\|\nabla \widehat{F}_n(\widehat{w})\right\|^2 + \frac{C_s}{n}\right).$$

The constants $C_h/C_l/C_s$ and $\mu_h/\mu_l/\mu_s$ depend on $(B, R, C_\rho, c_\rho, \beta, \log(\delta^{-1}))$, but not explicitly on dimension (beyond log *factors) or complexity of the class $\mathcal{W}$ (beyond the range parameters B and R).*

Theorem 8 and Theorem 9 immediately imply that standard non-convex *optimization* algorithms for finding stationary points can be converted to non-convex

learning algorithms with optimal sample complexity; this is summarized by the following theorem, focusing on the "high-dimensional" and "low-dimensional" setups above in the case of the ℓ_2 norm for simplicity.

Proposition 2. *Suppose that $\Sigma \succeq \frac{1}{d} I$, $\|\cdot\| = \ell_2$. Consider the following meta-algorithm for the non-convex generalized linear model (under Assumption 3) and robust regression (under Assumption 4) setting.*

1. *Gather $n = \frac{1}{\varepsilon^2} \wedge \frac{d}{\varepsilon}$ samples $\{(x_t, y_t)\}_{t=1}^n$.*
2. *Find a point $\widehat{w} \in \mathcal{W}$ with $\|\nabla \widehat{F}_n(\widehat{w})\| \leq O\left(\frac{1}{\sqrt{n}}\right)$, which is guaranteed to exist.*

This meta-algorithm guarantees $\mathbb{E}\, F(\widehat{w}) - F^\star \leq C \cdot \varepsilon$, where C is a problem-dependent but dimension-independent constant (whenever B and R are constant).

3.3 Discussion

Connections to prior work. We first discuss connections of the learning rate guarantees for generalized linear models and robust regression via stationary-point finding algorithms, to existing work in more detail.

a) The sample complexity $O\left(\frac{1}{\varepsilon^2} \wedge \frac{d}{\varepsilon}\right)$ for Proposition 2 is optimal up to dependence on Lipschitz constants and the range parameters B and R (Tsybakov, 2008). The "high-dimensional" $O\left(\frac{1}{\varepsilon^2}\right)$ regime is particularly interesting, and goes beyond recent analyses to non-convex statistical learning (Mei et al., 2016), which use arguments involving pointwise covers of the space $\mathcal{W}$ and thus have unavoidable dimension-dependence. This highlights the power of the norm-based complexity analysis.

b) In the low-dimensional $O\left(\frac{d}{\varepsilon}\right)$ sample complexity regime, Theorem 8 and Theorem 9 recovers the rates of Mei et al. (2016) under the same assumptions—see Section **??** for details. Notably, this is the case even when the radius R is not constant. Note however that when B and R are large the constants in Theorem 8 and Theorem 9 can be quite poor. For the logistic link it is only possible to guarantee $c_\sigma \geq e^{-BR}$, and so it may be more realistic to assume BR is constant.

c) The GLMtron algorithm of Kakade et al. (2011) also obtains $O\left(\frac{1}{\varepsilon^2}\right)$ for the GLM setting. Our analysis shows that this sample complexity does not require specialized algorithms; any first-order stationary point finding algorithm will do. GLMtron has no guarantees in the $O\left(\frac{d}{\varepsilon}\right)$ regime, whereas our meta-algorithm works in both high- and low-dimensional regimes. A significant benefit of GLMtron, however, is that it does not require a lower bound on the derivative of the link function σ. It is not clear if this assumption can be removed from our analysis.

d) As an alternative approach, stochastic optimization methods for finding first-order stationary points can be used to directly find an approximate stationary point of the population risk $\|F(w)\| \leq \varepsilon$, so long as they draw a fresh sample at each step. In the high-dimensional regime it is possible to show that stochastic gradient descent (and for general smooth norms, mirror descent) obtains $O\left(\frac{1}{\varepsilon^2}\right)$ sample complexity through this approach; this is sketched in Section **??**. This approach relies on returning a randomly selected iterate from the sequence and only gives an in-expectation sample complexity guarantee, whereas Theorem 11 gives a high-probability guarantee.

Also, note that many stochastic optimization methods can exploit the $(2, \mu)$-GD condition. Suppose we are in the low-dimensional regime with $\Sigma \succeq \frac{1}{d} I$.

The fastest GD-based stochastic optimization method that we are aware of is SNVRG (Zhou et al., 2018), which under the $(2, O(d))$-GD condition will obtain ε excess risk with $O\left(\frac{d}{\varepsilon} + \frac{d^{3/2}}{\varepsilon^{1/2}}\right)$ sample complexity.

This discussion is summarized in Table 3.1.

Detailed comparison with Mei et al. (2016) Our work is inspired by Mei et al. (2016), who gave dimension-dependent gradient and Hessian convergence rates and optimization guarantees for the generalized linear model and robust regression setups we study. We next sketch in more detail the relation between the rates of Theorem 8 and Theorem 9 and those of Mei et al. (2016). We focus on the fast rate regime, and on the case $R = \sqrt{d}$ (e.g., when $x \sim \mathcal{N}(0, I_{d\times d})$).

- *Uniform convergence.* Their uniform convergence bounds scale as $O(\tau\sqrt{d/n})$, where τ is the subgaussian parameter for the data x, whereas our uniform convergence bounds scale as $O(R^2\sqrt{1/n})$. When $R = \sqrt{d}$ both bounds scale as $O(d\sqrt{1/n})$, but our bounds do not depend on d when R is constant, whereas their bound always pays $\sqrt{d}$.
- *Parameter convergence.* The final result of Mei et al. (2016) is a parameter convergence bound of the form $\|\widehat{w} - w^*\|_2 \leq O\left(\frac{\tau}{\underline{\gamma}\tau^2}\sqrt{\frac{d}{n}}\right)$ (see Theorem 4/6; Eqs. (106) and (96)). Our main result for the "low-dimensional" setup in Theorem 8 and Theorem 9 is an excess risk bound of the form $F(\widehat{w}) - F(w^*) \leq O\left(\frac{R^4}{\lambda_{\min}(\Sigma)n}\right)$ which implies a parameter convergence bound of $\|\widehat{w} - w^*\|_2 \leq \frac{R^2}{\lambda_{\min}(\Sigma)\sqrt{n}}$ (using similar reasoning as in the proof of Lemma 5 and Lemma 8). With $\tau = R = \sqrt{d}$ and Assumptions 6 and 9 in Mei et al. (2016), we have $\lambda_{\min}(\Sigma) = \underline{\gamma}\tau^2$, and so again both the bounds resolve to $O\left(\frac{d}{\lambda_{\min}(\Sigma)\sqrt{n}}\right)$.

Ensuring that the returned solution $\widehat{w} \in \mathcal{W}$. While there algorithms that provably find an approximate stationary point of the empirical risk, including gradient descent (Nesterov, 2013), SGD (Ghadimi and Lan, 2013), and Non-convex SVRG (Reddi et al., 2016b; Allen-Zhu and Hazan, 2016), these algorithms are not generically guaranteed to satisfy the constraint $\widehat{w} \in \mathcal{W}$ a-priori. We can circumvent this difficulty and take advantage of these generic algorithms by instead finding stationary points of the *regularized* empirical risk. We show that any algorithm that finds a (unconstrained) stationary point of the regularized empirical risk indeed the obtains optimal $O\big(\frac{1}{\varepsilon^2}\big)$ sample complexity in the norm-based regime.

Theorem 11 (informal)**.** *Suppose we are in the generalized linear model setting or robust regression setting. Let $\widehat{F}_n^{\lambda}(w) = \widehat{F}_n(w) + \frac{\lambda}{2}\|w\|_2^2$. For any $\delta > 0$ there is a setting of the regularization parameter λ such that any $\widehat{w}$ with $\nabla \widehat{F}_n^{\lambda}(\widehat{w}) = 0$ guarantees $F(\widehat{w}) - F^{\star} \leq \tilde{O}\left(\sqrt{\frac{\log(\delta^{-1})}{n}}\right)$ with probability at least $1 - \delta$.*

We defer the proof and formal statement to Section 3.4.2.

3.3.1 Is uniform convergence necessary for learning?

In this chapter, we investigated 1) the rate at which gradients of the empirical loss converge to their population counterparts in standard non-convex learning tasks, and 2) the consequences of this convergence for learning in non-convex generalized linear models and robust regression. As a result, we obtained optimal learning rates for both the problems via first-order algorithms that optimize the training loss and converge to its stationary points. A similar analysis may be performed to understand learning with first-order optimization algorithms in other high-dimensional non-convex problems as well. Given the simplicity of the approach we considered

in this chapter, one may perhaps wonder whether all that is needed for learning is convergence to stationary points of the training loss, followed by uniform convergence of gradients to show convergence to stationary points of the test loss, and then additional geometric properties like gradient dominance to conclude learning. Such an approach is based on the premise that gradients of the training loss converge to their population counterparts uniformly over the parameter space $\mathcal{W}$. Is uniform convergence necessary for learning? Do all learnable problem enjoy uniform convergence?

Surprisingly, the answer to whether uniform convergence is necessary for learning is negative. In particular, there exist problem instances that are learnable via SGD but uniform convergence does not hold. In fact, one can find such instances in the simpler problem setting of Stochastic Convex Optimization (SCO), where the test loss is convex. We recall the following construction from (Shalev-Shwartz et al., 2009):

SCO instance for which uniform convergences does not hold: Suppose $\mathcal{Z} = \{0,1\}^d$ and $\mathcal{W} = \left\{w \in \mathbb{R}^d \mid \|w\| \leq 1\right\}$. We define the instantaneous loss f as

$$f(w; z) = \|w \odot z\|^2, \tag{3.15}$$

where $\odot$ denotes the Hardamard product (coordinate wise product of two vectors). We first of all note that the test loss $F(w) = \mathbb{E}_{z\sim\mathcal{D}}[\|w \odot z\|]$ is convex is w and 3-Lipschitz. Furthermore, it is easy to check that $\mathbb{E}_{z\sim\mathcal{D}}[\nabla f(w; z) - \nabla F(w)] \leq 4$. Thus, the above problem is an instance of SCO and an application of Theorem 1 implies that SGD learns at the rate of $\frac{1}{\sqrt{n}}$ for any distribution $\mathcal{D} \in \Delta(\mathcal{Z})$.

However, as we will show in the next lemma this is not due to uniform convergence. We argue this by providing a distribution $\mathcal{D} \in \{0,1\}^d$ for which the training loss

does not converge uniformly to the test loss in either the function value or its gradients.

Theorem 10. *Let $\mathcal{D}$ be uniform$(\{0,1\}^d)$, and $d \geq 2^n$. Then, with constant probability over the sampling of $S \sim \mathcal{D}^n$, we have*

$$\sup_{w \in \mathcal{W}} \left| F(w) - \widehat{F}_n(w) \right| = \Omega(1).$$

Furthermore,

$$\sup_{w \in \mathcal{W}} \left\| \nabla F(w) - \nabla \widehat{F}_n(w) \right\| = \Omega(1).$$

This problem instance considered above is indeed quite interesting, since it is learnable via SGD but at the same time SGD does not converge to the stationary points of the training loss. Hence, we need to look beyond uniform convergence methods to understand the success of SGD, and other first-order optimization algorithms, for learning in high-dimensional problems. In the next chapter, we expand further on the simple counter example we discussed above to show that the situation is even worse and there are problems that are learnable using SGD, but the success of SGD can not be explained by any sort of regularization or uniform convergence. In addition to that, we will also shed light into the benefits of empirical variations on SGD like taking multiple passes and small-batch size. Finally, in Chapter 5, we will provide a new framework for understanding SGD that goes beyond uniform convergence or regularization.

3.4 Detailed proofs

3.4.1 Proofs for Section 3.2

For all proofs in this section we adopt the notation $s := \|w^\star\|_0$, and use $c > 0$ to denote an absolute constant whose precise value depends on context.

Generalized Linear Models

Proof of Theorem 8. To begin, we apply Proposition 1 and Proposition **??** to conclude that whenever (α, μ)-PL holds, with probability at least $1 - \delta$ over the examples $\{(x_t, y_t)\}_{t=1}^n$, any learning algorithm $\widehat{w}^{\mathrm{alg}} \in \mathcal{W}$ satisfies

$$F(\widehat{w}^{\mathrm{alg}}) - F^\star \leq c \cdot \mu \left(\left\| \nabla \widehat{F}_n(\widehat{w}^{\mathrm{alg}}) \right\|^\alpha + \left(\frac{\mathfrak{R}_{\|\cdot\|}(\nabla \ell \circ \mathcal{W}\,; x_{1:n}, y_{1:n})}{n} + 2C_\sigma R \sqrt{\frac{\log(1/\delta)}{n}} \right)^\alpha \right). \tag{3.16}$$

Here $c > 0$ is an absolute constant and we have used that $\|\nabla \ell(w\,; x_t, y_t)\| \leq 2C_\sigma R$.

Smooth high-dimensional setup For the general smooth norm pair setup in (3.16), Lemma 5 and Lemma 7 imply

$$\begin{aligned} F(\widehat{w}^{\mathrm{alg}}) - F^\star &\leq c \cdot \frac{BC_\sigma}{c_\sigma} \left(\left\| \nabla \widehat{F}_n(\widehat{w}^{\mathrm{alg}}) \right\| + \left(BR^2 C_\sigma^2 \sqrt{\frac{\beta}{n}} + 2C_\sigma R \sqrt{\frac{\log(1/\delta)}{n}} \right) \right) \\ &= \mu_{\mathrm{h}} \cdot \left\| \nabla \widehat{F}_n(\widehat{w}^{\mathrm{alg}}) \right\| + \frac{C_{\mathrm{h}}}{\sqrt{n}}. \end{aligned}$$

where we recall $C_{\mathrm{h}} = c \cdot \frac{B^2 R^2 C_\sigma^3 \sqrt{\beta} + 2C_\sigma^2 BR \sqrt{\log(1/\delta)}}{c_\sigma}$ and $\mu_{\mathrm{h}} = c \cdot \frac{BC_\sigma}{c_\sigma}$.

Low-dimensional ℓ_2/ℓ_2 setup For the low-dimension ℓ_2/ℓ_2 pair setup in (3.16), Lemma 5 and Lemma 7 imply

$$
\begin{aligned}
F(\widehat{w}^{\mathrm{alg}}) - F^\star &\leq c \cdot \frac{C_\sigma}{4c_\sigma^3 \lambda_{\min}(\Sigma)} \left(\left\| \nabla \widehat{F}_n(\widehat{w}^{\mathrm{alg}}) \right\|^2 + \left(BR^2 C_\sigma^2 \sqrt{\frac{1}{n}} + 2C_\sigma R \sqrt{\frac{\log(1/\delta)}{n}} \right)^2 \right) \\
&= \frac{\mu_{\mathrm{l}}}{\lambda_{\min}(\Sigma)} \cdot \left\| \nabla \widehat{F}_n(\widehat{w}^{\mathrm{alg}}) \right\|^2 + \frac{C_{\mathrm{l}}}{n \cdot \lambda_{\min}(\Sigma)},
\end{aligned}
$$

where we have used that the ℓ_2 norm is 1-smooth in Lemma 7. Recall that $C_{\mathrm{l}} = c \cdot \frac{2C_\sigma^5 R^4 B^2 + 8C_\sigma^3 R^2 \log(1/\delta)}{4c_\sigma^3}$ and $\mu_{\mathrm{l}} = c \cdot \frac{C_\sigma}{4c_\sigma^3}$.

Sparse ℓ_∞/ℓ_1 setup For the sparse ℓ_∞/ℓ_1 pair setup in (3.16), Lemma 5 and Lemma 7 imply

$$
\begin{aligned}
F(\widehat{w}^{\mathrm{alg}}) - F^\star &\leq c \cdot \frac{C_\sigma s}{c_\sigma^3 \psi_{\min}(\Sigma)} \left(\left\| \nabla \widehat{F}_n(\widehat{w}^{\mathrm{alg}}) \right\|^2 + \left(BR^2 C_\sigma^2 \sqrt{\frac{\log d}{n}} + 2C_\sigma R \sqrt{\frac{\log(1/\delta)}{n}} \right)^2 \right) \\
&= \frac{\mu_{\mathrm{s}} \cdot s}{\psi_{\min}(\Sigma)} \cdot \left\| \nabla \widehat{F}_n(\widehat{w}^{\mathrm{alg}}) \right\|^2 + \frac{s}{n} \cdot \frac{C_{\mathrm{s}}}{\psi_{\min}(\Sigma)},
\end{aligned}
$$

where we have used that the ℓ_∞ norm has the smoothness property with $\beta = O(\log(d))$ in Lemma 7. Recall that $C_{\mathrm{s}} = c \cdot \frac{2C_\sigma^5 R^4 B^2 \log(d) + 8C_\sigma^3 R^2 \log(1/\delta)}{c_\sigma^3}$ and $\mu_{\mathrm{s}} = c \cdot \frac{C_\sigma}{c_\sigma^3}$.

□

Lemma 5 (GD condition for the GLM)**.** *Consider the generalized linear model setup of Section 3.2.2.*

- *When $\|\cdot\|/\|\cdot\|_\star$ are any dual norm pair, we have $\left(1, \frac{BC_\sigma}{c_\sigma}\right)$-GD:*

$$
F(w) - F(w^\star) \leq \frac{BC_\sigma}{c_\sigma} \|\nabla F(w)\| \quad \forall w \in \mathcal{W}. \tag{3.17}
$$

- *In the ℓ_2/ℓ_2 setup, we have $\left(2, \frac{C_\sigma}{4c_\sigma^3 \lambda_{\min}(\Sigma)}\right)$-GD:*

$$F(w) - F(w^\star) \leq \frac{C_\sigma}{4c_\sigma^3 \lambda_{\min}(\Sigma)} \|\nabla F(w)\|_2^2 \quad \forall w \in \mathcal{W}. \tag{3.18}$$

- *In the sparse ℓ_∞/ℓ_1 setup, where $\|w^\star\|_0 \leq s$, we have $\left(2, \frac{C_\sigma s}{c_\sigma^3 \psi_{\min}(\Sigma)}\right)$-GD:*

$$F(w) - F(w^\star) \leq \frac{C_\sigma s}{c_\sigma^3 \psi_{\min}(\Sigma)} \|\nabla F(w)\|_\infty^2 \quad \forall w \in \mathcal{W}. \tag{3.19}$$

Proof of Lemma 5.

Upper bound for excess risk. We first prove the following intermediate upper bound:

$$F(w) - F(w^\star) \leq \frac{C_\sigma}{2c_\sigma} \langle \nabla F(w), w - w^\star \rangle. \tag{3.20}$$

Letting $w \in \mathcal{W}$ be fixed, we have

$$\langle \nabla F(w), w - w^\star \rangle = 2\,\mathbb{E}_{(x,y)}[(\sigma(\langle w, x\rangle - y)\sigma'(\langle w, x\rangle)\langle w - w^\star, x\rangle].$$

Using the well-specified assumption:

$$= 2\,\mathbb{E}_x[(\sigma(\langle w, x\rangle - \sigma(\langle w^\star, x\rangle))\sigma'(\langle w, x\rangle)\langle w - w^\star, x\rangle].$$

We now consider the term inside the expectation. Since σ is increasing we have

$$\sigma(\langle w, x\rangle - \sigma(\langle w^\star, x\rangle))\sigma'(\langle w, x\rangle)\langle w - w^\star, x\rangle = |\sigma(\langle w, x\rangle - \sigma(\langle w^\star, x\rangle))| \cdot |\langle w - w^\star, x\rangle| \cdot \sigma'(\langle w, x\rangle)$$

point-wise. We apply two lower bounds. First, $\sigma'(\langle w, x\rangle) > c_\sigma$ by assumption. Second, Lipschitzness of σ implies

$$|\sigma(\langle w, x\rangle) - \sigma(\langle w^\star, x\rangle)| \leq C_\sigma |\langle w - w^\star, x\rangle|.$$

Combining these inequalities, we also obtain the following inequality in expectation over x:

$$\mathbb{E}_x(\sigma(\langle w, x\rangle) - \sigma(\langle w^\star, x\rangle))^2 \leq \frac{C_\sigma}{2c_\sigma} \langle \nabla F(w), w - w^\star \rangle.$$

Lastly, since the model is well-specified we have

$$F(w) - F(w^\star) = \mathbb{E}_x(\sigma(\langle w, x\rangle) - \sigma(\langle w^\star, x\rangle))^2,$$

by a standard argument:

$$\begin{aligned} F(w) - F(w^\star) &= \mathbb{E}_{x,y}\big[\sigma^2(\langle w, x\rangle) + y^2 - 2\sigma(\langle w, x\rangle)y - \sigma^2(\langle w^\star, x\rangle) - y^2 + 2\sigma(\langle w^\star, x\rangle)y\big] \\ &= \mathbb{E}_x\big[\sigma^2(\langle w, x\rangle) - 2\sigma(\langle w, x\rangle)\sigma(\langle w^\star, x\rangle) + \sigma^2(\langle w^\star, x\rangle)\big] \\ &= \mathbb{E}_x(\sigma(\langle w, x\rangle) - \sigma(\langle w^\star, x\rangle))^2. \end{aligned}$$

Proving the GD conditions. With the inequality (3.20) established the various GD inequalities follow in quick succession.

- $\left(1, \frac{BC_\sigma}{c_\sigma}\right)$-GD:

  To prove this inequality, simply user Hölder's inequality to obtain the upper bound,

  $$\langle \nabla F(w), w - w^\star\rangle \le 2B\|\nabla F(w)\|.$$

- $\left(2, \frac{C_\sigma}{4c_\sigma^3 \lambda_{\min}\left(\mathbb{E}\left[xx^\top\right]\right)}\right)$-GD:

  Resuming from (3.20) we have

  $$F(w) - F(w^\star) \le \frac{C_\sigma}{2c_\sigma}\langle \nabla F(w), w - w^\star\rangle.$$

  Let $P_{\mathcal{X}}$ denote the orthogonal projection onto $\mathrm{span}(\mathbb{E}\left[xx^\top\right])$. Note that $\nabla \ell(w\,; x, y)$ is parallel to x, we can thus introduce the projection matrix $P_{\mathcal{X}}$ while preserving the inner product

  $$= \frac{C_\sigma}{2c_\sigma}\langle P_{\mathcal{X}}\nabla F(w), P_{\mathcal{X}}(w - w^\star)\rangle$$

Applying Cauchy-Schwarz:

$$\leq \frac{C_\sigma}{2c_\sigma} \|\nabla F(w)\|_2 \cdot \|P_{\mathcal{X}}(w - w^\star)\|_2. \tag{3.21}$$

What remains is to relate the gradient norm to the term $\|P_{\mathcal{X}}(w - w^\star)\|_2$. We proceed with another lower bound argument similar to the one used to establish (3.20),

$$\langle \nabla F(w), w - w^\star \rangle = 2\,\mathbb{E}_{(x,y)}[(\sigma(\langle w, x\rangle - y)\sigma'(\langle w, x\rangle)\langle w - w^\star, x\rangle].$$

Using the well-specified assumption once more:

$$= 2\,\mathbb{E}_x[(\sigma(\langle w, x\rangle - \sigma(\langle w^\star, x\rangle))\sigma'(\langle w, x\rangle)\langle w - w^\star, x\rangle].$$

Monotonicity of σ, implies the argument to the expectation is non-negative pointwise, so we have the lower bound,

$$\geq 2c_\sigma\,\mathbb{E}_x[(\sigma(\langle w, x\rangle - \sigma(\langle w^\star, x\rangle))\langle w - w^\star, x\rangle].$$

Consider a particular draw of x and assume $\langle w, x\rangle \geq \langle w^\star, x\rangle$ without loss of generality. Using the mean value theorem, there is some $s \in [\langle w^\star, x\rangle, \langle w, x\rangle]$ such that

$$(\sigma(\langle w, x\rangle - \sigma(\langle w^\star, x\rangle))\langle w - w^\star, x\rangle = \langle w - w^\star, x\rangle^2 \sigma'(s) \geq \; = \langle w - w^\star, x\rangle^2 c_\sigma.$$

Grouping terms, we have shown

$$\begin{aligned}\langle P_{\mathcal{X}}\nabla F(w), P_{\mathcal{X}}(w - w^\star)\rangle = \langle \nabla F(w), w - w^\star\rangle &\geq 2c_\sigma^2\,\mathbb{E}\langle w - w^\star, x\rangle^2 \\ &= 2c_\sigma^2 \big\langle w - w^\star, \mathbb{E}\big[xx^\top\big](w - w^\star)\big\rangle \\ &\geq 2c_\sigma^2 \lambda_{\min}\big(\mathbb{E}\big[xx^\top\big]\big)\|P_{\mathcal{X}}(w - w^\star)\|_2^2.\end{aligned} \tag{3.22}$$

In other words, by rearranging and applying Cauchy-Schwarz we have

$$\|P_{\mathcal{X}}(w - w^\star)\|_2 \leq \frac{1}{2c_\sigma^2 \lambda_{\min}(\mathbb{E}[xx^\top])} \cdot \|\nabla \mathcal{L}_{\mathcal{D}}(w)\|_2.$$

Combining this inequality with (3.21), we have

$$F(w) - F(w^\star) \leq \frac{C_\sigma}{4c_\sigma^3 \lambda_{\min}(\mathbb{E}[xx^\top])} \cdot \|\nabla \mathcal{L}_{\mathcal{D}}(w)\|_2^2.$$

- $\left(2, \frac{C_\sigma s}{c_\sigma^3 \psi_{\min}\left(\mathbb{E}\left[xx^\top\right]\right)}\right)$-GD:

Using the inequality (3.22) from the preceeding GD proof, we have

$$\langle \nabla F(w), w - w^\star \rangle \geq 2c_\sigma^2 \left\langle w - w^\star, \mathbb{E}\left[xx^\top\right](w - w^\star)\right\rangle.$$

By the assumption that $\|w\|_1 \leq \|w^\star\|_1$, we apply Lemma 6 to conclude that 1) $w - w^\star \in \mathcal{C}(S(w^\star), 1)$ and 2) $\|w - w^\star\|_1 \leq 2\sqrt{s}\|w - w^\star\|_2$. The first fact implies that

$$\left\langle w - w^\star, \mathbb{E}\left[xx^\top\right](w - w^\star)\right\rangle \geq \psi_{\min}(\mathbb{E}\left[xx^\top\right])\|w - w^\star\|_2^2.$$

Rearranging, we have

$$\begin{aligned}
\|w - w^\star\|_2 &\leq \frac{1}{2c_\sigma^2 \psi_{\min}(\mathbb{E}[xx^\top])} \frac{\langle \nabla F(w), w - w^\star \rangle}{\|w - w^\star\|_2} \\
&\leq \frac{1}{2c_\sigma^2 \psi_{\min}(\mathbb{E}[xx^\top])} \frac{\|\nabla F(w)\|_\infty \|w - w^\star\|_1}{\|w - w^\star\|_2} \\
&\leq \frac{\sqrt{s}}{c_\sigma^2 \psi_{\min}(\mathbb{E}[xx^\top])} \|\nabla F(w)\|_\infty.
\end{aligned}$$

On the other hand, from (3.20) we have

$$\begin{aligned}
F(w) - F(w^\star) &\leq \frac{C_\sigma}{2c_\sigma} \langle \nabla F(w), w - w^\star \rangle \\
&\leq \frac{C_\sigma}{2c_\sigma} \|\nabla F(w)\|_\infty \|w - w^\star\|_1 \\
&\leq \frac{C_\sigma \sqrt{s}}{c_\sigma} \|\nabla F(w)\|_\infty \|w - w^\star\|_2.
\end{aligned}$$

Combining this with the preceding inequality yields the result.

□

The following utility lemma is a standard result in high-dimensional statistics (e.g. Tibshirani et al. (2015)).

Lemma 6. *Let $w, w^\star \in \mathbb{R}^d$. If $\|w\|_1 \leq \|w^\star\|_1$ then $w - w^\star =: \nu \in \mathcal{C}(S(w^\star), 1)$. Furthermore, $\|\nu\|_1 \leq 2\sqrt{|S(w^\star)|}\|\nu\|_2$.*

Proof of Lemma 6. Let $S := S(w^\star)$. Then the constraint that $\|w\|_1 \leq \|w^\star\|$ implies

$$\|w^\star\|_1 \geq \|w\|_1 = \|w^\star + \nu\|_1 = \|w^\star + \nu_S\|_1 + \|\nu_{S^C}\|_1 \geq \|w^\star\|_1 - \|\nu_S\|_1 + \|\nu_{S^C}\|_1.$$

Rearranging, this implies $\|\nu_{S^C}\|_1 \leq \|\nu_S\|_1$, so the first result is established.

For the second result, $\nu \in \mathcal{C}(S, 1)$ implies $\|\nu\|_1 = \|\nu_S\|_1 + \|\nu_{S^C}\|_1 \leq 2\|\nu_S\|_1 \leq 2\sqrt{|S|}\|\nu_S\|_2 \leq 2\sqrt{|S|}\|\nu\|_2$. □

Lemma 7. *Let the norm $\|\cdot\|$ satisfy the smoothness property of Theorem 7 with constant β. Then the empirical loss gradient for the generalized linear model setting enjoys the normed Rademacher complexity bound,*

$$\mathbb{E}_\epsilon \sup_{w \in \mathcal{W}} \left\| \sum_{t=1}^n \epsilon_t \nabla \ell(w\,; x_t, y_t) \right\| \leq O\Big(BR^2 C_\sigma^2 \sqrt{\beta n}\Big). \tag{3.23}$$

Proof of Lemma 7. Let $G_t(s) = (\sigma(s) - y_t)^2$ and $F_t(w) = \langle w, x_t \rangle$, so that $\ell(w\,; x_t, y_t) = G_t(F_t(w))$.

Observe that $G_t'(s) = 2(\sigma(s) - y_t)\sigma'(s)$ and $\nabla F_t(w) = x_t$, so our assumptions imply that that $|G_t'(s)| \leq 2C_\sigma$ and $\|\nabla F_t(w)\| \leq R$. We can thus apply Theorem 6 to conclude

$$\mathbb{E}_\epsilon \sup_{w \in \mathcal{W}} \left\| \sum_{t=1}^n \epsilon_t \nabla \ell(w\,; x_t, y_t) \right\| \leq 2R\,\mathbb{E}_\epsilon \sup_{w \in \mathcal{W}} \sum_{t=1}^n \epsilon_t G_t'(\langle w, x_t \rangle) + 4C_\sigma\,\mathbb{E}_\epsilon \left\| \sum_{t=1}^n \epsilon_t x_t \right\|.$$

For the first term on the left-hand side, observe that for any s, $|G_t''(s)| \le 2|\sigma''(s)| + 2|\sigma'(s)|^2 \le 4C_\sigma^2$, so G_t' is $4C_\sigma^2$-Lipschitz. The classical scalar Lipschitz contraction inequality for Rademacher complexity (Lemma 1) therefore implies

$$\mathbb{E}_\epsilon \sup_{w\in\mathcal{W}} \sum_{t=1}^n \epsilon_t G_t'(\langle w, x_t\rangle) \le 4C_\sigma^2\, \mathbb{E}_\epsilon \sup_{w\in\mathcal{W}} \sum_{t=1}^n \epsilon_t \langle w, x_t\rangle = 4C_\sigma^2 B\, \mathbb{E}_\epsilon \left\| \sum_{t=1}^n \epsilon_t x_t \right\|.$$

Finally, by our smoothness assumption on the norm, Theorem 7 implies

$$\mathbb{E}_\epsilon \left\| \sum_{t=1}^n \epsilon_t x_t \right\| \le \sqrt{2\beta R^2 n}.$$

□

Robust Regression

Proof of Theorem 9. This proof follows the same template as Theorem 8. We use Proposition 1 and Proposition **??** to conclude that whenever (α, μ)-PL holds, with probability at least $1-\delta$ over the examples $\{(x_t, y_t)\}_{t=1}^n$, any learning algorithm $\widehat{w}^{\mathrm{alg}}$ satisfies

$$F(\widehat{w}^{\mathrm{alg}}) - F^\star \le c\cdot\mu\left(\left\|\nabla \widehat{F}_n(\widehat{w}^{\mathrm{alg}})\right\|^\alpha + \left(\frac{\mathfrak{R}_{\|\cdot\|}(\nabla\ell\circ\mathcal{W}\,; x_{1:n}, y_{1:n})}{n} + C_\rho R\sqrt{\frac{\log(1/\delta)}{n}} \right)^\alpha \right), \tag{3.24}$$

where $c > 0$ is an absolute constant and we have used that $\|\nabla\ell(w\,; x_t, y_t)\| \le C_\rho R$ with probability 1.

Smooth high-dimensional setup For the general smooth norm pair setup in (3.24), Lemma 8 and Lemma 9 imply

$$F(\widehat{w}^{\mathrm{alg}}) - F^\star \le c\cdot \frac{BC_\rho}{c_\rho}\left(\left\|\nabla \widehat{F}_n(\widehat{w}^{\mathrm{alg}})\right\| + \left(BR^2 C_\rho \sqrt{\frac{\beta}{n}} + C_\rho R\sqrt{\frac{\log(1/\delta)}{n}} \right) \right)$$

$$= \mu_{\mathrm{h}} \cdot \left\| \nabla \widehat{F}_n(\widehat{w}^{\mathrm{alg}}) \right\| + \frac{C_{\mathrm{h}}}{\sqrt{n}}.$$

Where we recall $C_{\mathrm{h}} = c \cdot \frac{B^2 R^2 C_\rho^2 \sqrt{\beta} + C_\rho^2 B R \sqrt{\log(1/\delta)}}{c_\rho}$ and $\mu_{\mathrm{h}} = c \cdot \frac{B C_\rho}{c_\rho}$.

Low-dimensional ℓ_2/ℓ_2 setup For the low-dimension ℓ_2/ℓ_2 pair setup in (3.24), Lemma 8 and Lemma 9 imply

$$\begin{aligned} F(\widehat{w}^{\mathrm{alg}}) - F^\star &\leq c \cdot \frac{C_\rho}{2 c_\rho^2 \lambda_{\min}(\Sigma)} \left(\left\| \nabla \widehat{F}_n(\widehat{w}^{\mathrm{alg}}) \right\|^2 + \left(B R^2 C_\rho \sqrt{\frac{1}{n}} + C_\rho R \sqrt{\frac{\log(1/\delta)}{n}} \right)^2 \right) \\ &= \frac{\mu_{\mathrm{l}}}{\lambda_{\min}(\Sigma)} \cdot \left\| \nabla \widehat{F}_n(\widehat{w}^{\mathrm{alg}}) \right\|^2 + \frac{C_{\mathrm{l}}}{n \cdot \lambda_{\min}(\Sigma)}, \end{aligned}$$

where we have used that the ℓ_2 norm is 1-smooth in Lemma 7. Recall that $C_{\mathrm{l}} = c \cdot \frac{C_\rho^3 R^4 B^2 + C_\rho^3 R^2 \log(1/\delta)}{c_\rho^2}$ and $\mu_{\mathrm{l}} = c \cdot \frac{C_\rho}{2 c_\rho^2}$.

Sparse ℓ_∞/ℓ_1 setup For the sparse ℓ_∞/ℓ_1 pair setup in (3.24), Lemma 8 and Lemma 9 imply

$$\begin{aligned} F(\widehat{w}^{\mathrm{alg}}) - F^\star &\leq c \cdot \frac{2 C_\rho s}{c_\rho^2 \psi_{\min}(\Sigma)} \left(\left\| \nabla \widehat{F}_n(\widehat{w}^{\mathrm{alg}}) \right\|^2 + \left(B R^2 C_\rho \sqrt{\frac{\log d}{n}} + C_\rho R \sqrt{\frac{\log(1/\delta)}{n}} \right)^2 \right) \\ &= \frac{\mu_{\mathrm{s}} \cdot s}{\psi_{\min}(\Sigma)} \cdot \left\| \nabla \widehat{F}_n(\widehat{w}^{\mathrm{alg}}) \right\|^2 + \frac{s}{n} \cdot \frac{C_{\mathrm{s}}}{\psi_{\min}(\Sigma)}, \end{aligned}$$

where we have used that the ℓ_∞ norm has the smoothness property with $\beta = O(\log(d))$ in Lemma 7. Recall that $C_{\mathrm{s}} = c \cdot \frac{4 C_\rho^3 R^4 B^2 \log(d) + 4 C_\rho^3 R^2 \log(1/\delta)}{c_\rho^2}$ and $\mu_{\mathrm{s}} = c \cdot \frac{2 C_\rho}{c_\rho^2}$.

□

Lemma 8 (GD condition for robust regression)**.** *Consider the robust regression setup of Section* **??**.

- *When $\|\cdot\|/\|\cdot\|_\star$ are any dual norm pair, we have $\left(1, \frac{BC_\rho}{c_\rho}\right)$-GD:*

$$F(w) - F(w^\star) \leq \frac{BC_\rho}{c_\rho}\|\nabla F(w)\| \quad \forall w \in \mathcal{W}. \tag{3.25}$$

- *In the ℓ_2/ℓ_2 setup, we have $\left(2, \frac{C_\rho}{2c_\rho^2\lambda_{\min}(\Sigma)}\right)$-GD:*

$$F(w) - F(w^\star) \leq \frac{C_\rho}{2c_\rho^2\lambda_{\min}(\Sigma)}\|\nabla F(w)\|_2^2 \quad \forall w \in \mathcal{W}. \tag{3.26}$$

- *In the sparse ℓ_∞/ℓ_1 setup, where $\|w^\star\|_0 \leq s$, we have $\left(2, \frac{2C_\rho s}{c_\rho^2\psi_{\min}(\Sigma)}\right)$-GD:*

$$F(w) - F(w^\star) \leq \frac{2C_\rho s}{c_\rho^2\psi_{\min}(\Sigma)}\|\nabla F(w)\|_\infty^2 \quad \forall w \in \mathcal{W}. \tag{3.27}$$

Proof of Lemma 8.

Excess risk upper bound. To begin, smoothness of ρ implies that for any $s, s^\star \in \mathcal{S}$ we have

$$\rho(s) - \rho(s^\star) \leq \ \leq \rho'(s^\star)(s - s^\star) + \frac{C_\rho}{2}(s - s^\star)^2.$$

Since this holds point-wise, we use it to derive the following in-expectation bound

$$\begin{aligned} F(w) - F(w^\star) &\leq \mathbb{E}_{x,y}[\rho(\langle w^\star, x\rangle - y)\langle w - w^\star, x\rangle] + \frac{C_\rho}{2}\,\mathbb{E}\langle w - w^\star, x\rangle^2 \\ &= \langle \nabla F(w^\star), w - w^\star\rangle + \frac{C_\rho}{2}\,\mathbb{E}\langle w - w^\star, x\rangle^2. \end{aligned}$$

Note however that

$$\nabla F(w^\star) = \mathbb{E}_{x,\zeta}[\rho'(-\zeta)x] = 0,$$

since ζ is conditionally symmetric and ρ' is odd. We therefore have

$$F(w) - F(w^\star) \leq \frac{C_\rho}{2}\,\mathbb{E}\langle w - w^\star, x\rangle^2.$$

On the other hand, using the form of the gradient we have

$$\langle F(w), w - w^\star\rangle = \mathbb{E}_x[\mathbb{E}_\zeta\, \rho'(\langle w - w^\star, x\rangle - \zeta)\langle w - w^\star, x\rangle]$$

$$= \mathbb{E}_x[h(\langle w - w^\star, x\rangle)\langle w - w^\star, x\rangle].$$

To lower bound the term inside the expectation, consider a particular draw of x and assume $\langle w - w^\star, x\rangle \geq 0$; this is admissible because h, like ρ', is odd. Then we have

$$h(\langle w - w^\star, x\rangle)\langle w - w^\star, x\rangle = \frac{h(\langle w - w^\star, x\rangle)}{\langle w - w^\star, x\rangle}\langle w - w^\star, x\rangle^2 \geq c_\rho \langle w - w^\star, x\rangle^2,$$

where the last line follows because $h(0) = 0$ and $h'(0) > c_\rho$. Since this holds pointwise, we simply take the expectation to show that

$$\langle \nabla F(w), w - w^\star\rangle \geq c_\rho \, \mathbb{E}_x \langle w - w^\star, x\rangle^2, \tag{3.28}$$

and consequently the excess risk is bounded by

$$F(w) - F(w^\star) \leq \frac{C_\rho}{2c_\rho}\langle \nabla F(w), w - w^\star\rangle. \tag{3.29}$$

Proving the GD conditions. We now use (3.29) to establish the GD condition variants.

- $\left(1, \frac{BC_\rho}{c_\rho}\right)$-GD:

  Use Hölder's inequality to obtain the upper bound,

  $$\langle \nabla F(w), w - w^\star\rangle \leq 2B\|\nabla F(w)\|.$$

- $\left(2, \frac{C_\rho}{2c_\rho^2 \lambda_{\min}(\Sigma)}\right)$-GD:

  Begin with

  $$F(w) - F(w^\star) \leq \frac{C_\rho}{2c_\rho}\langle \nabla F(w), w - w^\star\rangle.$$

Using the same reasoning as in Lemma 5, this is upper bounded by

$$\leq \frac{C_\rho}{2c_\rho}\|\nabla F(w)\|_2 \cdot \|P_{\mathcal{X}}(w - w^\star)\|_2, \tag{3.30}$$

where $P_{\mathcal{X}}$ denotes the orthogonal projection onto span(Σ).

Recalling (3.28), it also holds that

$$\begin{aligned}
\langle P_{\mathcal{X}}\nabla F(w), P_{\mathcal{X}}(w - w^\star)\rangle = \langle \nabla F(w), w - w^\star\rangle &\geq c_\rho\, \mathbb{E}_x\langle w - w^\star, x\rangle^2 \\
&= c_\rho\big\langle w - w^\star, \mathbb{E}_x\big[xx^T\big](w - w^\star)\big\rangle \\
&= c_\rho\langle w - w^\star, \Sigma(w - w^\star)\rangle \\
&\geq c_\rho\lambda_{\min}(\Sigma)\|P_{\mathcal{X}}(w - w^\star)\|_2^2.
\end{aligned} \tag{3.31}$$

Rearranging and applying Cauchy-Schwarz, we have

$$\|P_{\mathcal{X}}(w - w^\star)\|_2 \leq \frac{1}{c_\rho\lambda_{\min}(\Sigma)} \cdot \|\nabla\mathcal{L}_{\mathcal{D}}(w)\|_2.$$

Combining this inequality with (3.30), we have

$$F(w) - F(w^\star) \leq \frac{C_\rho}{2c_\rho^2\lambda_{\min}(\Sigma)} \cdot \|\nabla\mathcal{L}_{\mathcal{D}}(w)\|_2^2.$$

- $\left(2, \frac{2C_\rho s}{c_\rho^2\psi_{\min}(\Sigma)}\right)$-GD:

Using the inequality (3.31) from the ℓ_2/ℓ_2 GD condition proof above

$$\langle \nabla F(w), w - w^\star\rangle \geq c_\rho\langle w - w^\star, \Sigma(w - w^\star)\rangle.$$

By the assumption that $\|w\|_1 \leq \|w^\star\|_1$, we apply Lemma 6 to conclude that 1) $w - w^\star \in \mathcal{C}(S(w^\star), 1)$ and 2) $\|w - w^\star\|_1 \leq 2\sqrt{s}\|w - w^\star\|_2$, and so

$$\langle w - w^\star, \Sigma(w - w^\star)\rangle \geq \psi_{\min}(\Sigma)\|w - w^\star\|_2^2.$$

Rearranging, and applying the $\|w - w^\star\|_1 \le 2\sqrt{s}\|w - w^\star\|_2$ inequality:

$$\begin{aligned}
\|w - w^\star\|_2 &\le \frac{1}{c_\rho \psi_{\min}(\Sigma)} \frac{\langle \nabla F(w), w - w^\star \rangle}{\|w - w^\star\|_2} \\
&\le \frac{1}{c_\rho \psi_{\min}(\Sigma)} \frac{\|\nabla F(w)\|_\infty \|w - w^\star\|_1}{\|w - w^\star\|_2} \\
&\le \frac{2\sqrt{s}}{c_\rho \psi_{\min}(\Sigma)} \|\nabla F(w)\|_\infty .
\end{aligned}$$

Finally, from (3.29) we have

$$\begin{aligned}
F(w) - F(w^\star) &\le \frac{C_\rho}{2c_\rho} \langle \nabla F(w), w - w^\star \rangle \\
&\le \frac{C_\rho}{2c_\rho} \|\nabla F(w)\|_\infty \|w - w^\star\|_1 \\
&\le \frac{C_\rho \sqrt{s}}{c_\rho} \|\nabla F(w)\|_\infty \|w - w^\star\|_2 .
\end{aligned}$$

Combining the two inequalities gives the final result.

□

Lemma 9. *Let the norm $\|\cdot\|$ satisfy the smoothness property (see Theorem 7) with constant β. Then the gradient for robust regression satisfies the following normed Rademacher complexity bound:*

$$\mathbb{E}_\epsilon \sup_{w \in \mathcal{W}} \left\| \sum_{t=1}^n \epsilon_t \nabla \ell(w\,; x_t, y_t) \right\| \le O\Big(B R^2 C_\rho \sqrt{\beta n} \Big). \tag{3.32}$$

Proof of Lemma 9. Let $G_t(s) = \rho(s - y_t)$ and $F_t(w) = \langle w, x_t \rangle$, so that $\ell(w\,; x_t, y_t) = G_t(F_t(w))$.

Then $G_t'(s) = \rho'(s - y_t)$ and $\nabla F_t(w) = x_t$, so our assumptions imply that that $|G_t'(s)| \le C_\rho$ and $\|\nabla F_t(w)\| \le R$. We apply Theorem 6 to conclude

$$\mathbb{E}_\epsilon \sup_{w \in \mathcal{W}} \left\| \sum_{t=1}^n \epsilon_t \nabla \ell(w\,; x_t, y_t) \right\| \le 2R\, \mathbb{E}_\epsilon \sup_{w \in \mathcal{W}} \sum_{t=1}^n \epsilon_t G_t'(\langle w, x_t \rangle) + 2C_\rho\, \mathbb{E}_\epsilon \left\| \sum_{t=1}^n \epsilon_t x_t \right\|.$$

For the first term on the left-hand side, we have that for any s, $|G_t''(s)| = 2|\rho''(s - y_t)| \leq 2C_\rho$, so G_t' is $2C_\sigma$-Lipschitz. Then the by scalar contraction for Rademacher complexity (Lemma 1),

$$\mathbb{E}_\epsilon \sup_{w \in \mathcal{W}} \sum_{t=1}^{n} \epsilon_t G_t'(\langle w, x_t \rangle) \leq 2C_\rho \, \mathbb{E}_\epsilon \sup_{w \in \mathcal{W}} \sum_{t=1}^{n} \epsilon_t \langle w, x_t \rangle = 2C_\rho B \, \mathbb{E}_\epsilon \left\| \sum_{t=1}^{n} \epsilon_t x_t \right\|.$$

Finally, the smoothness assumption on the norm (via Theorem 7) implies

$$\mathbb{E}_\epsilon \left\| \sum_{t=1}^{n} \epsilon_t x_t \right\| \leq \sqrt{2\beta R^2 n}.$$

□

Proof of Proposition 2. Observe that Assumption 3 and Assumption 4 respectively imply that $\|\nabla F(w^\star)\| = 0$ for the GLM and RR settings. Begin by invoking Theorem 8. It is immediate that any algorithm that guarantees $\mathbb{E}\left\|\nabla \widehat{F}_n(\widehat{w}^{\mathrm{alg}})\right\| \leq 1/\sqrt{n}$ will obtain the claimed sample complexity bound (the high-probability statement Theorem 8 immediately yields an in-expectation statement due to boundedness), so all we must do is verify that such a point exists. Proposition **??** along with Lemma 7 and Lemma 9 respectively indeed imply that $\left\|\nabla \widehat{F}_n(w^\star)\right\|_2 \leq C/\sqrt{n}$ for both settings.

For completeness, we show below that both models indeed have Lipschitz gradients, and so standard smooth optimizers can be applied to the empirical loss.

Generalized Linear Model. Observe that for any (x, y) pair we have

$$\|\nabla \ell(w\,; x, y) - \nabla \ell(w'\,; x, y)\|_2 = 2\|x\|_2 |(\sigma(\langle w, x \rangle) - y)\sigma'(\langle w, x \rangle) - (\sigma(\langle w', x \rangle) - y)\sigma'(\langle w', x \rangle)|.$$

Letting $f(s) = (\sigma(s) - y)\sigma'(s)$, we see that the assumption on the loss guarantees $|f'(s)| \leq 3C_\sigma^2$, so we have

$$\|\nabla \ell(w\,; x, y) - \nabla \ell(w'\,; x, y)\|_2 \leq 6C_\sigma^2 R |\langle w - w', x \rangle| \leq \; \leq 6C_\sigma^2 R^2 \|w - w'\|_2,$$

so smoothness is established.

Robust Regression. Following a similar calculation to the GLM case, we have

$$\begin{aligned}\|\nabla \ell(w\,; x, y) - \nabla \ell(w'\,; x, y)\|_2 &= \|x\|_2 |\rho'(\langle w, x\rangle - y) - \rho'(\langle w', x\rangle - y)| \\ &\leq C_\rho \|x\|_2 |\langle w - w^\star, x\rangle| \\ &\leq C_\rho \|x\|_2^2 \|w - w^\star\|_2 \\ &\leq C_\rho R^2 \|w - w^\star\|_2.\end{aligned}$$

Now let $f(s) = (\sigma(s) - y)\sigma'(s)$, and observe that $|f'(s)| \leq 3C_\sigma^2$, so we have

$$\|\nabla \ell(w\,; x, y) - \nabla \ell(w'\,; x, y)\|_2 \leq 6C_\sigma^2 R |\langle w - w', x\rangle| \leq \ \leq 6C_\sigma^2 R^2 \|w - w'\|_2.$$

□

3.4.2 Proof for Section 3.3

Here we show that any algorithm that finds a stationary point of the regularized empirical loss generically succeeds obtains optimal sample complexity in the high-dimensional/norm-based setting. We focus on the generalized linear model in the Euclidean setting.

Let $r(w) = \frac{\lambda}{2}\|w\|_2^2$. Define $F^\lambda(w) = F(w) + r(w)$ and $\widehat{F}_n^\lambda(w) = \widehat{F}_n(w) + r(w)$. We consider any algorithm that returns a point $\widehat{w}$ with $\nabla \widehat{F}_n^\lambda(\widehat{w}) = 0$, i.e. any stationary point of the regularized empirical risk.

Theorem 11. *Consider the generalized linear model setting. Let $\widehat{w}$ be any point with $\nabla \widehat{F}_n^\lambda(\widehat{w}) = 0$. Suppose that $\|w^\star\|_2 = 1$ and $C_\sigma, R > 1$. Then there is some absolute constant $c > 0$ such that for any fixed $\delta > 0$, if the regularization parameter*

λ satisfies

$$\lambda > c \cdot \sqrt{\frac{R^4 C_\sigma^6}{c_\sigma^2} \cdot \frac{\log(\log(C_\sigma R n)/\delta)}{n}},$$

then with probability at least $1-\delta$,

$$F(\widehat{w}) - F(w^\star) \leq O\left(\frac{R^2 C_\sigma^4}{c_\sigma^2} \cdot \sqrt{\frac{\log(\log(C_\sigma R n)/\delta)}{n}}\right).$$

Theorem 11 easily extends to the robust regression setting by replacing invocations of Lemma 7 with Lemma 9 and use of (3.20) with (3.29).

Proof of Theorem 11. Recall that $w^\star$ minimizes the *unregularized* population risk, and that $\|w^\star\|_2 = 1$. The technical challenge is to apply Lemma 7 even though we lack a good a-priori upper bound on the norm of $\widehat{w}$. We proceed by splitting the analysis into two cases. The idea is that if $\|\widehat{w}\|_2 \leq \|w^\star\|_2$ we can apply Lemma 7 directly with no additional difficulty. On other hand, when $\|\widehat{w}\|_2 \geq \|w^\star\|_2$ the regularized population risk satisfies the $(2, O(1/\lambda))$-GD inequality, which is enough to show that excess risk is small even though $\|\widehat{w}\|_2$ could be larger than $\|w^\star\|_2$.

Case 1: $\|\widehat{w}\|_2 \geq \|w^\star\|_2$.

Let $\widetilde{\mathcal{W}} = \left\{w \in \mathbb{R}^d \mid \|w\|_2 \geq \|w^\star\|_2\right\}$, so that $\widehat{w} \in \widetilde{\mathcal{W}}$. Observe that since $r(w)$ is λ-strongly convex it satisfies $r(w) - r(w^\star) \leq \langle \nabla r(w), w - w^\star \rangle - \frac{\lambda}{2}\|w - w^\star\|_2^2$ for all w. Moreover, if $w \in \widetilde{\mathcal{W}}$, we have

$$\langle \nabla r(w), w - w^\star \rangle \geq r(w) - r(w^\star) + \frac{\lambda}{2}\|w - w^\star\|_2^2 \geq 0.$$

Using (3.20) and the definition of $w^\star$, along with the strong convexity of r, we get

$$F^\lambda(w) - F^\lambda(w^\star) \leq \frac{C_\sigma}{2c_\sigma}\langle \nabla F(w), w - w^\star \rangle + \langle \nabla r(w), w - w^\star \rangle - \frac{\lambda}{2}\|w - w^\star\|_2^2.$$

Since $\langle \nabla F(w), w - w^\star \rangle \geq 0$, this is upper bounded by

$$F^\lambda(w) - F^\lambda(w^\star) \leq \frac{C_\sigma}{c_\sigma} \langle \nabla F(w), w - w^\star \rangle + \langle \nabla r(w), w - w^\star \rangle - \frac{\lambda}{2} \|w - w^\star\|_2^2.$$

Using the non-negativity of $\langle \nabla r(w), w - w^\star \rangle$ over $\widetilde{\mathcal{W}}$, and that $C_\sigma / c_\sigma > 1$, this implies

$$F^\lambda(w) - F^\lambda(w^\star) \leq \frac{C_\sigma}{c_\sigma} \big\langle \nabla F^\lambda(w), w - w^\star \big\rangle - \frac{\lambda}{2} \|w - w^\star\|_2^2 \quad \forall w \in \widetilde{\mathcal{W}}.$$

Applying Cauchy-Schwarz:

$$\leq \frac{C_\sigma}{c_\sigma} \big\|\nabla F^\lambda(w)\big\|_2 \|w - w^\star\|_2 - \frac{\lambda}{2} \|w - w^\star\|_2^2 \quad \forall w \in \widetilde{\mathcal{W}}.$$

Using the AM-GM inequality:

$$\leq \frac{C_\sigma^2}{c_\sigma^2 \lambda} \big\|\nabla F^\lambda(w)\big\|_2^2 \quad \forall w \in \widetilde{\mathcal{W}}.$$

Using that $\widehat{w} \in \widetilde{\mathcal{W}}$, and that $\nabla \widehat{F}_n^\lambda(\widehat{w}) = 0$, we have

$$F^\lambda(\widehat{w}) - F^\lambda(w^\star) \leq \frac{C_\sigma^2}{c_\sigma^2 \lambda} \Big\|\nabla F^\lambda(\widehat{w}) - \nabla \widehat{F}_n^\lambda(\widehat{w})\Big\|_2^2. \tag{3.33}$$

Observe that since $\widehat{w}$ is a stationary point of the empirical risk, $\nabla \widehat{F}_n(\widehat{w}) = -\lambda \widehat{w}$, and so $\|\widehat{w}\|_2 \leq \frac{1}{\lambda} \Big\|\nabla \widehat{F}_n(\widehat{w})\Big\|_2 \leq \frac{2C_\sigma R}{\lambda}$ with probability 1. Thus, if we apply Lemma 10 with $B_{\max} = \frac{2C_\sigma R}{\lambda}$, we get that with probability at least $1 - \delta$,

$$\Big\|\nabla F^\lambda(\widehat{w}) - \nabla \widehat{F}_n^\lambda(\widehat{w})\Big\|_2 \leq O\left(\|\widehat{w}\|_2 R^2 C_\sigma^2 \sqrt{\frac{1}{n}} + C_\sigma R \sqrt{\frac{\log(\log(C_\sigma R/\lambda)/\delta)}{n}} \right),$$

where we have used additionally that the regularization term does not depend on data. Combining this bound with (3.33), and using that $\widehat{w} \in \widetilde{\mathcal{W}}$ and the elementary inequality $(a+b)^2 \leq 2(a^2 + b^2)$, we see that there exist constants $c, c' > 0$ such that

$$F^\lambda(\widehat{w}) - F^\lambda(w^\star) \leq c \cdot \|\widehat{w}\|_2^2 \cdot \frac{R^4 C_\sigma^6}{\lambda c_\sigma^2} \cdot \frac{1}{n} + c' \cdot \frac{R^2 C_\sigma^4}{\lambda c_\sigma^2} \cdot \frac{\log(\log(C_\sigma R/\lambda)/\delta)}{n}.$$

Expanding the definition of the regularized excess risk, this is equivalent to

$$F(\widehat{w}) - F(w^\star) \leq \lambda + \|\widehat{w}\|_2^2 \cdot \left(c \cdot \frac{R^4 C_\sigma^6}{\lambda c_\sigma^2} \cdot \frac{1}{n} - \lambda \right) + c' \cdot \frac{R^2 C_\sigma^4}{\lambda c_\sigma^2} \cdot \frac{\log(\log(C_\sigma R/\lambda)/\delta)}{n}.$$

Observe that if $\lambda > \sqrt{c \cdot \frac{R^4 C_\sigma^6}{c_\sigma^2} \cdot \frac{1}{n}}$ the middle term in this expression is at most zero. We choose

$$\lambda > \sqrt{c \cdot \frac{R^4 C_\sigma^6}{c_\sigma^2} \cdot \frac{\log(\log(C_\sigma R n)/\delta)}{n}}.$$

Substituting choice this into the expression above leads to a final bound of

$$F(\widehat{w}) - F(w^\star) \leq O\left(\frac{R^2 C_\sigma^3}{c_\sigma} \cdot \sqrt{\frac{\log(\log(C_\sigma R n)/\delta)}{n}} \right).$$

Case 2: $\|\widehat{w}\|_2 \leq \|w^\star\|_2$**.**

Recall that $\nabla \widehat{F}_n^\lambda(\widehat{w}) = 0$. This implies $\nabla \widehat{F}_n(\widehat{w}) = -\lambda \widehat{w}$, and so $\left\|\nabla \widehat{F}_n(\widehat{w})\right\|_2 \leq \lambda \|\widehat{w}\|_2 \leq \lambda$. Using (3.20) we have

$$F(\widehat{w}) - F(w^\star) \leq \frac{C_\sigma}{2c_\sigma} \langle \nabla F(\widehat{w}), \widehat{w} - w^\star \rangle \leq \frac{C_\sigma}{c_\sigma} \|\nabla F(\widehat{w})\|_2.$$

Using the bound on the empirical gradient above, we get

$$\|\nabla F(\widehat{w})\|_2 \leq \lambda + \left\|\nabla F(\widehat{w}) - \nabla \widehat{F}_n(\widehat{w})\right\|_2.$$

Using (3.8), (**??**), and Lemma 7, applied with $B = 1$, we have that with probability at least $1 - \delta$,

$$\left\|\nabla F(\widehat{w}) - \nabla \widehat{F}_n(\widehat{w})\right\|_2 \leq O\left(R^2 C_\sigma^2 \sqrt{\frac{\log(1/\delta)}{n}} \right),$$

and so

$$F(\widehat{w}) - F(w^\star) \leq O\left(\lambda \frac{C_\sigma}{c_\sigma} + \frac{R^2 C_\sigma^3}{c_\sigma} \sqrt{\frac{\log(1/\delta)}{n}} \right).$$

Substituting in the choice for λ:

$$\leq O\left(\frac{R^2 C_\sigma^4}{c_\sigma^2} \cdot \sqrt{\frac{\log(\log(C_\sigma R n)/\delta)}{n}} \right).$$

□

Lemma 10. *Let F and $\widehat{F}_n$ be the population and empirical risk for the generalized linear model setting. Let a parameter $B_{\max} \geq 1$ be given. Then with probability at least $1-\delta$, for all $w \in \mathbb{R}^d$ with $1 \leq \|w\|_2 \leq B_{\max}$,*

$$\left\|\nabla F(w) - \nabla \widehat{F}_n(w)\right\|_2 \leq O\left(\|w\|_2 R^2 C_\sigma^2 \sqrt{\frac{1}{n}} + C_\sigma R \sqrt{\frac{\log(\log(B_{\max})/\delta)}{n}}\right),$$

where all constants are as in Assumption 3.

Proof. (3.8), (**??**), and Lemma 7 imply that for any fixed B, with probability at least $1-\delta$,

$$\sup_{w:\|w\|_2 \leq B} \left\|\nabla F(w) - \nabla \widehat{F}_n(w)\right\| \leq O\left(B R^2 C_\sigma^2 \sqrt{\frac{1}{n}} + C_\sigma R \sqrt{\frac{\log\left(\frac{1}{\delta}\right)}{n}}\right).$$

Define $B_i = e^{i-1}$ for $1 \leq i \leq \lceil \log(B_{\max}) \rceil + 1$. The via a union bound, we have that for all i simultaneously,

$$\sup_{w:\|w\|_2 \leq B_i} \left\|\nabla F(w) - \nabla \widehat{F}_n(w)\right\| \leq O\left(B_i R^2 C_\sigma^2 \sqrt{\frac{1}{n}} + C_\sigma R \sqrt{\frac{\log(\log(B_{\max})/\delta)}{n}}\right).$$

In particular, for any fixed w with $1 \leq \|w\|_2 \leq B_{\max}$, if we take i to be the smallest index for which $\|w\|_2 \leq B_i$, the expression above implies

$$\left\|\nabla F(w) - \nabla \widehat{F}_n(w)\right\|_2 \leq O\left(\|w\|_2 R^2 C_\sigma^2 \sqrt{\frac{1}{n}} + C_\sigma R \sqrt{\frac{\log(\log(B_{\max})/\delta)}{n}}\right),$$

since $B_i \leq e\|w\|_2$. □

Analysis of mirror descent for high-dimensional setting. Here we show that mirror descent obtains optimal excess risk for the norm-based/high-dimensional regime in Theorem 8 and Theorem 9.

Our approach is to run mirror descent with $\Psi^\star$ as the regularizer. Observe that $\Psi^\star$ is $\frac{1}{\beta}$-strongly convex with respect to the dual norm $\|\cdot\|_\star$, and that we have

$\|\nabla \ell(w\,; x, y)\| \leq 2C_\sigma R$ for the GLM setting and $\|\nabla \ell(w\,; x, y)\| \leq C_\rho R$ for the RR setting.

Focusing on the GLM, if we take a single pass over the entire dataset $\{(x_t, y_t)\}_{t=1}^n$ in order, the standard analysis for mirror descent starting at $w_1 = 0$ with optimal learning rate tuning (Hazan, 2016) guarantees that the following inequality holds deterministically:

$$\frac{1}{n}\sum_{t=1}^{n}\langle \nabla \ell(w_t\,; x_t, y_t), w_t - w^\star\rangle \leq O\left(RBC_\sigma\sqrt{\frac{\beta}{n}}\right).$$

Since each point is visited a single time, this leads to the following guarantee on the population loss in expectation

$$\mathbb{E}\left[\frac{1}{n}\sum_{t=1}^{n}\langle \nabla F(w_t), w_t - w^\star\rangle\right] \leq O\left(RBC_\sigma\sqrt{\frac{\beta}{n}}\right).$$

Consequently, if we define $\widehat{w}$ to be the result of choosing a single time $t \in [n]$ uniformly at random and returning w_t, this implies that

$$\mathbb{E}[\langle \nabla F(\widehat{w}), \widehat{w} - w^\star\rangle] \leq O\left(RBC_\sigma\sqrt{\frac{\beta}{n}}\right).$$

Combining this inequality with (3.20), we have

$$\mathbb{E}[F(\widehat{w}) - F(w^\star)] \leq O\left(RB\frac{C_\sigma^2}{c_\sigma}\sqrt{\frac{\beta}{n}}\right).$$

Likewise, combining the mirror descent upper bound with (3.29) leads to a rate of $O\left(RB\frac{C_\rho^2}{c_\rho}\sqrt{\frac{\beta}{n}}\right)$ for robust regression. Thus, when all parameters involved are constant, it suffices to take $n = \frac{1}{\varepsilon^2}$ to obtain $O(\varepsilon)$ excess risk in both settings.

CHAPTER 4

UNDERSTANDING SGD AND THE ROLE OF IMPLICIT REGULARIZATION

Multi-epoch, small-batch, Stochastic Gradient Descent (SGD) has been the method of choice for learning with large over-parameterized models. This chapter is dedicated to understanding various artifacts of the SGD algorithm, and its implications for learning.

SGD and Implicit Regularization. A popular theory for explaining why SGD works well in practice is that the algorithm has an implicit regularization that biases its output towards a good solution. It has been observed that in large models, often there are multiple global minima for the empirical loss. However not all of these empirical minima have low sub-optimality at the population level. SGD when used as the training algorithm often seems to find empirical (near) global minima that also generalize well and have low test loss**?**. Hence while a general Empirical Risk Minimization (ERM) algorithm might fail, the implicit bias of SGD seems to yield a well-generalizing ERM. The idea behind implicit regularization is that the solution of SGD is equivalent to the solution of a Regularized Empirical Risk Minimizer (RERM) for an appropriate implicit regularizer. Informally, it has been conjectured that the point $\widehat{w}$ returned by SGD is such that

$$\widehat{w} \approx \operatorname*{argmin}_{w \in \mathcal{W}} \ \widehat{F}_n(w) + R(w), \tag{4.1}$$

where $R(w)$ is an implicit regularizer that depends on the underlying learning problem.

The idea of implicit regularization of SGD has been extensively studied in recent years. In Gunasekar et al. (2018a), the classical setting of linear regression

(with square loss) is considered and it was shown that when considering over-parameterized setting, the SGD algorithm is equivalent to fitting with a linear predictor with the smallest euclidean norm. In Soudry et al. (2018); Ji and Telgarsky (2018) linear predictors with logistic loss are considered and it was noted that SGD for this setting can be seen as having an implicit regularization of ℓ_2 norm. Gunasekar et al. (2018b) considered multi-layer convolutional networks with linear activation are considered and showned that SGD for this model can be seen as having an implicit regularization of $\ell_{2/L}$ norm (bridge penality for depth L networks) of the Fourier frequencies corresponding to the linear predictor. Gunasekar et al. (2018c) considered matrix factorization and showed that running SGD is equivalent to having a nuclear norm based regularizer. More recent work of Arora et al. (2019); Razin and Cohen (2020) shows that in particular in the deep matrix factorization setting, SGD cannot be seen as having any norm based implicit regularizer but rather a rank based one. However, in all these cases, the behavior of SGD corresponds to regularization functions that are independent of the training data (e.g. rank, l_p-norm, etc).

One could surmise that a grand program for this line of research is that for problems where SGD works well, perhaps there is a corresponding implicit regularization explanation. That is, there exists a regularizer R such that SGD can been seen as performing exact or approximate RERM with respect to this regularizer. In fact, one can ask this question specific to SCO problems, one of the simplest stochastic optimization problems (see Section 2.1.1 for more details). That is, for the problem of SCO, is there an implicit regularizer R such that SGD can be seen as performing approximate RERM? In fact, a more basic question one can ask: is it true that SCO problem is always learnable using some regularized ERM algorithms? *In Section 4.2, we answer both these questions in the negative.*

SGD vs GD: Smaller the Batch-size Better the Generalization. It has been observed that in practice, while SGD with small batch size, and performing gradient descent (GD) with empirical loss as the objective function both minimize the training error equally well, the SGD solution generalizes much better than the full gradient descent one (Keskar et al., 2017; Kleinberg et al., 2018a). However, thus far, most existing literature on theorizing why SGD works well for over-parameterized deep learning models also work for gradient descent on training loss (Allen-Zhu and Li, 2019; Allen-Zhu et al., 2019a,b; Arora et al., 2018). In Section **??**, we construct a SCO problem where single pass SGD provably outperforms GD run on empirical loss, which converges to a solution that has large excess risk. We thus provide *a problem instance where SGD works but GD has strictly inferior sample complexity (with or without early stopping).*

Benefits of Multiple Epochs. The final empirical observation we consider is the fact that multiple epochs of SGD tends to further continually decrease not only the training error but also the test error (Zhang et al., 2021a; Ma et al., 2018b; Bottou and Bousquet, 2011). In Section 4.8.4, we construct *an SCO instance for which multiple epochs of single sample mini-batched SGD significantly outperforms single pass SGD*, and for the same problem, *RERM fails to converge to a good solution*, and hence, so does GD when run to convergence.

4.1 Recap: Learning setup and algorithms

Throughout this paper, we make the following assumption on the test loss and data-generating distribution $\mathcal{D}$:

$$\textbf{Assumption:} \begin{cases} F \text{ is } L\text{-Lipschitz (w.r.t. } \ell_2 \text{ norm)} \\ \exists w^\star \in \operatorname{argmin}_w F(w) \text{ s.t. } \|w_1 - w^\star\| \leq B \cdot \\ \sup_w \mathbb{E}_{z\sim D} \|\nabla f(w,z) - \nabla F(w)\|^2 \leq \sigma^2 \end{cases} \tag{4.2}$$

In the above the norm denotes the standard Euclidean norm and w_1 is some initial point known to the algorithm. Next, we describe below more formally what the regularized ERM, GD and SGD algorithms are.

(Regularized) Empirical Risk Minimization. Perhaps the simplest algorithm one could consider is the Empirical Risk Minimization (ERM) algorithm where one returns a minimizer of training loss (empirical risk)

$$F_S(w) := \frac{1}{n}\sum_{t=1}^{n} f(w; z_t) \ .$$

That is, $w_{\text{ERM}} \in \operatorname{argmin}_{w\in\mathcal{W}} F_S(w)$. A more common variant of this method is one where we additionally penalize complex models using a regularizer function $R : \mathbb{R}^d \mapsto \mathbb{R}$. That is, a Regularized Empirical Risk Minimization (RERM) method consists of returning:

$$w_{\text{RERM}} = \operatorname*{argmin}_{w\in\mathcal{W}} F_S(w) + R(w). \tag{4.3}$$

Gradient Descent (GD) on Training Loss. Gradient descent on training loss is the algorithm that performs the following update on every iteration:

$$w_{i+1}^{\text{GD}} \leftarrow w_i^{\text{GD}} - \eta \nabla F_S(w_i^{\text{GD}}), \tag{4.4}$$

where η denotes the step size. After t rounds, we return the point $\widehat{w}_t^{\mathrm{GD}} := \frac{1}{t}\sum_{i=1}^{t} w_i^{\mathrm{GD}}$.

Stochastic Gradient Descent (SGD). Stochastic gradient descent (SGD) has been the method of choice for training large over-parameterized deep learning models, and other convex and non-convex learning problems. Single pass SGD algorithm runs for n steps and for each step takes a single data point and performs gradient update with respect to that sample. That, is on round t,

$$w_{i+1}^{\mathrm{SGD}} \leftarrow w_i^{\mathrm{SGD}} - \eta \nabla f(w_i^{\mathrm{SGD}}; z_i) \tag{4.5}$$

Finally, we return $\widehat{w}_n^{\mathrm{SGD}} = \frac{1}{n}\sum_{i=1}^{n} w_i^{\mathrm{SGD}}$. Multi-epoch (also known as multi-pass) SGD algorithm simply cycles over the dataset multiple times continuing to perform the same update specified above. It is well know that single pass SGD algorithm enjoys the following convergence guarantee:

Theorem 12 (Nemirovski and Yudin (1983a))**.** *On any SCO problem satisfying Assumption I in* (**??**) *and Assumption II in* (4.2)*, running SGD algorithm for n steps with the step size of $\eta = 1/\sqrt{n}$ enjoys the guarantee*

$$\mathbb{E}_S[F(\widehat{w}_n^{\mathrm{SGD}})] - \inf_{w \in \mathbb{R}^d} F(w) \leq O\Big(\frac{1}{\sqrt{n}}\Big),$$

where the constant in the order notation only depends on constants B, L and σ in (4.2) *and is independent of the dimension d.*

4.2 Regularized ERM, Implicit Regularization and SGD

In Shalev-Shwartz et al. (2009) (see also Feldman (2016)), SCO problems where not just the population loss F but where also for each $z \in \mathcal{Z}$, the instantaneous

loss $f(\cdot, z)$ is convex is considered. In this setting, the authors show that the appropriate ℓ_2 norm square regularized RERM always obtains the optimal rate of $1/\sqrt{n}$. However, for SGD to obtain a $1/\sqrt{n}$ guarantee, one only needs convexity at the population level. In this section, based on construction of SCO problems that are convex only at population level and not at the empirical level, we show a strict separation between SGD and RERM. Specifically, while SGD is always successful for any SCO problem we consider here, we show that for any regularizer R, there is an instance of an SCO problem for which RERM with respect to this regularizer has suboptimality lower bounded by a constant.

Theorem 13. *For any regularizer R, there exists an instance of a SCO problem that satisfies both Assumptions I and II given in Equations (**??**) and (4.2), for which*

$$\mathbb{E}_S[F(w_{\text{RERM}})] - \inf_{w \in \mathbb{R}^d} F(w) \geq \Omega(1),$$

where w_{RERM} is the solution to (4.3) with respect to the prescribed regularizer.

The regularizer R we consider in the above result is sample independent, that is, it has to be chosen before receiving any samples. In general, if one is allowed an arbitrary sample dependent regularizer, one can encode any learning algorithm as an RERM. This is because, for any algorithm, one can simply contrive the regularizer R to have its minimum at the output model of the algorithm on the given sample, and a very high penalty on other models. Hence, to have a meaningful comparison between SGD (or for that matter any algorithm) and RERM, one can either consider sample independent regularizers or at the very least, consider only some specific restricted family of sample dependent regularizers. One natural variant of considering mildly sample dependent regularizers is to first, in a sample independent way pick some regularization function R and then allow arbitrary

sample dependent regularization parameters that multiply the regularizer R. The following corollary shows that even with such mildly data dependent regularizers, one can still find SCO instances for which the RERM solution has no non-trivial convergence guarantees.

Corollary 1. *For any regularizer R, there exists an instance of a SCO problem that satisfies both Assumptions I and II, for which the point $w_{\text{RERM}} = \operatorname{argmin}_{w\in\mathcal{W}} F_S(w) + \lambda R(w)$, where λ is any arbitrary sample dependent regularization parameter, has the lower bound*

$$\mathbb{E}_S[F(w_{\text{RERM}})] - \inf_{w\in\mathbb{R}^d} F(w) \geq \Omega(1).$$

The SCO problem in Theorem 13 and Corollary 1 is based on the function $f_{(A)}$ given by[1]

$$f_{(A)}(w; z) = y\|(w - \alpha) \odot x\|, \tag{A}$$

where each instance $z \in \mathcal{Z}$ can be written as a triplet $z = (x, y, \alpha)$ and the notation $\odot$ denotes Hadamard product (entry wise product) of the two vectors. We set $x \in \{0, 1\}^d$, $y \in \{\pm 1\}$ and $\alpha \in \{0, e_1, \ldots, e_d\}$ where e_1 to e_d denote the standard basis in d dimensions. We also set $d > 2^n$.

In the following, we provide a sketch for why ℓ_2-norm square regularization fails and show no regularization parameter works. In the detailed proof provided in the Appendix, we deal with arbitrary regularizers. The basic idea behind the proof is simple, Consider the distribution: $x \sim \text{Unif}(\{0, 1\})^d$, and y is set to be $+1$ with probability 0.6 and -1 with probability 0.4, and set $\alpha = e_1$ deterministically. In this case, note that the population function is $0.2\,\mathbb{E}_{x\sim\text{Unif}\{0,1\}^d} \|x \odot (w - e_1)\|_2$ which

[1]The function $f_{(A)}$ can be expressed using a deep neural networks with some weights fixed. The exact constructions are presented in (Sekhari et al., 2021c).

is indeed convex, Lipchitz and sandwiched between $0.1\|w - e_1\|$ and $0.2\|w - e_1\|$. Hence, any ε sub-optimal solution $\widehat{w}$ must satisfy $\|\widehat{w} - e_1\| \leq 10\varepsilon$.

Since $d > 2^n$, with constant probability there is at least one coordinate, say $\widehat{j} \in [d]$, such that for any data sample (x_t, y_t) for $t \in [n]$, we have $x_t[\widehat{j}] = 0$ whenever $y_t = +1$ and $x_t[\widehat{j}] = 1$ whenever $y_t = -1$. Hence, ERM would simply put large weight on the $\widehat{j}$ coordinate and attain a large negative value for training loss (as an example, $w = e_{\widehat{j}}$ has a training loss of roughly -0.4). However, for test loss to be small, we need the algorithm to put little weight on coordinate $\widehat{j}$. Now for any square norm regularizer $R(w) = \lambda\|w\|_2^2$, to prevent RERM from making this $\widehat{j}$ coordinate large, λ has to be at least as large as a constant.

However, we already argued that any ε sub-optimal solution $\widehat{w}$ should be such that $\|\widehat{w} - e_1\| \leq 10\varepsilon$. When λ is chosen to be as large as a constant, the regularizer will bias the solution towards 0 and thus the returned solution will never satisfy the inequality $\|\widehat{w} - e_1\| \leq 10\varepsilon$. This leads to a contradiction: To find an ε sub-optimal solution, we need a regularization that would avoid picking large value on the spurious coordinate $\widehat{j}$ but on the other hand, any such strong regularization, will not allow RERM to pick a solution that is close enough to e_1. Hence, any such regularized ERM cannot find an ε sub-optimal solution. This shows that no regularization parameter works for norm square regularization. In the Appendix we expand this idea for arbitrary regularizers R.

The construction we use in this section has dimensionality that is exponential in number of samples n. However similarly modifying the construction in Feldman (2016), using the $y = \pm 1$ variable multiplying the construction there, one can extend this result to a case where dimensionality is $\Theta(n)$. Alternatively, noting that for the maximum deviation from mean over d coordinates is of order $\sqrt{\log d/n}$,

one can use a simple modification of the exact construction here, and instead of getting the strong separation like the one above where RERM does not learn but SGD does, one can instead have $d = n^p$ for $p \in (0, 1]$ and obtain a separation where SGD obtains the $1/\sqrt{n}$ rate but no RERM can beat a rate of order $\sqrt{\log n/n}$.

Implicit Regularization. As mentioned earlier, a proposed theory for why SGD algorithms are so successful is that they are finding some implicitly regularized empirical risk minimizers, and that this implicit bias helps them learn effectively with low generalization error. However, at least for SCO problems, the above strict separation result tells us that SGD cannot be seen as performing implicitly regularized ERM, neither exactly nor approximately.

Connections to prior works. On the topic of RERM, implicit regularization and SGD, perhaps the work most relevant to this paper is that of Dauber et al. (2020). Just like this work, they also consider the general setting of stochastic convex optimization (SCO) and show that for this setting, for no so-called *"admissible"* data independent regularizer, SGD can be seen as performing implicit regularized ERM. For the implicit regularization part of our work, while in spirit the work aims at accomplishing some of the similar goals, their work is in the setting where the instantaneous losses are also convex and Lipschitz. This means that, for their setting, while SGD and regularized ERM may not coincide, regularized ERM is indeed still an optimal algorithm as shown in Shalev-Shwartz et al. (2009). In this work we show a strict separation between SGD and RERM with an example where SGD works but no RERM can possibly provide a non-trivial learning guarantee. Second, qualitatively, their separation result in Theorems 2 and 3 are somewhat unsatisfactory. This is because while they show that for every regularizer there is

a distribution for which the SGD solution is larger in value than the regularized training loss of the regularized ERM w.r.t. that regularizer, the amount by which it is larger can depend on the regularizer and can be vanishingly small. Hence it might very well be that SGD is an approximate RERM. In fact, if one relaxes the requirement of their admissible relaxations then it is possible that their result doesn't hold. For instance, for square norm regularizer, the gap on regularized objective between RERM and SGD is only shown to be as large as the regularization parameter which is typically set to be a diminishing function of n.

4.3 Gradient Descent (Large-batch) vs SGD (Small-batch)

In the previous section, we provided an instance of a SCO problem on which no regularized ERM works as well as SGD. When gradient descent algorithm (specified in (5.1)) is used for training, one would expect that GD, and in general large batch SGD, will also eventually converge to an ERM and so after enough iterations would also fail to find a good solution. In this section, we formalize this intuition to provide lower bounds on the performance of GD.

Theorem 14. *There exists an instance of a SCO problem such that for any choice of step size η and number of iterations T, the following lower bound on performance of GD holds:*

$$\mathbb{E}_S[F(\widehat{w}_T^{GD})] - \inf_{w\in\mathbb{R}^d} F(w) \geq \Omega\Big(\frac{1}{n^{5/12}}\Big).$$

Theorem 14 suggests that there is an instance of a SCO problem for which the performance of GD is lower bound by $1/n^{0.42}$. On the other hand, SGD with the step size of $\eta = 1/n^{0.5}$ learns at a rate of $1/n^{0.5}$ for this problem. This suggests

that GD (large batch size) is a worse learning algorithm than SGD. We defer the proof to Section 4.8.3 and give a brief sketch below.

Our lower bound proof builds on the recent works of Amir et al. (2021), which gives an instance of a SCO problem for which the performance guarantee of GD algorithm is $\Omega(\eta\sqrt{T} + 1/\eta T)$. We provide an instance of a SCO problem for which GD has a lower bound of $\Omega(\eta T/n)$. Adding the two instances together gives us an SCO problem for which GD has lower bound of

$$\Omega\Big(\eta\sqrt{T} + \frac{1}{\eta T} + \frac{\eta T}{n}\Big). \tag{4.6}$$

This lower bound is by itself not sufficient. In particular, for $\eta = 1/n^{3/2}$ and $T = n^2$, the right hand side of (4.6) evaluates to $O(1/\sqrt{n})$, which matches the performance guarantee of SGD for this SCO problem. Hence, this leaves open the possibility that GD may work as well as SGD. However, note that in order to match the performance guarantee of SGD, GD needs to be run for quadratically more number of steps and with a smaller step size. In fact, we can show that in order to attain a $O(1/\sqrt{n})$ rate in (4.6), we must set $\eta = O(1/n^{3/2})$ and $T = \omega(n^2)$.

The lower bound in Theorem 14 follows by adding to the SCO instance in (4.6) another objective that rules out small step-sizes. This additional objective is added by increasing the dimensionality of the problem by one and on this extra coordinate adding a stochastic function that is convex in expectation. The expected loss on this coordinate is a piecewise linear convex function. However, the stochastic component on this coordinate has random kinks at intervals of width $1/n^{5/4}$ that vanish in expectation, but can make the empirical loss point in the opposite direction with probability 1/2. Since the problem is still an SCO problem, SGD works as earlier. On the other hand, when one considers training loss, there are up to n of these kinks and roughly half of them make the training loss flat. Thus,

if GD is used on training loss with step size smaller than $1/n^{5/4}$ then it is very likely that GD hits at least one such kink and will get stuck there. This function, thus, rules out GD with step size η smaller than $1/n^{5/4}$. Restricting the step size $\eta = \Omega(1/n^{5/4})$, the lower bound in (4.6) evaluates to the $\Omega(1/n^{5/12})$ giving us the result of Theorem 14.

Connections to prior work. On the topic of comparison of GD on training loss with single epoch SGD, one can hope for three kinds of separation. First, separation in terms of work (number of gradient computations), second, separation in terms of number of iterations, and finally separation in terms of sample complexity. The classic result from Nemirovski and Yudin (1983a), given in Theorem 1, tells us that for the SCO setting, the number of gradient computations required for SGD to obtain a suboptimality guarantee of ε is equal to the optimal sample complexity (for ε) and hence is optimal (in the worst case). On the other hand, a single iteration of GD on training loss requires the same number of gradient computations and hence any more than a constant number of iterations of GD already gives a separation between GD and SGD in terms of work. This result has been explored in Shalev-Shwartz et al. (2007) for instance. The separation of GD and SGD in terms of number of iterations has been considered in Amir et al. (2021). Amir et al. (2021) demonstrate a concrete SCO problem on which GD on the training loss requires at least $\Omega(1/\varepsilon^4)$ steps to obtain an ε-suboptimal solution for the test loss. Whereas, SGD only requires $O(1/\varepsilon^2)$ iterations. However, their result does not provide any separation between GD and SGD in terms of sample complexity. Indeed, in their example, using the upper bound for GD using Bassily et al. (2020) one can see that if GD is run on n samples for $T = n^2$ iterations with the appropriate step size, then it does achieve a $1/\sqrt{n}$ suboptimality. In compari-

son our work provides a much stronger separation between GD and SGD. We show a sample complexity separation, meaning that to obtain a specific suboptimality, GD requires more samples than SGD, irrespective of how many iterations we run it for. Our separation result also yields separation in terms of both number of iterations and number of gradient computations.

Finally, we mention that our lower bound in (4.6) matches the recently shown performance guarantee for GD algorithm by Bassily et al. (2020); albeit under slightly different assumptions on the loss function $f(\cdot; z)$. Their work assumes that the loss functions $f(w; z)$ is convex in w for every $z \in \mathcal{Z}$. On the other hand, we do not require convexity of f but only that $F(w)$ is convex in w.

4.4 Single-pass vs Multi-pass SGD

State of the art neural networks are trained by taking multiple passes of SGD over the dataset. However, it is not well understood when and why multiple passes help. In this section, we provide theoretical insights into the benefits of taking multiple passes over the dataset. The multi-pass SGD algorithm that we consider is given in Algorithm 1. In particular, at the start of every epoch, Algorithm 1 uses the following projection operation:

$$\Pi_{w_1,B}(w) = \begin{cases} w & \text{if } \|w - w_1\| \leq B \\ w_1 + \frac{B}{\|w-w_1\|}(w - w_1) & \text{otherwise.} \end{cases}$$

This ensures that the iterate at the start of every epoch has bounded norm.

The next result shows that the above multi-pass SGD algorithm performs at least as well as taking a single pass of SGD.

Algorithm 1 Multi-pass SGD algorithm

Input: Dataset $S = \{z_i\}_{i=1}^n$, number of passes k, initial point w_1.

Define $m := n/2$, $S_1 := \{z_i\}_{i=1}^m$ and $S_2 := S \setminus S_1$
Initialize $\widehat{\mathcal{W}} \leftarrow \emptyset$
for $j = 1, \ldots, k$ **do** ▷ Multiple passes
    $w_{m(j-1)+1} \leftarrow \Pi_{w_1,B}(w_{m(j-1)+1})$
    $\eta_j \leftarrow \frac{1}{\sqrt{nj}}$
    for $i = 1, 3, \ldots, m$ **do**
        $w_{m(j-1)+i+1} \leftarrow w_{m(j-1)+i} - \eta_j \nabla f(w_{m(j-1)+i}; z_i)$.
    $\widehat{w}_j \leftarrow \frac{1}{mj} \sum_{t=1}^{mj} w_j$
    $\widehat{\mathcal{W}} \leftarrow \widehat{\mathcal{W}} \cup \{\widehat{w}_j\}$
▷ Validation
Return the point $\widehat{w}^{\mathrm{MP}} \in \operatorname{argmin}_{w \in \widehat{\mathcal{W}}} F_{S_2}(W) := \frac{1}{m} \sum_{i=1}^m f(w; z_{m+1})$

Proposition 3. *The output $\widehat{w}^{\mathrm{MP}}$ of multipass-SGD algorithm satisfies*

$$\mathbb{E}_S[F(\widehat{w}^{\mathrm{MP}})] \leq \mathbb{E}_S[F(\widehat{w}_{n/2}^{\mathrm{SGD}})] + \widetilde{O}\Big(\frac{1}{\sqrt{n}}\Big),$$

where $\widehat{w}_{n/2}^{\mathrm{SGD}}$ denotes the output of running (one pass) SGD algorithm for $n/2$ steps with the step size of $1/\sqrt{n}$.

This suggests that the output point of the above multi-pass SGD algorithm is not too much worse than that of SGD (single pass). For problems in SCO, SGD has a rate of $O(1/\sqrt{n})$ (see Theorem 12), and in for these problems, the above bound implies that multi-pass SGD also enjoys the rate of $\widetilde{O}(1/\sqrt{n})$.

Multiple Passes Can Help! In certain favorable situations the output of multi-pass SGD can be much better:

Theorem 15. *Let k be a positive integer and let $R(\cdot)$ be a regularization function. There exists an instance of a SCO problem such that:*

(a) *For any step size η, the output of the SGD algorithm has the lower bound*

$$\mathbb{E}_S[F(\widehat{w}_n^{SGD})] - \inf_{w\in\mathbb{R}^d} F(w) \geq \Omega\Big(\frac{1}{\sqrt{n}}\Big).$$

Furthermore, running SGD with $\eta = 1/\sqrt{n}$ achieves the above $1/\sqrt{n}$ rate.

(b) *On the other hand, multi-pass SGD algorithm with k passes has the following guarantee:*

$$\mathbb{E}_S[F(\widehat{w}^{\mathrm{MP}})] - \inf_{w\in\mathbb{R}^d} F(w) \leq O\Big(\frac{1}{\sqrt{nk}}\Big).$$

(c) *RERM algorithm has the lower bound: $\mathbb{E}_S[F(w_{\mathrm{RERM}})] - \inf_{w\in\mathbb{R}^d} F(w) \geq \Omega(1)$.*

We defer the proof details to Section 4.8.4 and provide the intuition below. Parts (a) and (b) follow easily by taking a standard construction in (Nesterov, 2014, Section 3.2.1). Here, a convex deterministic function F_N over an optimization variable v is provided such that Assumption II is satisfied with $L, B = O(1)$, and any gradient based scheme (such as SGD, which is equivalent to GD on F_N) has a suboptimality of $\Omega(1/\sqrt{n})$ after n iterations (which corresponds to single pass SGD). On the other hand, because F_N satisfies Assumption II, k passes of SGD, which correspond to nk iterations of GD, will result in suboptimality of $O(1/\sqrt{nk})$ for the given step sizes.

The more challenging part is to prove part (c). It is tempting to simply add the SCO instance from Theorem 13, but that may break the required upper bound of $O(1/\sqrt{nk})$ for multipass SGD. To get around this issue, we construct our SCO instance by making z consist of k components $\{\xi_1, \ldots, \xi_k\}$ drawn independently from the distribution considered in Theorem 13. Furthermore, the loss function considered in Theorem 13 also defines the loss corresponding to each ξ_i component for an optimization variable w that is different from the optimization variable v.

The key idea in the construction is that, while each data sample consists of k independently sampled components, at any time step, SGD gets to see only one of these components. Specifically, in the first pass over the dataset, we only observe the ξ_1 component of every sample, and in the second pass we only observe the ξ_2 component for every sample and so on for further passes. This behavior for SGD is induced by using an independent control variable u. The optimization objective for u is such that SGD increases u monotonically with every iteration. The value of u controls which of the ξ_i components is observed during that time step. In particular, when we run our multipass SGD algorithm, during the first pass, the value of u is such that we get to see ξ_1 only. However, on the second pass, u has become large enough to reveal $\xi_s 2$, and so on for further passes. Thus, in k passes, multipass SGD gets to see nk "fresh" samples and hence achieves an suboptimality of $O(1/\sqrt{nk})$, as required in part (b). Finally, part (c) follows from the same reasoning as in Theorem 13 since the same SCO instance is used.

4.5 Distribution Free Learning

In this section, we consider the general learning setting (Vapnik, 2013) and aim for a distribution free learnability result. That is, we would like to provide problem settings where one has suboptimality that diminishes with n for any distribution over the instance space $\mathcal{Z}$. For the SCO setting we considered earlier, the assumptions in (**??**) and the assumption in (4.2) that the population loss is convex, imposes restrictions on the distributions allowed to be considered. Specifically, since $f(\cdot\,; z)$ need not be convex for every z, one can easily construct distributions for which the problem is not SCO and in fact, may not even be learnable. E.g., consider the distribution that puts all its mass on z for which $f(\cdot\,; z)$ is non-convex. In this

section we will consider problems that are so called learnable, meaning that there is a learning algorithm with diminishing in n suboptimality for any distribution $\mathcal{D}$ on the instance space $\mathcal{Z}$. Under this setting, we show a separation between SGD and RERM. Specifically, we provide a problem instance that is learnable at a rate of $c_n > \Omega(1/n^{1/4})$ for any distribution over the instance space $\mathcal{Z}$. In particular, we show that the worst case rate of SGD is c_n for this problem. However, on the subset of distributions for which the problem is SCO, SGD as expected obtains a rate of $1/\sqrt{n}$. On the other hand, for the same problem we show that RERM while having worst case rate no better than c_n, has a lower bound of $\Omega(c_n^2)$ on SCO instances.

Our lower bound in this section is based on the following learning setting: For $d > 2^n$, let $\mathcal{Z} = \{0,1\}^d \times \{0, e_1, \ldots, e_d\}$ be the instance space, let the instantaneous loss function be given by:

$$f_{(B)}(w; z) = \frac{1}{2}\|(w-\alpha) \odot x\|^2 - \frac{c_n}{2}\|w-\alpha\|^2 + \max\{1, \|w\|^4\}, \tag{B}$$

where $z = (x, \alpha)$ and $c_n := n^{-(\frac{1}{4}-\gamma)}$ for some $\gamma > 0$.

Additionally, let $\mathscr{D}_c$ denote the set of distributions over instances space $\mathcal{Z}$ for which F is convex. Specifically,

$$\mathscr{D}_c := \big\{\mathcal{D} \mid F(w) = \mathbb{E}_{z\sim\mathcal{D}}\big[f_{(B)}(w,z)\big] \text{ is convex in } w\big\}. \tag{4.7}$$

Note that under the distributions from $\mathscr{D}_c$, the problem is an instance of an SCO problem. We show a separation between SGD and RERM over the class $\mathscr{D}_c$. In the theorem below we claim that the above learning problem is learnable with a worst case rate of order c_n (by SGD), and whenever $\mathcal{D} \in \mathscr{D}_c$, SGD learns at a faster rate of $1/\sqrt{n}$. To begin with we first provide the following proposition for the problem described by the function $f_{(B)}$ that shows that no algorithm can have a worst case

rate better than c_n for this problem.

Proposition 4. *For any algorithm* ALG *that outputs* $\widehat{w}^{\mathrm{ALG}}$*, there is a distribution* $\mathcal{D}$ *on the instance space, such that for the learning problem specified by function* $f_{(B)}$*:*

$$\mathbb{E}_S[F(\widehat{w}^{\mathrm{ALG}})] - \inf_{w \in \mathcal{W}} F(w) \geq \frac{c_n}{4}$$

Next, we show that SGD obtains this worst case rate, and a much better rate of $1/\sqrt{n}$ for any distribution in $\mathscr{D}_c$. However, we also show that for this problem, no RERM can obtain a rate better than c_n^2 for every distribution in $\mathscr{D}_c$. This shows that while SGD and RERM have the same worst case rate, SGD outperforms any RERM whenever the problem turns out to be convex.

Theorem 16. *For the learning problem specified by function* $f_{(B)}$*:*

(a) For every regularizer R*, there exists a distribution* $\mathcal{D} \in \mathscr{D}_c$ *such that,*

$$\mathbb{E}_S[F(w_{\mathrm{RERM}})] - \inf_{w \in \mathbb{R}^d} F(w) \geq \Omega(c_n^2).$$

(b) For the SGD algorithm we have the following upper bounds:

$$\forall \mathcal{D} \in \mathscr{D}_c, \;\; \mathbb{E}_S[F(\widehat{w}_n^{\mathrm{SGD}})] - \inf_{w \in \mathbb{R}^d} F(w) \leq O\left(\frac{1}{\sqrt{n}}\right),$$

$$\forall \mathcal{D} \notin \mathscr{D}_c, \;\; \mathbb{E}_S[F(\widehat{w}_n^{\mathrm{SGD}})] - \inf_{w \in \mathbb{R}^d} F(w) \leq O\left(c_n\right).$$

As an example, plugging in $c_n = n^{-\frac{1}{8}}$ implies that when $\mathcal{D} \notin \mathscr{D}_c$, the suboptimality of SGD is bounded by $O(1/n^{1/8})$, and when $\mathcal{D} \in \mathscr{D}_c$, the suboptimality of SGD is bounded by $O(1/\sqrt{n})$. However, for any RERM, there exists a distribution $D \in \mathscr{D}_c$, on which the RERM has a suboptimality of $\Omega(1/n^{1/4})$ and the worst case rate of any RERM is also $n^{-1/8}$. This suggests that SGD is a superior algorithm to RERM for any regularizer R, even in the distribution free learning setting.

4.6 Extensions to deep learning problems

While the classic convergence proof for SGD is shown for SCO setting, a reader familiar with the proof technique will recognize that the same result also holds when we only assume that the population loss F is star-convex or one-point-convex with respect to any optimum w^*, or in fact even if it is star-convex only on the path of SGD. The following definition of Linearizable population loss generalizes star-convexity and one-point-convexity.

Definition 10 (α-Linearizable)**.** *A stochastic optimization problem with population loss $F(w)$ is α-Linearizable if there exists a $w^* \in \operatorname{argmin} F(w)$ such that for every point $w \in \mathbb{R}^d$,*

$$F(w) - F(w^*) \leq \alpha \langle \nabla F(w), w - w^* \rangle.$$

For linearizable function, one can upper bound the suboptimality at any point w by a linear function given by $\nabla F(w)$. The convergence guarantee for SGD now follows by bounding the cumulative sum of this linear function using standard arguments, giving us the following performance guarantee for SGD.

Theorem 17. *On any α-Lineariazable stochastic optimization problem satisfying Assumption II in (4.2), running SGD algorithm for n steps with the step size of $\eta = 1/\sqrt{n}$ enjoys the guarantee:*

$$\mathbb{E}_S[F(\widehat{w}_n^{\mathrm{SGD}})] - \inf_{w \in \mathbb{R}^d} F(w) \leq O\Big(\frac{\alpha}{\sqrt{n}}\Big),$$

where the constant in the order notation only depends on constants B, L and σ in (4.2) and is independent of the dimension d.

The hypothesis that this phenomenon is what makes SGD successful for deep learning has been proposed and explored in various forms (Zhou et al., 2019; Kleinberg

et al., 2018a). On the other hand our lower bound results hold even for the simpler SCO setting. Of course, to claim such a separation of SGD with respect to GD or RERM in the deep learning setting, one would need to show that our lower bound constructions can be represented as deep neural networks with roughly the same dimensionality as the original problem. In fact, all the functions that we considered so far can be easily expressed by restricted deep neural networks (where some weights are fixed) with square activation functions as we show in Section **??**. Although, it would be a stretch to claim that practical neural networks would look anything like our restricted neural network constructions; it still opens the possibility that the underlying phenomena we exploit to show these separations hold in practical deep learning setting. In the following, we give an example of a simple two layer neural network with ReLU activation function where SGD enjoys a rate of $1/\sqrt{n}$, but any ERM algorithm fails to find an $O(1)$-suboptimal solution.

Let the input sample (x, y) be such that $x \in \{0, 1\}^d$ and $y \in \{-1, 1\}$. Given the weights $w = (w_1, w_2)$, where $w_1 \in \mathbb{R}^d$ and $w_2 \in \mathbb{R}^d$, we define a two layer ReLU neural network that on the input x outputs

$$h(w; x) = \mathrm{ReLU}(w_2^\top \mathrm{ReLU}(w_1 \odot x)).$$

This is a two layer neural network with the input layer having a diagonal structure and output layer being fully connected (hence the name diagonal neural network). Suppose the network is trained using the absolute loss, i.e. on data sample $z = (x, y)$ and for weights $w = (w_1, w_2)$, we use the loss

$$f(w; z) = |y - h(w; z)| = |y - \mathrm{ReLU}(w_2^\top \mathrm{ReLU}(w_1 \odot x))|. \tag{4.8}$$

Theorem 18 (Two layer diagonal network)**.** *For the loss function given in (4.8) using a two layer diagonal neural network, there exists a distribution $\mathcal{D}$ over the instance space $\mathcal{Z}$ such that:*

(a) *$F(w)$ is $1/2$-Linearizable, and thus SGD run with step-size $1/\sqrt{n}$ has excess risk $O(1/\sqrt{n})$.*

(b) *For $d \geq 2^n$, with probability at least 0.9, ERM algorithm fails to find an $O(1)$-suboptimal point.*

Remark 1. *The result of Theorem 18 can be extended to diagonal two layer neural networks trained with linear loss $f(w; z) = yh(w; x)$, or with hinge loss $f(w; x) = \max\{0, 1 - yh(w; z)\}$.*

While the above result shows that for a simple two layer neural network, SGD performs better than ERM, our construction requires the first layer to be diagonal. It is an interesting future research direction to explore whether a similar phenomena can be demonstrated in more practical network architectures, for eg. fully connected networks, convolutional neural networks (CNN), recurrent neural networks (RNN), etc. It would also be interesting to extend our lower bounds for GD algorithm from Section 4.3 to these network architectures. The key idea is that SGD only requires certain nice properties (eg. convex, Linearizable, etc) at the population level, which might fail to hold at the empirical level in large dimensional models; hence, batch algorithms like GD and RERM might fail.

4.7 Discussion

In this chapter we provided theoretical insights into why SGD learns. Our key contributions are:

1. **SGD and RERM Separation.** In Section 4.2, we demonstrate a SCO problem where a single pass of SGD over n data points obtains a $1/\sqrt{n}$ suboptimal-

ity rate. However, for any regularizer R, regularized ERM does not attain a diminishing suboptimality. We show that this is true even if the regularization parameter is chosen in a sample dependent fashion. Our result immediately rules out the explanation that SGD is successful in SCO due to some some implicit regularization.

2. **SGD and GD Separation.** In Section 4.3, we provide a separation between SGD and GD on training loss in terms of sample complexity for SCO. To the best of our knowledge, this is the first[2] such separation result between SGD and GD in terms of sample complexity. In this work, we show the existence of SCO problems where SGD with n samples achieves a suboptimality of $1/\sqrt{n}$, however, irrespective of what step-size is used and how many iterations we run for, GD cannot obtain a suboptimality better than $1/(n^{5/12}\log^2(n))$.

3. **Single-pass vs Multi-pass SGD.** In Section 4.8.4, we provide an adaptive multi-epoch SGD algorithm that is provably at least as good as single pass SGD algorithm. On the other hand, we also show that this algorithm can far outperform single pass SGD on certain problems where SGD only attains a rate of $1/\sqrt{n}$. Also, on these problems RERM fails to learn, indicating that GD run to convergence fails as well.

4. **SGD and RERM Separation in the Distribution Free Agnostic PAC Setting.** The separation result between SGD and RERM introduced earlier was for SCO. However, it turns out that the problem is not agnostically learnable for all distributions but only for distributions that make F convex. In Section 4.5, we provide a learning problem that is distribution-free learnable, and where SGD provably outperforms any RERM.

[2]Despite the way the result is phrased in Amir et al. (2021), their result does not imply separation between SGD and GD in terms of sample complexity but only number of iterations.

5. **Beyond Convexity (Deep Learning).** The convergence guarantee for SGD can be easily extended to stochastic optimization settings where the population loss $F(w)$ is *linearizable*, but may not be convex. We formalize this in Section 4.6, and show that for two layer diagonal neural networks with ReLU activations, there exists a distribution for which the population loss is *linearizable* and thus SGD works, but ERM algorithm fails to find a good solution. This hints at the possibility that the above listed separations between SGD and GD / RERM for the SCO setting, also extend to the deep learning setting.

4.8 Detailed proofs

4.8.1 Basic probability results

Lemma 11. *Let $j^* \in [d]$. Let X be a $\{0,1\}^d$ valued random variable such that $X[j]$ is sampled independently from $\mathcal{B}(p)$ for every $j \in [d]$. Let the $\{X_1, \ldots, X_n\}$ denote n i.i.d. samples of the random variable X. If*

$$n \leq \log_{\frac{1}{1-p}}\Big(\frac{d-1}{\ln(10)}\Big),$$

then, with probability at least 0.9, there exists a coordinate $\widehat{j} \in [d]$ such that $\widehat{j} \neq j^*$, and $X_i[\widehat{j}] = 0$ for all $i \in [n]$.

Proof. Let E_j denote the event the coordinate $X_i[j] = 0$ for all $i \in [n]$. We note that for any $j \in [d]$,

$$\Pr(E_j) = (1-p)^n,$$

Further, let E denote the event that there exists a coordinate $\widehat{j} \in [d] \setminus \{j^*\}$ such that $X_i[\widehat{j}] = 0$ for all $i \in [n]$. Thus,

$$\Pr(E^c) = \Pr\Big(\bigcap_{j \in [d] \setminus \{j^*\}} E_j^c\Big) \overset{(i)}{=} \prod_{j \in [d] \setminus \{j^*\}} \Pr(E_j^c)$$

where the equality in (i) follows from the fact that the events $\{E_j\}$ are mutually independent to each other. Plugging in the bound for $\Pr(E_j^c)$, we get

$$\Pr(E^c) = (1-(1-p)^n)^{d-1}.$$

Using the fact that $1 - a \leq e^{-a}$ for $a \geq 0$, we get

$$\Pr(E^c) \leq e^{-(1-p)^n(d-1)} \leq 0.1,$$

where the second inequality above holds for $n \leq \log_{\frac{1}{1-p}}\Big(\frac{d-1}{\ln(10)}\Big)$. $\square$

Lemma 12 (Proposition 7.3.2, Matoušek and Vondrák (2001)). *For n even, let $X_1, \ldots, X_n$ be independent samples from $\mathcal{B}(1/2)$. Then, for any $t \in [0, n/8]$,*

$$\Pr\Big(\sum_{i=1}^{n} X_1 \geq \frac{n}{2} + t\Big) \geq \frac{1}{15} e^{-16t^2/n}.$$

Lemma 13 (Hoeffding's inequality). *Let $X_1, \ldots, X_n$ be independent random variables with values in the interval $[a, b]$, and the expected value $\mathbb{E}[X] = \mu$. Then, for every $t \geq 0$,*

$$\Pr\Big(\big|\frac{1}{n}\sum_{j=1}^{n} X_j - \mu\big| \geq t\Big) \leq 2\exp\Big(-\frac{2t^2 n}{(b-a)^2}\Big).$$

Lemma 14 (Panchenko (2002)). *Let $\mathcal{W}$ denote a finite class of k points $\{w_1, \ldots, w_K\}$, and let $f(w; z)$ denote a loss function that is L-Lipschitz in the variable w for all $z \in \mathcal{Z}$. Further, let $S = \{z_i\}_{i=1}^n$ denote a dataset of n samples, each drawn independently from some distribution $\mathcal{D}$. Define the point $\widehat{w}_S = \operatorname{argmin}_{w \in \mathcal{W}} \sum_{i=1}^n \frac{1}{n} f(w, z_i)$. Then, with probability at least $1 - \delta$ over the sampling of the set S,*

$$F(\widehat{w}_S) \leq F^* + O\Big(\frac{L\log(K/\delta)}{n} + \sqrt{\frac{F^* L \log(K/\delta)}{n}}\Big),$$

where $F(w) := \mathbb{E}_{z \sim \mathcal{D}}[f(w; z)]$ and $F^* := \min_{w \in \mathcal{W}} F(w)$.

4.8.2 Proofs for Section 4.2

Throughout this section, we assume that a data sample z consists of (x, y, α), where $x \in \{0, 1\}^d$, $y \in \{-1, 1\}$ and $\alpha \in \{0, e_1, \ldots, e_d\}$. The loss function $f_{(A)} : \mathbb{R}^d \times \mathcal{Z}$ is given by:

$$f_{(A)}(w; (x, y, \alpha)) = y\|(w - \alpha) \odot x\|. \tag{4.9}$$

We also assume that $d \geq \ln(10)2^n + 1$. Since $f_{(A)}$ is not differentiable when $w = 0$, we define the sub-gradient $\partial f_{(A)}(w) = 0$ at the point $w = 0$. Further, for the rest of the section, whenever clear from the context, we will ignore the subscript (A), and denote the loss function by $f(w; z)$. Additionally we define the following distribution over the samples $z = (x, y, \alpha)$.

Definition 11. *For parameters $\delta \in [0, \frac{1}{2}]$, $p \in [0, 1]$, and $a \in \{0, e_1, \ldots, e_d\}$, define the distribution $\mathcal{D}(\delta, p, a)$ over $z = (x, y, \alpha)$ as follows:*

$$x \sim \mathcal{B}(p)^{\otimes d}, \qquad y = 2r - 1 \quad \textit{for} \quad r \sim \mathcal{B}(\tfrac{1}{2} + \delta), \qquad \alpha = a.$$

The components x, y and α are sampled independently.

Supporting technical results

The following lemma provides some properties of the population loss under $\mathcal{D}(\delta, p, a)$ given in Definition 11.

Lemma 15. *For any $\delta \in [0, \frac{1}{2}]$, $p \in (0, 1]$, and $a \in \{0, e_1, \ldots, e_d\}$, the population loss under $f_{(A)}$ when the data is sampled i.i.d. from $\mathcal{D}(\delta, p, a)$ is convex in the variable w. Furthermore, the population loss has a unique minimizer at $w = a$ with $F(a) = 0$, and any ε-suboptimal minimizer w of the population loss must satisfy $\|w - a\| \leq \varepsilon/2\delta p$.*

Proof. Let F be the population loss. Using the definition of F, we get

$$\begin{aligned} F(w) &= \mathbb{E}_{(x,y,\alpha)\sim\mathcal{D}(\delta,p,a)}[y\|(w - \alpha) \odot x\|] \\ &= \Pr(y = 1)\, \mathbb{E}_x[\|(w - a) \odot x\|] - \Pr(y = -1)\, \mathbb{E}_{x,\alpha}[\|(w - a) \odot x\|] \\ &= (\tfrac{1}{2} + \delta)\, \mathbb{E}_x[\|(w - a) \odot x\|] - (\tfrac{1}{2} - \delta)\, \mathbb{E}_x[\|(w - a) \odot x\|] \end{aligned}$$

$$= 2\delta\, \mathbb{E}_x[\|(w-a)\odot x\|].$$

Since, for any x and a, the function $\|(w-a)\odot x\|$ is a convex function of w, the above formula implies that F is also a convex function of w. Furthermore, F is always non-negative and $F(a)=0$.

Now note that

$$F(w) = 2\delta\, \mathbb{E}_x[\|(w-a)\odot x\|] \geq 2\delta\|(w-a)\odot \mathbb{E}_x[x]\| = 2\delta p\|w-a\|,$$

where the second inequality follows from Jensen's inequality, and the last equality from the fact that $x \sim \mathcal{B}(p)^d$. Now, if w is an ε-suboptimal minimizer of F, then since $F(a)=0$, the above bound implies that $\|w-a\| \leq \varepsilon/2\delta p$. This also implies, in particular using $\varepsilon = a$, that a is a unique minimizer of F. □

The next lemma establishes empirical properties of a dataset S of size n drawn from the distribution $\mathcal{D}(1/10, 1/2, a)$ given in Definition 11.

Lemma 16. *Let $j^* \in [d]$. Let S denote a dataset of size $n \leq \log_2(d/\ln(10))$ sampled i.i.d. from a distribution $\mathcal{D}(\frac{1}{10}, \frac{1}{2}, a)$ for some vector $a \in \{0, e_1, \ldots, e_d\}$. Then, with probability at least 0.9 over the choice of the dataset S, there exists an index $\widehat{j} \in [d]$ such that $\widehat{j} \neq j^*$ and $x[\widehat{j}] = 0$ for all $z \in S$ for which $y = 1$ and $x[\widehat{j}] = 1$ for all $z \in S$ for which $y = -1$.*

Proof. Let S denote a set of n samples drawn i.i.d. from $\mathcal{D}(\frac{1}{10}, \frac{1}{2}, a)$. We define the sets S^+ and S^- as follows:

$$S^+ := \{z_i \in S \mid y_i = +1\},$$
$$S^- := \{z_i \in S \mid y_i = -1\}. \tag{4.10}$$

Let E_j denote the event that the coordinate $x[j] = 0$ for all $z = (x, y) \in S^+$, and $x[j] = 1$ for all $z = (x, y) \in S^-$. Since, for each sample, $x[j]$ is drawn independently from $\mathcal{B}(1/2)$, we have that

$$\Pr(E_j) = \frac{1}{2^n}.$$

Next, let E denote the event that there exists some $\widehat{j} \in [d] \setminus \{j^*\}$ for which $x[\widehat{j}] = 0$ for all $z = (x, y) \in S^+$, and $x[\widehat{j}] = 1$ for all $z = (x, y) \in S^-$. We thus note that,

$$\Pr(E^c) = \Pr\Big(\bigcap_{j \in [d] \setminus \{j^*\}} E_j^c\Big) \overset{(i)}{=} \prod_{j \in [d] \setminus \{j^*\}} \Pr\big(E_j^c\big)$$

where the equality in (i) follows from the fact that the events $\{E_j\}$ are mutually independent to each other. Plugging in the bound for $\Pr(E_j^c)$, we get

$$\Pr(E^c) = \Big(1 - \frac{1}{2^n}\Big)^{d-1}.$$

Using the fact that $1 - a \leq e^{-a}$ for $a \geq 0$, we get

$$\Pr(E^c) \leq e^{-(d-1)/2^n} \leq 0.1,$$

where the second inequality above holds for $n \leq \log_2((d-1)/\ln(10))$. □

Proof of Theorem 13

We now have all the tools required to prove Theorem 13, which states for any regularization function $R(w)$, there exists an instance of a SCO problem for which RERM fails to find $O(1)$-suboptimal solution, in expectation.

Proof of Theorem 13. In this proof, we will assume that $n \geq 300$, $d \geq \log(10)2^n + 1$ and the initial point $w_1 = 0$. Assume, for the sake of contradiction, that there exists a regularizer $R : \mathbb{R}^d \to \mathbb{R}$ such that for any SCO instance

over $\mathbb{R}^d$ satisfying Assumption II with[3] $L, B = 1$ the expected suboptimality gap for RERM is at most $\varepsilon = 1/20000$. Then, by Markov's inequality, with probability at least 0.9 over the choice of sample set S, the suboptimality gap is at most 10ε.

Before delving into the proof, we first define some additional notation based on the regularization function $R(\cdot)$. For $j \in [d]$, define the points w_j^* such that

$$w_j^* \in \operatorname*{argmin}_{w \text{ s.t. } \|w - e_j\| \leq 100\varepsilon} R(w). \tag{4.11}$$

and define the index $j^* \in [d]$ such that $j^* \in \operatorname{argmax}_{j \in [d]} \; R(w_j^*)$.

Now we will construct an instance of SCO in $d = \lceil 2^n \ln(10) + 1 \rceil$ dimensions. The instance will be based on the function $f_{(A)}$ given in (4.9). The data distribution of interest is $\mathcal{D}_1 := \mathcal{D}(\frac{1}{10}, \frac{1}{2}, e_{j^*})$ (see Definition 11) and suppose that the dataset $S = \{z_i\}_{i=1}^n$ is sampled i.i.d. from $\mathcal{D}_1$. The population loss $F(w)$ corresponding to $\mathcal{D}_1$ is given by

$$F(w) = \mathbb{E}_{z \sim \mathcal{D}_1}\left[f_{(A)}(w; z)\right] = 0.2\, \mathbb{E}_x[\|(w - e_{j^*}) \odot x\|].$$

Clearly, $F(w)$ is convex in w and so minimizing it is an instance of SCO. Furthermore, $f_{(A)}$ is 1-Lipschitz, and the initial point $w_1 = 0$ satisfies $\|w_1 - w^*\| \leq 1$. This implies that $f_{(A)}$ satisfies both Assumptions I and II given in (**??**) and (4.2) respectively. Additionally, note that e_{j^*} is the unique minimizer of $F(\cdot)$, and as a consequence of Lemma 15, any 10ε-suboptimal minimizer w' for $F(\cdot)$ must satisfy

$$\|w' - e_{j^*}\| \leq 100\varepsilon. \tag{4.12}$$

Using the dataset S, we define some additional sets as follows:

[3]The specific values $L, B = 1$ are used for convenience; the proof immediately yields the required SCO instances for arbitray values of L and B that are $O(1)$ in magnitude as a function of n.

- Define the set S^+ as the set of all the sample points in S for which $y = +1$, i.e

$$S^+ := \{(x, y, \alpha) \in S \mid y = +1\},$$

and define the set $S^- := S \setminus S^+$.

- Define the set U as the set of all the sample points in S^+ for which $x[j^*] = 1$, i.e.

$$U := \big\{(x, y, \alpha) \in S^+ \mid x[j^*] = 1\big\}.$$

- Similarly, define the set V as the set of all the sample points in S^- for which $x[j^*] = 1$, i.e.

$$V := \big\{(x, y, \alpha) \in S^- \mid x[j^*] = 1\big\}.$$

Next, define the event E such that all of the following hold:

(a) $|S^-| \geq 7n/20$.

(b) $|U| \leq 39n/100$.

(c) $|V| \geq 7n/50$.

(d) There exists $\widehat{j}$ such that $\widehat{j} \neq j^*$ and $x[\widehat{j}] = 0$ for all $z \in S^+$ and $x[\widehat{j}] = 1$ for all $z \in S^-$.

(e) RERM with regularization $R(\cdot)$ and using the dataset S returns an 10ε-suboptimal solution for the test loss $F(w)$.

Using Hoeffding's inequality (Lemma 13) and the fact that $\mathbb{E}[|S^-|] = 2n/5$, $\mathbb{E}[|U|] = 3n/10$, and $\mathbb{E}[|V|] = n/5$, we get that parts (a), (b) and (c) hold simultaneously with probability at least 0.3 for $n \geq 300$. Furthermore, by Lemma 16, part (d) holds with probability at least 0.9 since $d \geq \ln(10)2^n + 1$, and part (e)

holds with probability 0.9 by our assumption. Hence, the event E occurs with probability at least 0.1. In the following, we condition on the occurrence of the event E.

Consider the point $w^*_{\widehat{j}}$ defined in (4.11) corresponding to the coordinate $\widehat{j}$ (that occurs in event E). By definition, we have that $\|w^*_{\widehat{j}} - e_{\widehat{j}}\| \leq 100\varepsilon$. Thus, we have

$$\|w^*_{\widehat{j}} - e_{j^*}\| \geq \|e_{\widehat{j}} - e_{j^*}\| - \|w^*_{\widehat{j}} - e_{\widehat{j}}\| \geq \sqrt{2} - 100\varepsilon > 100\varepsilon.$$

The first line above follows from Triangle inequality, and the second line holds because $\widehat{j} \neq j^*$ and because $\varepsilon = 1/20000$. As a consequence of the above bound and the condition in (4.12), we get that the point $w^*_{\widehat{j}}$ is not an 10ε-suboptimal point for the population loss $F(\cdot)$, and thus would not be the solution of the RERM algorithm (as the RERM solution is 10ε-suboptimal w.r.t $F(\cdot)$). Since, any RERM must satisfy condition (4.12), we have that

$$\begin{aligned}
\widehat{F}(w^*_{\widehat{j}}) + R(w^*_{\widehat{j}}) &> \min_{w:\ \|w - e_{j^*}\| \leq 100\varepsilon} \big(\widehat{F}(w) + R(w)\big) \\
&\geq \min_{w:\ \|w - e_{j^*}\| \leq 100\varepsilon} \widehat{F}(w) + \min_{w:\ \|w - e_{j^*}\| \leq 100\varepsilon} R(w) \\
&\geq -100\varepsilon + R(w^*_{j^*}), \qquad (4.13)
\end{aligned}$$

where $\widehat{F}(w) = \frac{1}{n}\sum_{i=1}^n f(w; z_i)$ denotes the empirical loss on the dataset S, and the inequality in the last line follows from the definition of the point $w^*_{j^*}$ and by observing that $\widehat{F}(w) \geq -100\varepsilon$ for any w for which $\|w - e_{j^*}\| \leq 100\varepsilon$ since $\widehat{F}$ is 1-Lipschitz and $\widehat{F}(e_{j^*}) = 0$. For the left hand side, we note that

$$\begin{aligned}
\widehat{F}(w^*_{\widehat{j}}) &= \frac{1}{n}\sum_{z \in S} y\|(w^*_{\widehat{j}} - e_{j^*}) \odot x\| \\
&\overset{(i)}{\leq} 100\varepsilon + \frac{1}{n}\sum_{z \in S} y\|(e_{\widehat{j}} - e_{j^*}) \odot x\| \\
&\overset{(ii)}{\leq} 100\varepsilon + \frac{1}{n}\Big(\sum_{z \in S^+} \|(e_{\widehat{j}} - e_{j^*}) \odot x\| - \sum_{z \in S^-} \|(e_{\widehat{j}} - e_{j^*}) \odot x\|\Big)
\end{aligned}$$

$$
\begin{aligned}
&\overset{(iii)}{\leq} 100\varepsilon + \frac{1}{n}\Big(\sum_{z\in S^+}|x[j^*]| - \sum_{z\in S^+}\sqrt{1+(x[j^*])^2}\Big)\\
&\overset{(iv)}{\leq} 100\varepsilon + \frac{1}{n}\Big(\sum_{z\in U}1 - \sum_{z\in V}\sqrt{2} - \sum_{z\in S^-\setminus V}1\Big)\\
&= 100\varepsilon + \frac{1}{n}\Big(|U| - (\sqrt{2}-1)|V| - |S^-|\Big)
\end{aligned}
$$

where the inequality (i) is due to the definition of the point $w^*_{\widehat{j}}$, and because $\widehat{F}$ is 1-Lipschitz, the inequality in (ii) follows from the definition of the sets S^+ and S^-, the inequality (iii) holds due to the fact that $x[\widehat{j}] = 0$ for all $(x,\alpha) \in S^+$, and $x[\widehat{j}] = 1$ for all $x \in S^-$, and finally, the inequality (iv) follows from the definition of the sets U and V. Plugging the bounds on $|U|$, $|V|$ and $|S^-|$ from the event E defined above, we get that:

$$
\widehat{F}(w^*_{\widehat{j}}) \leq 100\varepsilon - \frac{3}{200}. \tag{4.14}
$$

Combining the bounds in (4.13) and (4.14) and rearranging the terms, we get that

$$
200\varepsilon \geq \frac{3}{200} + R(w^*_{j^*}) - R(w^*_{\widehat{j}}) \geq \frac{3}{200}.
$$

where the second inequality above holds because $j^* \in \operatorname{argmax}_{j\in[d]} R(w^*_j)$ (by definition). Thus, $\varepsilon \geq 3/40000 > 1/20000$, a contradiction, as desired.[4]

Finally, note that since the function $f_{(A)}$ is $1-$Lipschitz, the initial point $w_1 = 0$ satisfies $\|w_1 - w^*\| = \|w_1 - e_{j^*}\| \leq 1$ and $F(w)$ is convex, due to Theorem 12, SGD run with a step size of $1/\sqrt{n}$ for n steps learns at a rate of $O(1/\sqrt{n})$. □

Proof of Corollary 1

The following proof closely follows along the lines of the proof of Theorem 13 above.

[4]The constant in the lower bound for ε can be improved further via a tighter analysis for the sizes of the sets $|U|, |V|$ and $|S^-|$ in the event E.

Proof. In this proof, we will assume that $n \geq 300$, $d \geq \log(10)2^n + 1$ and the initial point $w_1 = 0$. Assume, for the sake of contradiction, that there exists a regularizer $R : \mathbb{R}^d \to \mathbb{R}$ such that for any SCO instance over $\mathbb{R}^d$ satisfying Assumption II with $L, B = 1$, there exists a regularization parameter λ such that the expected suboptimality gap for the point $w_{\text{RERM}} = \text{argmin}_{w \in \mathcal{W}} F_S(w) + \lambda R(w)$ is at most $\varepsilon = 1/20000$. Then, by Markov's inequality, with probability at least 0.9 over the choice of sample set S, the suboptimality gap is at most 10ε.

We next define the functions $f(w; z)$, the distribution $\mathcal{D}_1$ and the population loss function $F(w)$ identical to the the corresponding quantities in the proof of Theorem 13. Furthermore, we also define the points w_j for $j \in [d]$, the coordinates j^* and the event E identical to the corresponding definitions in the proof of Theorem 13. As we argued in the proof of Theorem 13 above, we note that any 10ε-suboptimal minimizer w' for $F(\cdot)$ must satisfy

$$\|w' - e_{j^*}\| \leq 100\varepsilon. \tag{4.15}$$

Thus, the point $w^*_{\widehat{j}}$ (where $\widehat{j}$ is defined in the event E) is not an 10ε-suboptimal point for the population loss $F(\cdot)$, and thus for any regularization parameter λ (that can even depend on the dataset S) should not correspond to the RERM solution (as the point w_{RERM} is 10ε-suboptimal with respect to $F(\cdot)$). Since, any RERM must satisfy condition (4.15), we have that for any regularization parameter λ that can even depend on the dataset S,

$$\begin{aligned}
\widehat{F}(w^*_{\widehat{j}}) + \lambda R(w^*_{\widehat{j}}) &> \min_{w:\ \|w - e_{j^*}\| \leq 100\varepsilon} \left(\widehat{F}(w) + \lambda R(w)\right) \\
&\geq \min_{w:\ \|w - e_{j^*}\| \leq 100\varepsilon} \widehat{F}(w) + \min_{w:\ \|w - e_{j^*}\| \leq 100\varepsilon} \lambda R(w) \\
&\geq -100\varepsilon + \lambda R(w^*_{j^*}),
\end{aligned} \tag{4.16}$$

where the inequality in the last line follows from the definition of the point $w^*_{j^*}$ and by observing that $\widehat{F}(w) \geq -100\varepsilon$ for any w for which $\|w - e_{j^*}\| \leq 100\varepsilon$ since $\widehat{F}$ is 1-Lipschitz and $\widehat{F}(e_{j^*}) = 0$. For the left hand side, similar to the proof of Theorem 13, we upper bound

$$\widehat{F}(w^*_{\widehat{j}}) \leq 100\varepsilon - \frac{3}{200}. \tag{4.17}$$

Combining the bounds in (4.16) and (4.17) and rearranging the terms, we get that

$$200\varepsilon \geq \frac{3}{200} + \lambda R(w^*_{j^*}) - \lambda R(w^*_{\widehat{j}}) \geq \frac{3}{200}.$$

where the second inequality above holds because $j^* \in \operatorname{argmax}_{j\in[d]} R(w^*_j)$ (by definition). Thus, $\varepsilon \geq 3/40000 > 1/20000$, a contradiction, as desired.

We remark that in the above proof the regularization parameter λ can be arbitrary and can even depend on the dataset S, but λ should not depend on w as this will change the definition of the points w^*_j. Only the regularization function $R(\cdot)$ is allowed to depend on w. □

4.8.3 Proofs for Section 4.3

In this section, we first provide a learning problem for which, for any $\eta \in [1/n^2, 1)$ and $T \in [1, n^3)$, the point $\widehat{w}^{\mathrm{GD}}_{\eta,T}$ returned by running GD algorithm with step size η for T time steps has the lower bound

$$\mathbb{E}[F(\widehat{w}^{\mathrm{GD}}_{\eta,T})] - \inf_{w\in\mathbb{R}^d} F(w) = \Omega\Big(\frac{1}{\log^4(n)} \min\Big\{\eta\sqrt{T} + \frac{1}{\eta T} + \frac{\eta T}{n}, 1\Big\}\Big). \tag{4.18}$$

Then, we will provide a learning setting in which GD algorithm when run with step size $\eta \leq 1/64n^{5/4}$ has the lower bound of $\Omega(1/n^{3/8})$ for all $T \geq 0$. Our final

lower bound for GD algorithm, given in Theorem 14 then follows by considering the above two lower bound constructions together.

Modification of Amir et al. (2021) lower bound

Amir et al. (2021) recently provided the following lower bound on the performance of GD algorithm.

Theorem 19 (Modification of Theorem 3.1, Amir et al. (2021))**.** *Fix any n, $\bar{\eta}$ and $\bar{T}$. There exists a function $f(w;z)$ that is 4-Lipschitz and convex in w, and a distribution $\mathcal{D}$ over the instance space $\mathcal{Z}$, such that for any $\eta \in [\bar{\eta}, \bar{\eta}\sqrt{3/2})$ and $T \in [\bar{T}, 2\bar{T})$, the point $\widehat{w}^{GD}[\eta, T]$ returned by running GD algorithm with a step size of η for T steps has excess risk*

$$\mathbb{E}[F(\widehat{w}^{GD}[\eta, T])] - \inf_{w \in \mathbb{R}^d} F(w) \geq \Omega\Big(\min\Big\{\eta\sqrt{T} + \frac{1}{\eta T}, 1\Big\}\Big), \tag{4.19}$$

where $F(w) := \mathbb{E}_{z\sim\mathcal{D}}[f(w;z)]$. Additionally, there exists a point $w^* \in \operatorname{argmin}_w F(w)$ such that $\|w^*\| \leq 1$.

Proof. We refer the reader to Amir et al. (2021) for full details about the loss function construction and the lower bound proof, and discuss the modifications below:

- Amir et al. (2021) provide the lower bound for a fixed η and T. In particular, their loss function construction given in eqn-(16) (in their paper) consists of parameters γ_1, γ_2, γ_3, $\varepsilon_1, \ldots, \varepsilon_3$ and d which are chosen depending η and T. However, a slight modification of these parameters easily extends the lower bound to hold for all $\eta \in [\bar{\eta}, \bar{\eta}\sqrt{3/2})$ and $T \in [\bar{T}, 2\bar{T})$. The modified parameter values are:

- Set $d = \frac{2^n}{3\bar{\eta}^2}$.
- Set γ_1 such that $\gamma_1(1 + 5\bar{\eta}\bar{T})\sqrt{d} \leq \frac{1}{64}\min\{\bar{\eta}\sqrt{\bar{T}}, \frac{1}{3}\}$.
- Set $\gamma_2 = 2\gamma_1\bar{\eta}\bar{T}$ and $\gamma_3 = 1$.
- Set $0 < \varepsilon_1 < \cdots < \varepsilon_d < \frac{\gamma_1\bar{\eta}}{2n}$.

Their proof of the lower bound in Theorem 3.1 follows using Lemma 4.1, Theorem 6.1, Lemma 6.2 and Claim 6.3 (in their paper respectively). We note that the above parameter setting satisfies the premise of Lemma 4.1 and Claim 6.3 for all $\eta \in [\bar{\eta}, \bar{\eta}\sqrt{3/2})$ and $T \in [\bar{T}, 2\bar{T})$. Furthermore, it can be easily verified that the proofs of Theorem 6.1 and Lemma 6.2 also follow through with the above parameter setting for all $\eta \in [\bar{\eta}, \bar{\eta}\sqrt{3/2})$ and $T \in [\bar{T}, 2\bar{T})$. Thus, the desired lower bound holds for all $\eta \in [\bar{\eta}, \bar{\eta}\sqrt{3/2})$ and $T \in [\bar{T}, 2\bar{T})$.

- Amir et al. (2021) consider GD with projection on the unit ball as their training algorithm. However, their lower bound also holds for GD without the projection step (as we consider in our paper; see (5.1)). In fact, as pointed out in the proof of Lemma 4.1 (used to Prove Theorem 3.1) in their paper, the iterates w_t generated by the GD algorithm never leave the unit ball. Thus, the projection step is never invoked, and GD with projection and GD without projection produce identical iterates.

The upper bound on $\|w^*\|$ also follows from the provided proof in Amir et al. (2021). As they show in Lemma 4.1, all the GD iterates as well as the minimizer point w^* lie a ball of unit radius.

Finally, note that the loss function in Theorem 19 is 4-Lipschitz, and bounded over the unit ball which contains all the iterates generated by GD algorithm. Thus, a simple application of the Markov's inequality suggests that the lower bound in

(4.19) also holds with constant probability. However, for our purposes, the in-expectation result suffices. □

The loss function construction in Theorem 19 depends on $\bar{\eta}$ and $\bar{T}$, and thus the lower bound above only holds when the GD algorithm is run with step size $\eta \in [\bar{\eta}, \bar{\eta}\sqrt{3/2})$ and for $T \in [\bar{T}, 2\bar{T})$. In the following, we combine together multiple such lower bound instances to get an anytime and any stepsize guarantee.

Theorem 20. *Fix any $n \geq 200$. There exists a function $f(w; z)$ that is 1-Lipschitz and convex in w, and a distribution $\mathcal{D}$ over $\mathcal{Z}$ such that, for any $\eta' \in [1/n^2, 1)$ and $T' \in [1, n^3)$, the point $\widehat{w}^{GD}[\eta', T']$ returned by running GD algorithm with a step size of η' for T' steps satisfies the lower bound*

$$\mathbb{E}[F(\widehat{w}^{GD}[\eta', T'])] - \inf_{w \in \mathbb{R}^d} F(w) \geq \Omega\left(\frac{1}{\log^4(n)} \min\left\{\eta'\sqrt{T'} + \frac{1}{\eta' T'}, 1\right\}\right), \tag{4.20}$$

where $F(w) := \mathbb{E}_{z \sim \mathcal{D}}[f(w; z)]$. Additionally, there exists a minimizer $w^* \in \operatorname{argmin}_w F(w)$ such that $\|w^*\| = O(1)$.

Proof. Set $\gamma := \sqrt{3/2}$. We consider a discretization of the intervals $[1/n^3, 1)$ for the step sizes (we take a slightly larger interval that the domain $[1/n^2, 1)$ of the step size) and $[1, n^3)$ for the time steps respectively. Define the set

$$\mathcal{N} := \left\{\frac{1}{n^3}, \frac{\gamma}{n^3}, \frac{\gamma^2}{n^3}, \cdots, \frac{\gamma^{\lceil 3\log(n)/\log(\gamma)\rceil}}{n^3}\right\}$$

of step sizes such that for any $\eta' \in [1/n^3, 1)$, there exists an $\eta \in \mathcal{N}$ that satisfies $\eta \leq \eta' < \gamma\eta$. Similarly, define the set

$$\mathcal{T} := \left\{1, 2, 4, \ldots, 2^{\lceil 3\log(n)\rceil}\right\}$$

of time steps such that for any $T' \in [1, n^3)$, there exists a $T \in \mathcal{T}$ that satisfies $T \leq T' < 2T$. Further, define $M = |\mathcal{N}||\mathcal{T}|$. Clearly, $M = \lceil 3\log(n)/\log(\gamma)\rceil \cdot \lceil 3\log(n)\rceil$ and for $n \geq 20$ satisfies the bound $40\log^2(n) \leq M \leq 80\log^2(n)$.

In the following, we first define the component function $f_{\eta,T}$ for every $\eta \in \mathcal{N}$ and $T \in \mathcal{T}$. We then define the loss function f and show that it is convex and Lipschitz in the corresponding optimization variable. Finally, we show the lower bound for GD for this loss function f for any step size $\eta \in [1/n^2, 1)$ and time steps $T \in [1, n^3)$.

Component functions. For any $\eta \in \mathcal{N}$ and $T \in \mathcal{T}$, let $\bar{w}_{\eta,T}$, $z_{\eta,T}$, $f_{\eta,T}$ and $\mathcal{D}_{\eta,T}$ denote the optimization variable, data instance, loss function and the corresponding data distribution in the lower bound construction in Theorem 19 where $\bar{\eta}$ and $\bar{T}$ are set as η and T respectively. We note that:

(a) For any $z_{\eta,T}$, the function $f_{\eta,T}(\bar{w}_{\eta,T}; z_{\eta,T})$ is 4-Lipschitz and convex in $\bar{w}_{\eta,T}$.

(b) For any $\eta'' \in [\eta, \gamma\eta)$ and $T'' \in [T, 2T)$, the output point[5] $\widehat{w}^{\mathrm{GD}}_{\eta,T}[\eta'', T'']$ returned by running GD algorithm with a step size of η'' for T'' steps has excess risk

$$\mathbb{E}\big[F_{\eta,T}\big(\widehat{w}^{\mathrm{GD}}_{\eta,T}[\eta'', T'']\big)\big] - \inf_{\bar{w}_{\eta,T}} F_{\eta,T}(\bar{w}_{\eta,T}) \geq \Omega\Big(\min\Big\{\eta''\sqrt{T''} + \frac{1}{\eta''T''}, 1\Big\}\Big), \tag{4.21}$$

where the population loss $F_{\eta,T}(\bar{w}_{\eta,T}) := \mathbb{E}_{z_{\eta,T}\sim\mathcal{D}_{\eta,T}}[f_{\eta,T}(\bar{w}_{\eta,T}; z_{\eta,T})]$.

(c) There exists a point $\bar{w}^*_{\eta,T} \in \operatorname{argmin} F_{\eta,T}(\bar{w}_{\eta,T})$ such that $\|\bar{w}^*_{\eta,T}\| \leq 1$.

Lower bound construction. We now present our lower bound construction:

- *Optimization variable*: For any η and T, define $w_{\eta,T} := \bar{w}_{\eta,T}/\log(n)$. The optimization variable w is defined as the concatenation of the variables $(w_{\eta,T})_{\eta\in\mathcal{N},T\in\mathcal{T}}$.

[5] We use the notation $\widehat{w}^{\mathrm{GD}}_{\eta,T}[\eta'', T'']$ to denote the value of the variable $\bar{w}_{\eta,T}$ computed by running GD algorithm with the step size η'' for T'' time steps. The subscripts η, T are used to denote the fact that the corresponding variables are associated with the loss function construction in Theorem 19 where $\bar{\eta}$ and $\bar{T}$ are set as η and T respectively.

- *Data instance*: z is defined as the concatenation of the data instances $(z_{\eta,T})_{\eta\in\mathcal{N},T\in\mathcal{T}}$.
- *Data distribution*: $\mathcal{D}$ is defined as the cross product of the distributions $(\mathcal{D}_{\eta,T})_{\eta\in\mathcal{N},T\in\mathcal{T}}$. Thus, for any $\eta \in \mathcal{N}$ and $T \in \mathcal{T}$, the component $z_{\eta,T}$ is sampled independent from $\mathcal{D}_{\eta,T}$.
- *Loss function*: is defined as

$$f(w;z) = \frac{1}{M}\sum_{\eta\in\mathcal{N},T\in\mathcal{T}} f_{\eta,T}(\bar{w}_{\eta,T};z_{\eta,T}), \tag{4.22}$$

where recall that $\bar{w}_{\eta,T} = w_{\eta,T}\log(n)$. Additionally, we define the population loss $F(w) := \mathbb{E}_{z\sim\mathcal{D}}[f(w;z)]$.

f is convex and 1-Lipschitz. Since, for any $\eta \in \mathcal{N}$ and $T \in \mathcal{T}$, the function $f_{\eta,T}(\bar{w}_{\eta,T};z_{\eta,T})$ is convex in $\bar{w}_{\eta,T}$ for every $z_{\eta,T}$, and since $w_{\eta,T} = \bar{w}_{\eta,T}/\log(n)$, we immediately get that the function $f(w;z)$ is also convex in w for every z. Furthermore, for any w, w' and z, we have

$$\begin{aligned}
|f(w;z) - f(w';z)| &\overset{(i)}{\leq} \frac{1}{M}\sum_{\eta\in\mathcal{N},T\in\mathcal{T}} \left|f_{\eta,T}(\bar{w}_{\eta,T};z_{\eta,T}) - f_{\eta,T}(\bar{w}'_{\eta,T};z_{\eta,T})\right| \\
&\overset{(ii)}{\leq} \frac{4\log(n)}{M}\sum_{\eta\in\mathcal{N},T\in\mathcal{T}} \|w_{\eta,T} - w'_{\eta,T}\| \\
&= \frac{4\log(n)}{M}\sum_{\eta\in\mathcal{N},T\in\mathcal{T}} \sqrt{\|w_{\eta,T} - w'_{\eta,T}\|^2} \\
&\overset{(iii)}{\leq} 4\log(n)\sqrt{\frac{1}{M}\sum_{\eta\in\mathcal{N},T\in\mathcal{T}} \|w_{\eta,T} - w'_{\eta,T}\|^2} \\
&= \frac{4\log(n)}{\sqrt{M}}\sqrt{\sum_{\eta\in\mathcal{N},T\in\mathcal{T}} \|w_{\eta,T} - w'_{\eta,T}\|^2} \\
&= \frac{4\log(n)}{\sqrt{M}}\sqrt{\sum_{\eta\in\mathcal{N},T\in\mathcal{T}} \|w_{\eta,T} - w'_{\eta,T}\|^2} \\
&\overset{(iv)}{=} \frac{4\log(n)}{\sqrt{M}}\sqrt{\|w - w'\|^2}
\end{aligned}$$

$$\overset{(v)}{\leq} \|w - w'\|,$$

where the inequality (i) follows from Triangle inequality and the inequality (ii) holds because $f_{\eta,T}$ is 4-Lipschitz in the variable $\bar{w}_{\eta,T}$ for every $\eta \in \mathcal{N}$ and $T \in \mathcal{T}$, and by using the fact that $\bar{w}_{\eta,T} = w_{\eta,T}\log(n)$. The inequality (iii) above follows from an application of Jensen's inequality and using the concavity of square root. Furthermore, the equality (iv) holds by the construction of the variable w as concatenation of the variables $(w_{\eta,T})_{\eta\in\mathcal{N},T\in\mathcal{T}}$. Finally, the inequality (v) follows from the fact that $M \geq 16\log^2(n)$ for $n \geq 4$. Thus, the function $f(w;z)$ is 1-Lipschitz in w for every z.

Bound on the minimizer. Since the components $(w_{\eta,T})_{\eta\in\mathcal{N},T\in\mathcal{T}}$ do not interact with each other in the loss function f, any point $w^* \in \operatorname{argmin} F(w)$ satisfies:

$$\|w^*\| = \sqrt{\sum_{\eta\in\mathcal{N},T\in\mathcal{T}} \|w^*_{\eta,T}\|^2} = \frac{1}{\log(n)}\sqrt{\sum_{\eta\in\mathcal{N},T\in\mathcal{T}} \|\bar{w}^*_{\eta,T}\|^2},$$

where $\bar{w}^*_{\eta,T}$ denote the corresponding minimizers of the population loss $F_{\eta,T}$. Due to Theorem 19, we have that for any η and T, there exists a $\bar{w}^*_{\eta,T}$ that satisfies $\|\bar{w}^*_{\eta,T}\| \leq 1$. Plugging these in the above, we get that there exists a w^* for which

$$\|w^*\| \leq \frac{1}{\log(n)}\sqrt{M} \leq 10,$$

where the second inequality follows by using the fact that $M \leq 100\log^2(n)$ for $n \geq 20$.

Lower bound proof. We next provide the desired lower bound for the loss function in (4.22). First, note that when running GD update on the variable w, with a step size of η' and using the loss function $f(w;z)$, each of the component

variables $\bar{w}_{\eta,T}$ are updated as if independently performing GD on the function $f_{\eta,T}$ but with the step size of η'/M.

Now, suppose that we run GD on the loss function f with step size $\eta' \in [1/n^2, 1)$ and for $T' \in [1, n^3)$ steps. For $n \geq 20$, the step size $\widetilde{\eta} := \eta'/M \leq \eta/40\log^2(n)$ with which each component is updated clearly satisfies $\widetilde{\eta} \in [1/n^3, 1]$. Thus, by construction of the sets $\mathcal{N}$ and $\mathcal{T}$, there exists some $\bar{\eta} \in \mathcal{N}$ and $\bar{T} \in \mathcal{T}$ such that $\bar{\eta} \leq \widetilde{\eta}' < \gamma\bar{\eta}$ and $\bar{T} \leq T' < 2\bar{T}$. Thus, due to (4.22), we have that for the component function corresponding to $(\bar{\eta}, \bar{T})$, the point $\widehat{w}^{\mathrm{GD}}_{\bar{\eta},\bar{T}}[\widetilde{\eta}, T']$ returned after running GD with step size $\widetilde{\eta}$ for T' steps satisfies

$$\begin{aligned}\mathbb{E}\big[F_{\bar{\eta},\bar{T}}\big(\widehat{w}^{\mathrm{GD}}_{\bar{\eta},\bar{T}}[\widetilde{\eta}, T']\big)\big] - \inf_{\bar{w}_{\bar{\eta},\bar{T}}} F_{\bar{\eta},\bar{T}}(\bar{w}_{\bar{\eta},\bar{T}}) &\geq \Omega\Big(\min\Big\{\widetilde{\eta}\sqrt{T'} + \frac{1}{\widetilde{\eta}\,T'}, 1\Big\}\Big) \\ &\geq \Omega\Big(\frac{1}{M}\min\Big\{\eta'\sqrt{T'} + \frac{1}{\eta' T'}, 1\Big\}\Big), \qquad (4.23)\end{aligned}$$

where the last line holds for $\widetilde{\eta} = \eta'/M$.

Our desired lower bound follows immediately from (4.23). Let $\widehat{w}^{\mathrm{GD}}[\eta', T']$ be the output of running GD algorithm on the function f with step size η' and for T' steps. We have that

$$\begin{aligned}\mathbb{E}\big[F\big(\widehat{w}^{\mathrm{GD}}[\eta', T']\big)\big] - \min_{w} F(w) &= \frac{1}{M}\sum_{\eta\in\mathcal{N}, T\in\mathcal{T}}\Big(\mathbb{E}\big[F_{\eta,T}\big(\widehat{w}^{\mathrm{GD}}_{\eta,T}[\widetilde{\eta}, T']\big)\big] - \inf_{w_{\eta,T}} F_{\eta,T}(w_{\eta,T})\Big) \\ &\geq \frac{1}{M}\Big(\mathbb{E}\big[F_{\bar{\eta},\bar{T}}\big(\widehat{w}^{\mathrm{GD}}_{\bar{\eta},\bar{T}}[\widetilde{\eta}, T']\big)\big] - \inf_{w_{\bar{\eta},\bar{T}}} F_{\bar{\eta},\bar{T}}(w_{\bar{\eta},\bar{T}})\Big) \\ &= \Omega\Big(\frac{1}{M^2}\min\Big\{\eta'\sqrt{T'} + \frac{1}{\eta' T'}, 1\Big\}\Big),\end{aligned}$$

where the equality in the first line holds because the variables $\{w_{\eta,T}\}$ do not interact with each other, the inequality in the second line follows by ignoring rest of the terms which are all guaranteed to be positive, and finally, the last line follows by plugging in (4.23). Using the fact that $M \geq 40\log^2(n)$ in the above, we get that

for any $\eta' \in [1/n^2, 1)$ and for $T' \in [1, n^3)$, the point $\widehat{w}^{\mathrm{GD}}[\eta', T']$ satisfies

$$\mathbb{E}\big[F(\widehat{w}^{\mathrm{GD}}[\eta', T'])\big] - \min_{w} F(w) = \Omega\Big(\frac{1}{\log^4(n)} \min\Big\{\eta'\sqrt{T'} + \frac{1}{\eta' T'}, 1\Big\}\Big).$$

□

Lower bound of $\eta T/n$

The lower bound in (4.20) already matches the first two terms in our desired lower bound in (4.18). In the following, we provide a function for which GD algorithm has expected suboptimality of $\eta T/n$.

Lemma 17. *Fix any n. Let $w \in \mathbb{R}$ denote the optimization variable and z denote a data sample from the instance space $\mathcal{Z} = \{-1, 1\}$. There exists a 2-Lipschitz function $f(w; z)$ and a distribution $\mathcal{D}$ over $\mathcal{Z}$ such that:*

(a) *The population loss $F(w) := \mathbb{E}_{z\sim\mathcal{D}}[f(w; z)]$ is convex in w. Furthermore, $w^* = 0$ is the unique minimizer of the population loss $F(w)$.*

(b) *For any η and T, the point $\widehat{w}^{GD}[\eta, T]$ returned by running GD with a step size of η for T steps satisfies*

$$\mathbb{E}\big[F(\widehat{w}^{GD}[\eta, T])\big] - \inf_{w\in\mathbb{R}} F(w) \geq \Omega\Big(\frac{\eta T}{n}\Big).$$

Proof. For $z \in \{-1, 1\}$ and $w \in \mathbb{R}$, define the instance loss function f as

$$f(w; z) := \big(\frac{1}{4\sqrt{n}} + z\big)|w|.$$

Define the distribution $\mathcal{D}$ such that $z = +1$ or $z = -1$ with probability $1/2$ each. Clearly, $f(w; z)$ is 2-Lispchitz w.r.t. w for any $z \in \mathcal{Z}$. Furthermore, for any $w \in \mathbb{R}$,

$$F(w) = \mathbb{E}_{z\sim\mathcal{D}}[f(w; z)] = \mathbb{E}_z\Big[\big(\frac{1}{4\sqrt{n}} + z\big)|w|\Big] = \frac{1}{4\sqrt{n}}|w|,$$

where the last equality holds because $\mathbb{E}[z] = 0$. Thus, $F(w)$ is convex in w and $w^* = 0$ is the unique minimizer of the population loss $F(w)$. This proves part-(a).

We now provide a lower bound for GD algorithm. Let $S = \{z_i\}_{i=1}^n$ denote a dataset of size n sampled i.i.d. from $\mathcal{D}$. The update rule for GD algorithm from (5.1) implies that

$$w_{t+1}^{\mathrm{GD}} \leftarrow w_t^{\mathrm{GD}} - \eta \cdot \mathrm{sign}(w_t^{\mathrm{GD}}) \cdot \big(\frac{1}{4\sqrt{n}} + \frac{1}{n}\sum_{i=1}^n z_i\big), \tag{4.24}$$

and finally the returned point is given by $\widehat{w}^{\mathrm{GD}}[\eta, T] = \frac{1}{n}\sum_{t=1}^T w_t^{\mathrm{GD}}$.

For $i \in [n]$, define the random variables $y_i = (1 - z_i)/2$. Note that $y_i \sim \mathcal{B}(1/2)$, and thus Lemma 12 implies that

$$\sum_{i=1}^n y_i \geq \frac{n}{2} + \frac{\sqrt{n}}{4},$$

with probability at least $1/15e$. Rearranging the terms, we get that $\sum_{i=1}^n z_i \leq -\sqrt{n}/2$ with probability at least $1/15e$. Plugging this in (4.24), we have that with probability at least $1/15e$, for all $t \geq 0$,

$$w_{t+1}^{\mathrm{GD}} \geq w_t^{\mathrm{GD}} + \frac{\eta}{4\sqrt{n}}\mathrm{sign}(w_t^{\mathrm{GD}}).$$

Without loss of generality, assume that $w_1 > 0$. In this case, the above update rule implies that

$$w_t \geq w_1 + \frac{t\eta}{4\sqrt{n}}$$

for all $t \geq 0$, which further implies that

$$\widehat{w}^{\mathrm{GD}}[\eta, T] = \frac{1}{T}\sum_{t=1}^T w_t \geq w_1 + \frac{\eta(T-1)}{8\sqrt{n}}.$$

Thus,

$$F(\widehat{w}^{\mathrm{GD}}[\eta, T]) - \inf_w F(w) = F(\widehat{w}^{\mathrm{GD}}[\eta, T]) \geq \frac{w_1}{4\sqrt{n}} + \frac{\eta(T-1)}{32n},$$

giving us the desired lower bound on the performance guarantee of the returned point $\widehat{w}^{\mathrm{GD}}[\eta, T]$. The final in-expectation statement follows by observing that the above holds with probability at least $1/15e$. The proof follows similarly when $w_1 \leq 0$. $\square$

We next prove the lower bound in (4.18) which follows by combining the lower bound construction from Theorem 19 and Lemma 17.

Theorem 21. *Fix any $n \geq 200$. There exists a 3-Lipschitz function $f(w; z)$ and a distribution $\mathcal{D}$ over z, such that:*

(a) *The population loss $F(w) := \mathbb{E}_{z\sim\mathcal{D}}[f(w; z)]$ is convex in w. Furthermore, there exists a $w^* \in \operatorname{argmin}_w F(w)$ such that $\|w^*\| = O(1)$.*

(b) *For any $\eta \in [1/n^2, 1)$ and $T \geq 1$, the point $\widehat{w}^{GD}[\eta, T]$ returned by running GD with a step size of η for T steps has excess risk*

$$\mathbb{E}\big[F(\widehat{w}^{GD}[\eta, T])\big] - \inf_{w\in\mathbb{R}^d} F(w) = \Omega\Big(\frac{1}{\log^4(n)} \min\Big\{\eta\sqrt{T} + \frac{1}{\eta T} + \frac{\eta T}{n}, 1\Big\}\Big). \tag{4.25}$$

Proof. We first define some additional notation. Let $w_{(1)}$, $z_{(1)}$, $f_{(1)}$ and $\mathcal{D}_{(1)}$ denote the optimization variable, the data sample, the instance loss and the distribution over $z_{(1)}$ corresponding to the lower bound construction in Theorem 20. Additionally, let $F_{(1)}(w_{(1)})$ denote the corresponding population loss under the distribution $D_{(1)}$. We note that the function $f_{(1)}$ is 1-Lipschitz in $w_{(1)}$ for any $z_{(1)}$. Furthermore,Theorem 20 implies that $F_{(1)}(w_{(1)})$ is convex in $w_{(1)}$, there exists a minimizer $w^*_{(1)} \in \operatorname{argmin}_{w_{(1)}} F_{(1)}(w_{(1)})$ such that $\|w^*_{(1)}\| = O(1)$, and that for any $\eta \in [1/n^2, 1)$ and $T \in [1, n^3)$, the point $\widehat{w}^{\mathrm{GD}}_{(1)}[\eta, T]$ returned by running GD algorithm with step

size η for T time steps satisfies

$$\mathbb{E}\big[F_{(1)}(\widehat{w}_{(1)}^{\mathrm{GD}}[\eta, T])\big] - \inf_{w_{(1)}} F(w_{(1)}) = \Omega\Big(\frac{1}{\log^4(n)} \min\Big\{\eta\sqrt{T} + \frac{1}{\eta T}, 1\Big\}\Big). \tag{4.26}$$

Similarly, let $w_{(2)}$, $z_{(2)}$, $f_{(2)}$ and $\mathcal{D}_{(2)}$ denote the corresponding quantities for the lower bound construction in Lemma 17, and let $F_{(2)}(w_{(2)})$ denote the corresponding population loss under the distribution $\mathcal{D}_{(2)}$. We note that the function $f_{(2)}$ is 2-Lipschitz in $w_{(2)}$ for any $z_{(2)}$. Furthermore, Lemma 17 implies that $F_{(2)}(w_{(2)})$ is convex in $w_{(2)}$ with $w^* = 0$ being the unique minimizer, and that for any η and T the point $\widehat{w}_{(2)}^{\mathrm{GD}}[\eta, T]$ returned by running GD algorithm with step size η for T time steps satisfies

$$\mathbb{E}\big[F_{(2)}(\widehat{w}_{(2)}^{\mathrm{GD}}[\eta, T])\big] - \inf_{w_{(2)}} F(w_{(2)}) = \Omega\Big(\frac{\eta T}{n}\Big). \tag{4.27}$$

Our desired lower bound follows by combining the lower bound constructions from Theorem 19 and Lemma 17 respectively.

Lower bound construction. Consider the following learning setting:

- *Optimization variable*: w is defined as the concatenation of the variables $(w_{(1)}, w_{(2)})$.
- *Data instance*: z is defined as the concatenation of the data instances $(z_{(1)}, z_{(2)})$.
- *Data distribution*: $\mathcal{D}$ is defined as $\mathcal{D}_{(1)} \times \mathcal{D}_{(2)}$, i.e. $z_{(1)}$ and $z_{(2)}$ are sampled independently from $\mathcal{D}_{(1)}$ and $\mathcal{D}_{(2)}$ respectively.
- *Loss function*: is defined as

$$f(w; z) := f_{(1)}(w_{(1)}; z_{(1)}) + f_{(2)}(w_{(2)}; z_{(2)}),$$

Additionally, define the population loss $F(w) := \mathbb{E}_{z\sim\mathcal{D}}[f(w;z)]$.

Since, $f_{(1)}$ is 1-Lipschitz in $w_{(1)}$ and $f_{(2)}$ is 2-Lipschitz in $w_{(2)}$, we have that the function f defined above is 3-Lipschitz in w. Furthermore, the population loss

$$F(w) = F_{(1)}(w_{(1)}) + F_{(2)}(w_{(2)}),$$

is convex in w as both $F_{(1)}(w_{(1)})$ and $F_{(2)}(w_{(2)})$ are convex functions. Furthermore, since the components $(w_{(1)}, w_{(2)})$ do not interact with each other in the function f, we have that there exists a $w^* \in \operatorname{argmin}_w F(w)$ such that:

$$\|w^*\| \leq \|w^*_{(1)}\| + \|w^*_{(2)}\| = O(1),$$

where $w^*_{(1)}$ denotes a minimizer of $F_{(1)}$ with $\|w^*_{(1)}\| = O(1)$ and $w^*_{(1)} = 0$ denotes the unique minimizer of $F_{(2)}$.

GD lower bound. From the construction of the function f, we note that the variables $w_{(1)}$ and $w_{(2)}$ are updated independent to each other by GD algorithm. Thus, for any $\eta \in [1/n^2, 1)$ and $T \in [1, n^3)$, the point $\widehat{w}^{\mathrm{GD}}[\eta, T]$ returned by running GD algorithm on the function f with step size η for T time steps satisfies

$$\begin{aligned}
\mathbb{E}\big[F\big(\widehat{w}^{\mathrm{GD}}[\eta,T]\big)\big] - \min_w F(w) &= \mathbb{E}\big[F_{(1)}\big(\widehat{w}^{\mathrm{GD}}_{(1)}[\eta,T]\big) + F\big(\widehat{w}^{\mathrm{GD}}_{(2)}[\eta,T]\big)\big] \\
&\qquad - \min_{w_{(1)},w_{(2)}} F_{(1)}(w_{(1)}) + F_{(2)}(w_{(2)}) \\
&= \mathbb{E}\big[F_{(1)}\big(\widehat{w}^{\mathrm{GD}}_{(1)}[\eta,T]\big)\big] - \min_{w_{(1)}} F_{(1)}(w_{(1)}) \\
&\qquad + \mathbb{E}\big[F\big(\widehat{w}^{\mathrm{GD}}_{(2)}[\eta,T]\big)\big] - \min_{w_{(2)}} F(w_{(2)}) \\
&\overset{(i)}{=} \Omega\Big(\frac{1}{\log^4(n)} \min\Big\{\eta\sqrt{T} + \frac{1}{\eta T}, 1\Big\}\Big) + \Omega\Big(\frac{\eta T}{n}\Big) \\
&= \Omega\Big(\frac{1}{\log^4(n)} \min\Big\{\eta\sqrt{T} + \frac{1}{\eta T} + \frac{\eta T}{n}, 1\Big\}\Big),
\end{aligned}$$

where the lower bound in (i) follows from combining the lower bounds in (4.26) and (4.27).

Finally, we note that when $\eta \in [1/n^2, 1)$ and $T \geq n^3$, we have that

$$\begin{aligned}\mathbb{E}\big[F(\widehat{w}^{\mathrm{GD}}[\eta, T])\big] - \min_{w} F(w) &\geq \mathbb{E}\big[F(\widehat{w}^{\mathrm{GD}}_{(2)}[\eta, T])\big] - \min_{(2)} F_{(2)}(w_{(2)}) \\ &= \Omega\Big(\frac{\eta T}{n}\Big) \\ &= \Omega(1),\end{aligned}$$

where the second line follows by using the lower bound in (4.27), and the last line holds for $T > n^3$ because $\eta \geq 1/n^2$. Thus, the desired lower bound holds for all $\eta \in [1/n^2, 1]$ and $T \geq 1$. □

Lower bound for small step size ($\eta < 1/64n^{5/4}$)

In the following, we provide a learning setting for which GD run with step size $\eta < 1/64n^{5/4}$ has lower bound of $\Omega(1/n^{3/8})$.

Lemma 18. *Let $w \in \mathbb{R}$ denote the optimization variable, and z denote a data sample. There exists a function $f(w; z)$ and a distribution $\mathcal{D}$ over z such that:*

(a) The population loss $F(w) := \mathbb{E}_{z\sim\mathcal{D}}[f(w; z)]$ is 1-Lipschitz and convex in w. Furthermore, there exists a point $w^* \in \operatorname{argmin}_w F(w)$ such that $\|w^*\| = 1$.

(b) The variance of the gradient is bounded, i.e. $\mathbb{E}_{z\sim\mathcal{D}}[\|\nabla f(w; z) - \nabla F(w)\|^2] \leq 1$ for any $w \in \mathbb{R}$.

(c) If $\eta < 1/64n^{5/4}$, then for any $T > 0$, the point $\widehat{w}_T^{GD}$ returned by running GD algorithm with step size η for T steps satisfies

$$\mathbb{E}[F(\widehat{w}_T^{GD})] - \min_{w\in\mathbb{R}} F(w) = \Omega\Big(\frac{1}{n^{3/8}}\Big). \tag{4.28}$$

Proof. Before delving into the construction of the function f, we first define some auxiliary functions and notation. Define the kink function $h(w)$ as

$$h(w) := \begin{cases} 0 & \text{if} \quad w < 0 \\ -n^{5/8}w & \text{if} \quad 0 \leq w < \frac{1}{64n^{5/4}} \\ \quad n^{5/8}w - \frac{2}{64n^{5/8}} & \text{if} \quad \frac{1}{64n^{5/4}} \leq w \leq \frac{3}{64n^{5/4}} \\ -n^{5/8}w + \frac{4}{64n^{5/8}} & \text{if} \quad \frac{3}{64n^{5/4}} < w \leq \frac{1}{16n^{5/4}} \\ 0 & \text{if} \quad \frac{1}{16n^{5/4}} \leq w \end{cases}, \tag{4.29}$$

and the corresponding gradients $\nabla h(w)$ as

$$\nabla h(w) := \begin{cases} 0 & \text{if} \quad w < 0 \\ -n^{5/8} & \text{if} \quad 0 \leq w < \frac{1}{64n^{5/4}} \\ n^{5/8} & \text{if} \quad \frac{1}{64n^{5/4}} \leq w \leq \frac{3}{64n^{5/4}} \\ -n^{5/8} & \text{if} \quad \frac{3}{64n^{5/4}} < w \leq \frac{1}{16n^{5/4}} \\ 0 & \text{if} \quad \frac{1}{16n^{5/4}} \leq w \end{cases}. \tag{4.30}$$

Additionally, define the set

$$H := \left\{ \frac{1}{4} + \frac{1}{8n^{5/4}}, \frac{1}{4} + \frac{2}{8n^{5/4}}, \ldots, \frac{3}{4} \right\},$$

where the set H has $4n^{5/4}$ numbers from the interval $[1/4, 3/4]$ spaced at a distance of $1/8n^{5/4}$.

We now present our learning setting:

- *Data sample:* z consists of the tuple (β, y) where $\beta \in H$ and $y \in \{-1, +1\}$.
- *Data Distribution:* $\mathcal{D}$ over the instances $z = (\beta, y)$ is defined such that

$$\beta \sim \text{Uniform}(H) \qquad \text{and} \qquad y \sim \text{Uniform}(\{-1, 1\}), \tag{4.31}$$

where β and y are sampled independent of each other.

- *Loss function:* is defined as

$$f(w; z) := \frac{1}{n^{3/8}} \max\{-w, -1\} + y \cdot h(w + \beta), \tag{4.32}$$

Additionally, define the population loss $F(w) := \mathbb{E}_{z\sim\mathcal{D}}[f(w; z)]$.

We next show the desired statements for this learning setting:

(a) For the distribution $\mathcal{D}$ defined in (4.31), since $\mathbb{E}[y] = 0$ and y is sampled independent of β, we have that the population loss

$$F(w) = \mathbb{E}_{z\sim\mathcal{D}}[f(w; z)] = \frac{1}{n^{3/8}} \max\{-w, -1\}.$$

Clearly, $F(w)$ is 1-Lipschitz and convex is w. Additionally, the point $w^* = 1$ is a minimizer of $F(w)$.

(b) We next bound variance of the stochastic gradient. For any $w \in \mathbb{R}$, we have

$$\begin{aligned}
\mathbb{E}_{z\sim\mathcal{D}}[|\nabla f(w; z) - \nabla F(w)|^2] &= \mathbb{E}_{(\beta,y)}\left[|y\nabla h(w + \beta)|^2\right] \\
&= \mathbb{E}_{\beta}\left[|\nabla h(w + \beta)|^2\right] \\
&= \mathbb{E}_{\beta}\Big[\mathbf{1}\Big\{\beta \in \big[w - \frac{1}{16n^{5/4}}, w\big]\Big\} \cdot n^{5/4}\Big] \\
&= n^{5/4} \Pr\big(\beta \in \big[w - \frac{1}{16n^{5/4}}, w\big]\big)
\end{aligned}$$

where the equality in the first line holds because $y \in \{-1, 1\}$, and the second line follows from the construction of the function h which implies that $|\nabla h(w+\beta)| \leq n^{5/8}$ for any w and β (see (4.30)). Using the fact that $\beta \sim \text{Uniform}(B)$ in the above, we get that

$$\mathbb{E}_{z\sim\mathcal{D}}[|\nabla f(w; z) - \nabla F(w)|^2] \leq 1/4.$$

(*c*) We next show that GD algorithm when run with the step size of $\eta \leq 1/64n^{5/4}$ fails to converge to a good solution.

Define $\beta_{(1)}, \ldots, \beta_{(n)}$ such that $\beta_{(j)}$ denotes the jth smallest item in the set $\{\beta_1, \ldots, \beta_n\}$, and define $y_{(j)}$ as the corresponding y variable for the random variable $\beta_{(j)}$. An application of Lemma 19 implies that with probability at least $1 - 2/n^{1/4}$, there exists a $\widehat{j} \leq \lceil \log(n)/2n^{1/4} \rceil$ such that:

(*i*) $\beta_{(1)} \neq \beta_{(2)} \neq \beta_{(3)} \neq \cdots \neq \beta_{(\widehat{j}+1)}$, and

(*ii*) $y_{(\widehat{j})} = +1$.

In the following, we condition on the occurrence of the above two events. The key idea of the proof is that at the level of the empirical loss, the first $\widehat{j}$ kinks (that arise as a result of the stochastic function h) would be isolated from each other due to event-(*i*). Thus, the norm of the gradient of the empirical loss would be bounded by $2/n^{3/8}$ for all points before $\beta_{\widehat{j}}$. At the same time, since $y_{(\widehat{j})} = +1$ from event-(*ii*), the empirical loss would be flat in a small interval around $\beta_{\widehat{j}}$. As we show in the following, when GD is run on the empirical loss with step size $\eta \leq 1/64n^{5/4}$, some GD iterate will lie in this small flat region, and after that GD will fail to make progress because the gradient is 0; hence outputting a bad solution. On the other hand, GD / SGD run with a large step size e.g. $1/\sqrt{n}$ will easily jump over these kinks and converge to a good solution. We illustrate this intuition in Figure 4.1, and provide the proof below.

Recall that the empirical loss on the dataset S is given by:

$$\widehat{F}(w) = \frac{1}{n^{3/8}} \max\{-w, -1\} + \frac{1}{n} \sum_{j=1}^{n} y_j(h(w + \beta_j))$$

Note that for any $\beta \in H$, the set of w for which $h(w + \beta)$ is non-zeros is given by the interval $[\beta, \beta + 1/16n^{5/4}]$. Furthermore, any two numbers in the set H

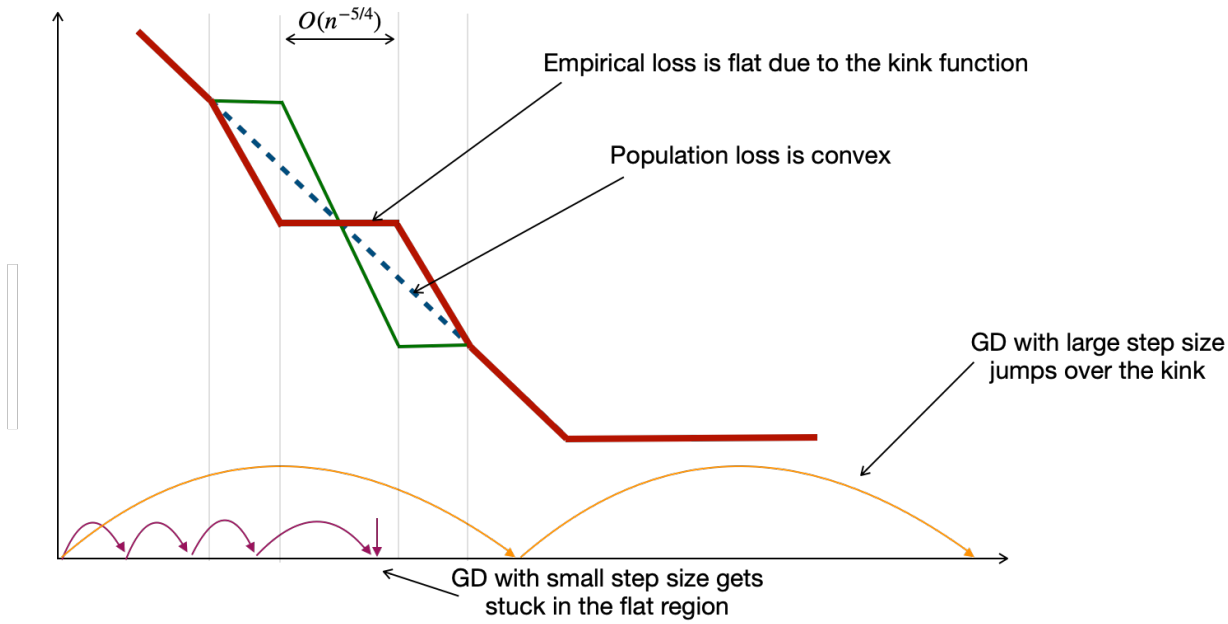

Figure 4.1: (Picture not drawn according to scale) The solid red line shows the empirical loss induced by the kink function when $y = +1$, the solid green line shows the empirical loss when $y = -1$, and the dotted blue line shows the convex population loss. The empirical loss when $y = +1$ has gradient 0 in a region of width $1/32n^{5/4}$. Gradient descent with step size smaller than $1/64n^{5/4}$, shown in the bottom, will get stuck in this flat region and thus fail to find a good solution. On the other hand, gradient descent with large step size will jump over the kink and find a good solution.

are at least $1/8n^{5/4}$ apart from each other. Thus, the event-(i) above implies that non-zero parts of the functions $\{h(w+\beta_{(1)}), \ldots, h(w+\beta_{(\widehat{j})})\}$, i.e. the first $\widehat{j}$ kinks do not overlap with each other. This implies that for $w < \beta_{(\widehat{j}+1)}$,

$$\begin{aligned} |\nabla \widehat{F}(w)| &\leq \frac{1}{n^{3/8}} + \frac{1}{n}\sum_{j=1}^{n} |\nabla h(w+\beta_j)| \\ &\leq \frac{1}{n^{3/8}} + \frac{n^{5/8}}{n} \leq \frac{2}{n^{3/8}}, \end{aligned} \tag{4.33}$$

where the first inequality in the above follows from Triangle inequality and the second inequality holds because at most one of the n terms in the stochastic component $\sum_{j=1}^{n} y_j(h(w+\beta_j))$ above is non-zero for $w < \beta_{(\widehat{j}+1)}$. Thus, $\widehat{F}(w)$ is 1-Lipschitz for $w \in [0, \beta_{(\widehat{j}+1)})$.

Next, the event-(ii) above implies that $y_{(\widehat{j})} = 1$. Define the interval $\widetilde{\mathcal{W}} := (\beta_{(\widehat{j})} + 1/64n^{5/4}, \beta_{(\widehat{j})} + 3/64n^{5/4})$ and note that for any $w \in \widetilde{\mathcal{W}}$,

$$\begin{aligned}\nabla \widehat{F}(w) &= -\frac{1}{n^{3/8}} + \frac{1}{n}\nabla h(w + \beta_{(\widehat{j})}) \\ &= -\frac{1}{n^{3/8}} + \frac{1}{n} \cdot n^{5/8} = 0,\end{aligned} \tag{4.34}$$

where the first equality holds because $y_{(\widehat{j})} = +1$ and using the event-(i) above. This implies that the empirical loss $\widehat{F}(w)$ has 0 gradient for $w \in \widetilde{\mathcal{W}}$, and thus GD algorithm will stop updating if any iterate reaches $\widetilde{\mathcal{W}}$.

In the following, we will show that for $\eta \leq 1/64n^{5/4}$, GD algorithm is bound to get stuck in the interval $\widetilde{\mathcal{W}}$, and will thus fail to find a good solution. Consider the dynamics of the GD algorithm:

$$w_{t+1} \leftarrow w_t - \eta \nabla \widehat{F}(w_t),$$

where the initial point $w_1 = 0$. Suppose there exists some time τ for which $w_\tau > \beta_{(\widehat{j}+1)}$, and let $t_0 > 0$ denote the smallest such time. Thus, for any $t < t_0$ and $\eta \leq 1/64n^{5/4}$, we have that

$$|w_{t+1} - w_t| = \eta |\nabla \widehat{F}(w)| \leq \eta \leq 1/64n^{5/4},$$

where the first inequality holds due to (4.33). This implies that any two consecutive iterates produced by the GD algorithm for $t < t_0$ are at most $1/64n^{5/4}$ apart from each other. However, note that the interval $\widetilde{\mathcal{W}} \subseteq [0, \beta_{(\widehat{j}+1)})$ and has width of $2/64n^{5/4}$. Thus, there exists some time $t' \leq t_0$ for which $w_{t'}$ will lie in the set $\widetilde{\mathcal{W}}$. However, recall that $\nabla F(w) = 0$ for any $w \in \widetilde{\mathcal{W}}$ as shown in (4.34). Thus, once $w_{t'} \in \widetilde{\mathcal{W}}$, GD will not update any further implying that for all $t > t'$, $w_t = w_{t'}$. This shows via contradiction that no such time τ exists for which $w_\tau > \beta_{(\widehat{j}+1)}$.

Hence for $\eta < 1/64n^{5/4}$, all iterates $\{w_t\}_{t\geq 0}$ generated by the GD algorithm will lie in the set $[0, \beta_{(\widehat{j}+1)})$. Thus, for any $T > 1$, the returned point $\widehat{w}_T^{\mathrm{GD}}$ satisfies

$$\widehat{w}_T^{\mathrm{GD}} \leq \beta_{(\widehat{j}+1)} \leq \frac{3}{4},$$

where the second inequality holds because $\beta_{(\widehat{j}+1)} \in H$ and is thus smaller than $3/4$. Thus,

$$F(\widehat{w}_T^{\mathrm{GD}}) - \min_{w\in\mathbb{R}} F(w) \geq \frac{1}{4n^{3/8}}. \tag{4.35}$$

Since, the events (i) and (ii) occur simultaneously with probability at least $1 - 2/n^{1/4}$, we have that for any $T \geq 0$,

$$\mathbb{E}[F(\widehat{w}_T^{\mathrm{GD}})] - \min_{w\in\mathbb{R}} F(w) = \Omega\big(\frac{1}{n^{3/8}}\big).$$

□

Lemma 19. *Suppose $(\beta_1, y_1), \ldots, (\beta_n, y_n)$ be n samples drawn independently from Uniform$(H) \times$ Uniform$(\{-1, 1\})$, where the set $H := \{\frac{1}{4} + \frac{1}{8n^{5/4}}, \frac{1}{4} + \frac{2}{8n^{5/4}}, \ldots, \frac{3}{4}\}$. Further, define $\beta_{(j)}$ to denote the jth smallest number in the set $\{\beta_1, \ldots, \beta_n\}$, and define $y_{(j)}$ as the corresponding y variable for $\beta_{(j)}$. Then, with probability at least $1 - 2/n^{1/4}$, there exists a $\widehat{j} \leq \lceil \log(n)/2n^{1/4} \rceil$ such that:*

(i) $\beta_{(1)} \neq \beta_{(2)} \neq \beta_{(3)} \neq \cdots \neq \beta_{(\widehat{j}+1)}$, *and*

(ii) $y_{(\widehat{j})} = +1$.

Proof. Let $k = \lceil \log(n)/2n^{1/4} \rceil$. We give the proof by translating our problem into a "ball and bins" problem.

Let the set H denote $m = 4n^{5/4}$ distinct bins, and let there be n distinct balls. Each of the n balls are tossed independently into one of the m bins drawn uniformly at random. For any i, j, the event where the ball j is tossed into the bin i corresponds to the event that $\beta_j = \frac{1}{4} + \frac{i}{8n^{5/4}}$. In addition to this, the balls are such that they change color after they are tossed into a bin. In particular, after being tossed into a bin, a ball changes color to either red or blue with equal probability. For any i, j, the event where the ball j takes red color corresponds to the event that $y_j = 1$; Similarly, blue color corresponds to $y = -1$. Thus, in the balls and bins model, the position of the n balls in the bins and their corresponding colors after tossing reveals the value of the random variables $(\beta_1, y_1), \ldots, (\beta_n, y_n)$.

In the following, we first show that with probability at least $1 - \frac{2}{n^{1/4}}$, the first k bins will have at most one ball each, and there will be some bin amongst the first k bins that contains a red color ball. Define E_i to denote the event that the bin i gets more than one ball. Thus,

$$\begin{aligned}
\Pr(E_i) &= 1 - \Pr(\text{Bin } i \text{ has 0 or 1 ball in it}) \\
&= 1 - \Big(1 - \frac{1}{n^{5/4}}\Big)^n - n\Big(1 - \frac{1}{n^{5/4}}\Big)^{n-1} \frac{1}{n^{5/4}} \\
&\leq 1 - \Big(1 - \frac{1}{n^{1/4}}\Big) - \frac{1}{n^{1/4}}\Big(1 - \frac{n-1}{n^{5/4}}\Big) \\
&= \frac{n-1}{n^{3/2}} \leq \frac{1}{\sqrt{n}} \qquad (4.36)
\end{aligned}$$

where the first inequality in the above follows from the fact that $(1-\alpha)^n \leq 1 - \alpha n$ for any $\alpha \geq -1$ and $n \geq 1$. Let A_k denote the event that there exists some bin among the first k bins that has more than one ball. Taking a union bound, we get

$$\Pr(A_k) = \Pr(\cup_{i=1}^{k} E_i) \leq \sum_{i=1}^{k} \Pr(E_i) \leq \frac{k}{\sqrt{n}}.$$

Next, let B_k denote the event that there is no red ball in the first k bins after n tosses. When we throw a ball, the probability that it will fall in the first k bins

is given by $k/n^{5/4}$, and the probability that it takes the color red is $1/2$. Since the bin chosen and the final color are independent of each other for each ball, the probability that a ball falls into the first k bins and is of red color is given by $k/2n^{5/4}$. Furthermore, since the balls are thrown independent to each other, the probability that if we throw n balls, no ball falls into the first k bins that takes the red color is given by

$$\Pr(B_k) = \left(1 - \frac{k}{2n^{5/4}}\right)^n.$$

Finally, let us define C_k to denote the event that there is at most one ball per bin amongst the first k bins, and that there exists a bin amongst the first k bins with a red ball in it. By the definition of the events A_k and B_k, we note that

$$\begin{aligned}
\Pr(C_k) &= \Pr(A_k^c \cap B_k^c) \\
&= 1 - \Pr(A_k \cup B_k) \\
&\geq 1 - \Pr(A_k) - \Pr(B_k) \\
&\geq 1 - \frac{k}{\sqrt{n}} - \left(1 - \frac{k}{2n^{5/4}}\right)^n \\
&\geq 1 - \frac{k}{\sqrt{n}} - e^{-k/2n^{1/4}},
\end{aligned}$$

where the first inequality in the above follows from the union bound, the second inequality holds by plugging in the corresponding bounds for $P(A_k)$ and $P(B_k)$, and the last line is due to the fact that $(1+\alpha)^n \leq e^{\alpha n}$ for any α. Plugging in the value of $k = \lceil \log(n)/2n^{1/4} \rceil$ in the above, we get that

$$\Pr(C_k) \geq 1 - \frac{2}{n^{1/4}}.$$

Thus, with probability at least $1 - 2/n^{1/4}$, the first k bins have at most one ball each, and there exists some bin $\widehat{j} \in [k]$ that contains a red ball; when this happens, the corresponding random variables $(\beta_1, y_1), \ldots, (\beta_n, y_n)$ satisfy:

(a) $\beta_{(1)} \neq \beta_{(2)} \neq \beta_{(3)} \neq \cdots \neq \beta_{(\widehat{j}+1)}$, and

(b) $y_{(\widehat{j})} = +1$.

□

Proof of Theorem 14

In this section, we combine the lower bound constructions in Theorem 21 and Lemma 18 to provide an instance of a SCO problem on which, for any step size η and time steps T, GD has the lower bound of $\Omega(1/n^{5/12})$.

Proof of Theorem 14 . Throughout the proof, we assume that $n \geq 200$ and the initial point $w_1 = 0$.

We first define some additional notation: Let $w_{(1)}$, $z_{(1)}$, $f_{(1)}$ and $\mathcal{D}_{(1)}$ denote the optimization variable, the data sample, the instance loss and the distribution over $z_{(1)}$ corresponding to the lower bound construction in Theorem 21. The statement of Theorem 21 implies that:

(a) $f_{(1)}(w_{(1)}; z_{(1)})$ is 3-Lipschitz in the variable $w_{(1)}$ for any $z_{(1)}$.

(b) The population loss $F_{(1)}(w_{(1)}) := \mathbb{E}_{z_{(1)} \sim \mathcal{D}_{(1)}}[f(w_{(1)}; z_{(1)})]$ is 3-Lipschitz and convex in $w_{(1)}$. Additionally, there exists a point $w^*_{(1)} \in \operatorname{argmin}_{w_{(1)}} F_{(1)}(w_{(1)})$ such that $\|w^*_{(1)}\| = O(1)$.

(c) For any $\eta \in [1/n^2, 1)$ and $T \geq 1$, the point $\widehat{w}^{\mathrm{GD}}_{(1)}[\eta, T]$ returned by running GD

algorithm with a step size of η for T time steps satisfies:

$$\mathbb{E}\big[F_{(1)}\big(\widehat{w}^{\mathrm{GD}}_{(1)}[\eta, T]\big)\big] - \min_{w_{(1)}} F_{(1)}(w_{(1)}) = \Omega\Big(\frac{1}{\log^4(n)} \min\Big\{\eta\sqrt{T} + \frac{1}{\eta T} + \frac{\eta T}{n}, 1\Big\}\Big). \tag{4.37}$$

Similarly, let $w_{(2)}$, $z_{(2)}$, $f_{(2)}$ and $\mathcal{D}_{(2)}$ denote the optimization variable, the data sample, the instance loss and the distribution over $z_{(2)}$ corresponding to the lower bound construction in Lemma 18. The statement of Lemma 18 implies that:

(a) The population loss $F_{(2)}(w_{(2)}) := \mathbb{E}_{z_{(2)}\sim\mathcal{D}_{(2)}}\big[f(w_{(2)}; z_{(2)})\big]$ is 1-Lipschitz and convex in $w_{(2)}$. Additionally, there exists a point $w^*_{(2)} \in \operatorname{argmin}_{w_{(2)}} F(w_{(2)})$ such that $\|w^*_{(2)}\| \leq 1$.

(b) The variance of the gradient is bounded, i.e. for any $w_{(2)}$,

$$\mathbb{E}_{z_{(2)}\sim\mathcal{D}_{(2)}}\big[\|\nabla f_{(2)}(w_{(2)}; z_{(2)}) - \nabla F_{(2)}(w_{(2)})\|^2\big] \leq 1. \tag{4.38}$$

(c) If $\eta < 1/64n^{5/4}$, then for any $T > 0$, the point $\widehat{w}^{\mathrm{GD}}_{(2)}[\eta, T]$ returned by running GD algorithm with step size η for T steps satisfies

$$\mathbb{E}[F_{(2)}\big(\widehat{w}^{\mathrm{GD}}_{(2)}[\eta, T]\big)] - \min_{w_{(2)}} F_{(2)}(w_{(2)}) = \Omega\Big(\frac{1}{n^{3/8}}\Big). \tag{4.39}$$

Lower bound construction. Consider the following learning setting:

- *Optimization variable*: w is defined as the concatenation of the variables $(w_{(1)}, w_{(2)})$.
- *Data instance*: z is defined as the concatenation of the data instances $(z_{(1)}, z_{(2)})$.
- *Data distribution*: $\mathcal{D}$ is defined as $\mathcal{D}_{(1)} \times \mathcal{D}_{(2)}$, i.e. $z_{(1)}$ and $z_{(2)}$ are sampled independently from $\mathcal{D}_{(1)}$ and $\mathcal{D}_{(2)}$ respectively.

- *Loss function*: is defined as

$$f(w; z) := f_{(1)}(w_{(1)}; z_{(1)}) + f_{(2)}(w_{(2)}; z_{(2)}),$$

Additionally, define the population loss $F(w) := \mathbb{E}_{z\sim\mathcal{D}}[f(w; z)] = F_{(1)}(w_{(1)}) + F_{(2)}(w_{(2)})$.

Excess risk guarantee for SGD. We first show that the above learning setting is in SCO. Note that the population loss

$$F(w) = F_{(1)}(w_{(1)}) + F_{(2)}(w_{(2)}).$$

Clearly, $F(w)$ is convex in w since the functions $F_{(1)}(w_{(1)})$ and $F_{(2)}(w_{(2)})$ are convex in $w_{(1)}$ and $w_{(2)}$ respectively. Next, note that for any w and w',

$$\begin{aligned}
|F(w) - F(w')| &\overset{(i)}{\leq} |F_{(1)}(w_{(1)}) - F_{(1)}(w'_{(1)})| + |F_{(2)}(w_{(2)}) - F_{(2)}(w'_{(2)})| \\
&\overset{(ii)}{\leq} 3\|w_{(1)} - w'_{(1)}\| + \|w_{(2)} - w'_{(2)}\| \\
&\leq 3\big(\sqrt{\|w_{(1)} - w'_{(1)}\|^2} + \sqrt{\|w_{(2)} - w'_{(2)}\|^2}\big) \\
&\overset{(iii)}{\leq} 3\sqrt{2} \cdot \sqrt{\|w_{(1)} - w'_{(1)}\|^2 + \|w_{(2)} - w'_{(2)}\|^2} \\
&\overset{(iv)}{=} 3\sqrt{2} \cdot \sqrt{\|w - w'\|^2} \\
&= 3\sqrt{2}\|w - w'\|,
\end{aligned}$$

where the inequality (i) above follows from Triangle inequality and the inequality (ii) is given by the fact that $F_{(1)}$ is 3-Lipschitz in $w_{(1)}$ and that $F_{(2)}$ is 1-Lipschitz in $w_{(2)}$. The inequality in (iii) follows from an application of Jensen's inequality and using concavity of square-root. Finally, the equality in (iv) is by construction of the variable w as concatenation of the variables $(w_{(1)}, w_{(2)})$. Thus, the population loss $F(w)$ is $3\sqrt{2}$-Lipschitz in w.

We next show a bound on the variance of the gradient. Note that for any w,

$$
\begin{aligned}
&\mathbb{E}_{z\sim\mathcal{D}}\big[\|\nabla f(w;z)-\nabla F(w)\|^2\big] \\
&\qquad = \mathbb{E}_{z\sim\mathcal{D}}\big[\|\nabla f_{(1)}(w_{(1)};z_{(1)})+\nabla f_{(2)}(w_{(2)};z_{(2)})-\nabla F_{(1)}(w_{(1)})-\nabla F_{(2)}(w_{(2)})\|^2\big] \\
&\qquad \overset{(i)}{\leq} 2\,\mathbb{E}_{z_{(1)}\sim\mathcal{D}_{(1)}}\big[\|\nabla f_{(1)}(w_{(1)};z_{(1)})-\nabla F_{(1)}(w_{(1)})\|^2\big] \\
&\qquad\qquad\qquad + 2\,\mathbb{E}_{z_{(2)}\sim\mathcal{D}_{(2)}}\big[\|\nabla f_{(2)}(w_{(2)};z_{(2)})-\nabla F_{(2)}(w_{(2)})\|^2\big] \\
&\qquad \overset{(ii)}{\leq} 72 + 2\,\mathbb{E}_{z_{(2)}\sim\mathcal{D}_{(2)}}\big[\|\nabla f_{(2)}(w_{(2)};z_{(2)})-\nabla F_{(2)}(w_{(2)})\|^2\big] \overset{(iii)}{\leq} 74,
\end{aligned}
$$

where the inequality (i) above follows from the fact that $(a+b)^2 \leq 2a^2+2b^2$ for any a, b. The inequality (ii) holds because the function $f_{(1)}(w_{(1)};z_{(1)})$ is 3-Lipchitz in $w_{(1)}$ for any $z_{(1)}$, and because $F_{(1)}(w_{(1)})$ is 3-lipschitz in $w_{(1)}$. Finally, the inequality (iii) is due to the bound in (4.38).

We next show that there exists a $w^* \in \operatorname{argmin}_w F(w)$ such that $\|w^*\| = O(1)$. Since the components $(w_{(1)}, w_{(2)})$ do not interact with each other in the above construction of the loss function f, we note that the point $w^* = (w^*_{(1)}, w^*_{(2)})$ is a minimizer of $F(w) = F_{(1)}(w_{(1)}) + F_{(1)}(w_{(1)})$. This point w^* satisfies

$$\|w^*\| \leq \|w^*_{(1)}\| + \|w^*_{(2)}\| = O(1),$$

where we used the fact that $\|w^*_{(1)}\| = O(1)$ and $\|w^*_{(2)}\| = O(1)$.

Combining the above derived properties, we get that:

(a) The population loss $F(w)$ is $3\sqrt{2}$-Lipschitz and convex in w.

(b) There exists a point $w^* \in \operatorname{argmin}_w F(w)$ such that $\|w^*\| = O(1)$.

(c) For any w, the gradient variance $\mathbb{E}_{z\sim\mathcal{D}}[\|\nabla f(w;z)-\nabla F(w)\|^2] \leq 72$.

Thus, as a consequence of Theorem **??**, we get that running SGD with step size

$\eta = 1/\sqrt{n}$ and initialialization $w_1 = 0$, returns the point $\widehat{w}_n^{\mathrm{SGD}}$ that satisfies

$$\mathbb{E}\big[F(\widehat{w}_n^{\mathrm{SGD}})\big] - \min_w F(w) = O\Big(\frac{1}{\sqrt{n}}\Big). \tag{4.40}$$

Lower bound for GD. We next show that GD algorithm fails to match the performance guarantee of SGD in (4.40), for any step size η and time step T.

Let $\widehat{w}^{\mathrm{GD}}[\eta, T]$ denote the point returned by running GD algorithm on the function f with step size η for T steps. Since the components $w_{(1)}$ and $w_{(2)}$ do not interact with each other in the GD update step due to the construction of the function f, we have that

$$\begin{aligned}\mathbb{E}\big[F(\widehat{w}^{\mathrm{GD}}[\eta, T])\big] - \min_w F(w) = \mathbb{E}[F_{(1)}(\widehat{w}_{(1)}^{\mathrm{GD}}[\eta, T])] - \min_{w_{(1)}} F_{(1)}(w_{(1)}) \\ + \mathbb{E}[F_{(2)}(\widehat{w}_{(2)}^{\mathrm{GD}}[\eta, T])] - \min_{w_{(2)}} F_{(2)}(w_{(2)})\end{aligned} \tag{4.41}$$

The key idea behind the lower bound for GD is that first components has a lower bound of $\Omega(1/n^{5/12})$ when η is larger than $1/64n^{5/4}$. Specifically, in order to improve the excess risk bound over the rate of $1/n^{5/12}$ w.r.t. the variable $w_{(1)}$, we need η to be smaller than $1/64n^{5/4}$. However, any choice of $\eta < 1/64n^{5/4}$ fails to find a good solution w.r.t. the component $w_{(2)}$. We formalize this intuition by considering the two cases (a) $\eta < 1/64n^{5/4}$, and (b) $\eta \geq 1/64n^{5/4}$ separately below.

- **Case 1: $\boldsymbol{\eta < 1/64n^{5/4}}$.** Using the fact that $\mathbb{E}[F_{(1)}(\widehat{w}_{(1)}^{\mathrm{GD}}[\eta, T])] - \min_{w_{(1)}} F_{(1)}(w_{(1)}) \geq 0$ in (4.41), we get that

$$\begin{aligned}\mathbb{E}\big[F(\widehat{w}^{\mathrm{GD}}[\eta, T])\big] - \min_w F(w) &\geq \mathbb{E}\big[F_{(2)}\big(\widehat{w}_{(2)}^{\mathrm{GD}}[\eta, T]\big)\big] - \min_{w_{(2)}} F_{(2)}(w_{(2)}) \\ &= \Omega\Big(\frac{1}{n^{3/8}}\Big),\end{aligned} \tag{4.42}$$

where the inequality in the second line above is due to the lower bound in (4.39) which holds for all $\eta < 1/64n^{5/4}$ and $T \geq 1$.

- **Case 2: $\boldsymbol{\eta \geq 1/64n^{5/4}}$.** Using the fact that $\mathbb{E}[F_{(2)}(\widehat{w}^{\mathrm{GD}}_{(2)}[\eta, T])] - \min_{w_{(2)}} F_{(2)}(w_{(2)}) \geq 0$ in (4.41), we get that

$$\mathbb{E}\big[F(\widehat{w}^{\mathrm{GD}}_{\eta,T})\big] - \min_{w} F(w) \geq \mathbb{E}\big[F_{(1)}\big(\widehat{w}^{\mathrm{GD}}_{(1)}[\eta, T]\big)\big] - \min_{w_{(1)}} F_{(1)}(w_{(1)}). \tag{4.43}$$

The lower bound in (4.37) suggests that for $\eta \in [1/n^2, 1)$ and $T \geq 1$,

$$\begin{aligned}
\mathbb{E}\big[F_{(1)}\big(\widehat{w}^{\mathrm{GD}}_{(1)}[\eta, T]\big)\big] - \min_{w_{(1)}} F_{(1)}(w_{(1)}) &= \Omega\Big(\frac{1}{\log^4(n)} \min\Big\{\eta\sqrt{T} + \frac{1}{\eta T} + \frac{\eta T}{n}, 1\Big\}\Big) \\
&= \Omega\Big(\frac{1}{\log^4(n)} \min\Big\{\eta\sqrt{T} + \frac{1}{2\eta T} + \frac{1}{2\eta T} + \frac{\eta T}{n}, 1\Big\}\Big) \\
&\overset{(i)}{=} \Omega\Big(\frac{1}{\log^4(n)} \min\Big\{\eta\sqrt{T} + \frac{1}{2\eta T} + \frac{1}{\sqrt{2n}}, 1\Big\}\Big) \qquad (4.44) \\
&\overset{(ii)}{=} \Omega\Big(\frac{1}{\log^4(n)} \min\Big\{\eta^{1/3} + \frac{1}{\sqrt{n}}, 1\Big\}\Big)
\end{aligned}$$

where (i) follows from an application of the AM-GM inequality for the last two terms, and (ii) holds by setting $T = 1/\eta^{4/3}$ which minimizes the expression in (4.44). Plugging the above lower bound in (4.43), we get that

$$\mathbb{E}\big[F\big(\widehat{w}^{\mathrm{GD}}[\eta, T]\big)\big] - \min_{w} F(w) \geq \Omega\Big(\frac{1}{\log^4(n)} \min\Big\{\eta^{1/3} + \frac{1}{\sqrt{n}}, 1\Big\}\Big).$$

Finally, using the fact that $\eta \geq 1/64n^{5/4}$ in the above bound, we get

$$\mathbb{E}\big[F\big(\widehat{w}^{\mathrm{GD}}[\eta, T]\big)\big] - \min_{w} F(w) \geq \Omega\Big(\frac{1}{\log^4(n)} \min\Big\{\frac{1}{n^{5/12}} + \frac{1}{\sqrt{n}}, 1\Big\}\Big). \tag{4.45}$$

Combining the lower bound from (4.42) and (4.45) for the two cases above, we get that for all $\eta \geq 0$ and $T \geq 1$, the point $\widehat{w}^{\mathrm{GD}}[\eta, T]$ returned by running GD algorithm on the function f with step size η for T steps satisfies:

$$\mathbb{E}\big[F\big(\widehat{w}^{\mathrm{GD}}[\eta, T]\big)\big] - \min_{w} F(w) \geq \Omega\Big(\frac{1}{\log^4(n)} \min\Big\{\frac{1}{n^{5/12}}, 1\Big\}\Big).$$

□

4.8.4 Proofs for Section 4.8.4

Proof of Proposition 3. Assume that f is bounded by M. Since S_2 is independent of S_1, we note S_2 is also independent of the set of points $\widehat{\mathcal{W}}$. Hoeffding's inequality (Lemma 13) thus implies that, with probability at least $1-\delta$, for all $w \in \widehat{\mathcal{W}}$,

$$|F_{S_2}(w) - F(w)| \leq M\sqrt{\frac{\log(2k/\delta)}{n}}.$$

Thus, the returned point $\widehat{w}^{\mathrm{MP}} \in \operatorname{argmin}_{w\in\widehat{\mathcal{W}}} F_{S_2}(w)$ satisfies:

$$\begin{aligned} F(\widehat{w}^{\mathrm{MP}}) &\leq \min_{w\in\widehat{\mathcal{W}}} F(w) + 2M\sqrt{\frac{\log(2k/\delta)}{n}} \\ &\leq F(\widehat{w}_1) + 2M\sqrt{\frac{\log(2k/\delta)}{n}}. \end{aligned}$$

Observing that the point $\widehat{w}_1$ denotes $\widehat{w}^{\mathrm{SGD}}_{n/2}$, and converting the above high probability statement into an in-expectation result (since f is bounded by M) gives us the desired statement. □

Proof of Theorem 15

For the upper bound of part (b) in Theorem 15, we need the following slight generalization of Theorem 12.

Lemma 20. *Consider any SCO problem and initial point w_1 satisfying Assumption I in (**??**) and Assumption II in (4.2). Suppose starting from the point w_1, we run SGD algorithm with step size η for n steps. Then the average iterate $\widehat{w}^{\mathrm{SGD}}_n := \frac{1}{n}\sum_{i=1}^n w_i$ enjoys the bound*

$$\mathbb{E}_S[F(\widehat{w}^{\mathrm{SGD}}_n)] - \inf_w F(w) \leq \eta(\sigma^2 + L^2) + \frac{1}{2\eta n}\|w_1 - w^*\|^2,$$

for any point $w^* \in \operatorname{argmin}_w F(w)$.

Proof. The proof follows exactly along the lines of the proof of Theorem **??** given on page **??**. □

Theorem 22. *Consider any SCO problem satisfying Assumption I in* (**??**) *and Assumption II in* (4.2)*. Suppose we run the following variant of SGD: for some integer* $k \geq 1$*, we run Algorithm 1 for* nk *steps with the only change being that fresh samples* z_t *are used in each update step (line 5) instead of reusing samples. Then the average iterate* $\widehat{w}_{nk}^{\mathrm{SGD}}$ *enjoys the bound*

$$\mathbb{E}_S[F(\widehat{w}_{nk}^{\mathrm{SGD}})] - \inf_{w:\ \|w-w_1\| \leq B} F(w) \leq 2(B^2 + L^2 + \sigma^2)\sqrt{nk}.$$

Proof. The proof is completely standard, we just include it here for completeness. Let $w^* \in \mathbb{R}^d$ be any point such that $\|w_1 - w^*\| \leq B$. We use $\|w_t - w^*\|^2$ as a potential function. Within epoch j, we have

$$\|w_{t+1} - w^*\|^2 = \|w_t - w^*\|^2 - 2\eta_j \langle \nabla f(w_t; z_t), (w_t - w^*)\rangle + \eta_j^2 \|\nabla f(w_t; z_t)\|^2.$$

Since $\|\nabla f(w_t; z_t)\|^2 \leq 2L^2 + 2\sigma^2$, by rearranging the above, taking expectation over z_t conditioned on w_t, and using convexity of F we have

$$F(w_t) - F(w^*) \leq \frac{\|w_t - w^*\|^2 - \mathbb{E}[\|w_{t+1} - w^*\|^2 | w_t]}{2\eta_j} + \eta_j(L^2 + \sigma^2).$$

Now taking expectation over the randomness in w_t, and summing up the inequality for all iterations in epoch j, we get

$$\sum_{t=n(j-1)+1}^{nj} F(w_t) - F(w^*) \leq \frac{\mathbb{E}[\|w_{n(j-1)+1} - w^*\|^2 - \mathbb{E}[\|w'_{nj+1} - w^*\|^2]}{2\eta_j} + \eta_j(L^2 + \sigma^2)n,$$

where we use the notation w'_{nj+1} to denote the iterate computed by SGD before the $\Pi_{w_1,B}$ projection to generate w_{nj+1}. Summing over all the k epochs, we have

$$\sum_{t=1}^{nk} F(w_t) - F(w^*) \leq \frac{\|w_1 - w^*\|^2}{2\eta_1} + \sum_{j=1}^{k-1} \left(\frac{\mathbb{E}[\|w_{nj+1} - w^*\|^2]}{2\eta_{j+1}} - \frac{\mathbb{E}[\|w'_{nj+1} - w^*\|^2]}{2\eta_j} \right)$$

$$
\begin{aligned}
&- \frac{\mathbb{E}[\|w_{nk+1} - w^*\|^2]}{2\eta_k} + \sum_{j=1}^{k} \eta_j (L^2 + \sigma^2) n \\
&\overset{(i)}{\leq} \frac{\|w_1 - w^*\|^2}{2\eta_1} + \sum_{j=1}^{k-1} \Big(\frac{1}{2\eta_{j+1}} - \frac{1}{2\eta_j} \Big) \mathbb{E}[\|w_{nj+1} - w^*\|^2] \\
&\qquad\qquad + \sum_{j=1}^{k} \eta_j (L^2 + \sigma^2) n \\
&\overset{(ii)}{\leq} \frac{2B^2}{\eta_k} + \sum_{j=1}^{k} \eta_j (L^2 + \sigma^2) n \\
&\overset{(iii)}{\leq} 2(B^2 + L^2 + \sigma^2)\sqrt{nk}.
\end{aligned}
$$

Here, (i) follows since $\|w_{nj+1} - w^*\|^2 \leq \|w'_{nj+1} - w^*\|^2$ since the $\Pi_{w_1,B}$ projection can only reduce the distance to w^*, and (ii) follows since $\|w_{nj+1} - w^*\|^2 \leq 4B^2$ for all $j = 0, 1, \ldots, k-1$, and telescoping, and finally (iii) follows by plugging in $\eta_j = 1/\sqrt{nj}$.

Finally, the stated bound on $F(\widehat{w}_{nk}^{\mathrm{SGD}})$ follows via an application of Jensen's inequality to the convex function F. The dependence on problem specific constants (σ, L and B) in the above bound can be improved further with a different choice of the step size η; getting the optimal dependence on these constants, however, is not the focus of this work. □

We now prove Theorem 15. To begin, we first define the instance space, the loss function, and the data distribution.

Instance space and loss function. We define the instance space $\mathcal{Z} = \{0,1\}^{kd} \times \{\pm 1\}^k \times \{0, e_1, \ldots, e_d\}^k$. That is, each instance $z \in \mathcal{Z}$ can be written as a 3-tuple $z = (x, y, \alpha)$ where $x \in \{0,1\}^{kd}$, $y \in \{\pm 1\}^k$, and $\alpha \in \{0, e_1, \ldots, e_d\}^k$. For each $s \in [k]$, we define x_s, y_s, α_s to be the s-th parts of x, y, α respectively when these

vectors are split into k contiguous equal sized blocks of sizes $d, 1, 1$ respectively. Define the function $f_{(C)} : \mathbb{R}^{d+n+2} \times \mathcal{Z} \to \mathbb{R}$ on the variables $u \in \mathbb{R}, v \in \mathbb{R}^{n+1}, \tau \in \mathbb{R}^d$ and instance $z = (x, y, \alpha) \in \mathcal{Z}$ as follows. First, define the intervals $I_1 = (-\infty, \frac{1}{k}]$, $I_s = (\frac{(s-1)}{k}, \frac{s}{k}]$ for $s = 2, 3, \ldots, k-1$, and $I_k = (\frac{(k-1)}{k}, \infty)$. Then define

$$f_{(C)}((u, v, \tau); z) := f_N(v) + \sum_{s=1}^{k} \mathbf{1}[u \in I_s] f_{(A)}(\tau; (x_s, y_s, \alpha_s)) - \frac{2}{\sqrt{kn}} \min\{u, 1\} + c_1, \tag{C}$$

where the function $f_N : \mathbb{R}^{n+1} \to \mathbb{R}$ is defined as

$$f_N(v) := \left(\frac{\sqrt{n+1}}{1+\sqrt{n+1}}\right) \max_{i \in [n+1]} v_i + \left(\frac{1}{2+2\sqrt{n+1}}\right) \|v\|^2,$$

and the constant $c_1 = \frac{2}{\sqrt{kn}} + \frac{1}{2+2\sqrt{n+1}}$. Finally, we define the variable w to denote the tuple (u, v, τ). We also assume that $n \geq 300$ and $d \geq \log(10)2^n + 1$.

For the purpose of defining the SGD update on the function $f_{(C)}(\cdot; z)$ for any given $z \in \mathcal{Z}$, we make the following convention for defining subgradients: when $u \in I_s$ for some $s \in [k]$, we use a subgradient of

$$f_N(v) + f_{(A)}(\tau; (x_s, y_s, \alpha_s)) - \frac{2}{\sqrt{kn}} \min\{u, 1\}.$$

It is easy to check that with the above convention, the norm of the subgradient is always $O(1)$.

Input distribution. The samples $z \in \mathcal{Z}$ are drawn by sampling $\langle (x_s, y_s, \alpha_s) \rangle_{s=1}^k \sim \mathcal{D}(\frac{1}{10}, \frac{1}{2}, e_{j^*})^{\otimes k}$, for some $j^* \in [d]$ that will be defined in the proof (see Definition 11 for the definition of $\mathcal{D}$).

Proof of Theorem 15. Let $\mathcal{D}'$ denote the distribution specified over the instance space $\mathcal{Z}$. The exact choice of j^* will be specified later in this proof. Note that due

to the indicators in (C), the population loss under $f_{(C)}$ when the data are sampled from $\mathcal{D}'$ can be written as

$$F(w) = \mathbb{E}_{z\sim\mathcal{D}'}[f_{(C)}((u,v,\tau);z')] = f_N(v) + \mathbb{E}_{z\sim\mathcal{D}'}[f_{(A)}(\tau;z)] - \tfrac{2}{\sqrt{kn}}\min\{u,1\}. \quad (4.46)$$

Note that by Lemma 15, $\mathbb{E}_{z\sim\mathcal{D}'}[f_{(A)}(\tau;z)]$ is a convex function of τ. Hence, F is convex, 1-Lispchitz and $\tau = e_{j^*}$ denotes its unique minimizer. Also note that F nicely separates out as convex functions of u, v, τ and hence it is minimized by minimizing the component functions separately. In particular, it is easy to check by computing the subgradient that the optima are

$$u = 1, \qquad v = -\tfrac{1}{\sqrt{n+1}}\mathbf{1}, \qquad w = e_{j^*},$$

where $\mathbf{1}$ is the all 1's vector. The corresponding optimal values are $-\frac{2}{\sqrt{kn}}$, $-\frac{1}{2+2\sqrt{n+1}}$, and 0. This implies that $F^* = \min_w F(w) = 0$. More importantly, the suboptimality gap also decomposes as the sum of suboptimality gaps for the three functions, a fact we will use repeatedly in our analysis.

Finally, we will assume that the initial value of the variables u, v, τ is 0.

Proof of part-(a). Since $\|\nabla f(u,v,\tau;z)\| \le O(1)$ for any $z \in \mathcal{Z}$ and u, v, τ, and the optimal values of u, v, τ are $O(1)$ in magnitude, and $F(\omega)$ is convex in $\omega = (u, v, \tau)$, Theorem 12 implies that single pass SGD run for n steps with a step size of $\frac{1}{\sqrt{n}}$ will obtain $O(\frac{1}{\sqrt{n}})$ suboptimality gap in expectation.

As for the lower bound, note that the function f_N is exactly the same one constructed in (Nesterov, 2014, Section 3.2.1). There, it is shown (in Theorem 3.2.1) that a certain class of gradient based methods (including GD/SGD) have suboptimality at least $\Omega(1/\sqrt{n})$ after n iterations, which completes the proof of part-(a) of Theorem 15.

Proof of part-(b). In the following, we give convergence guarantee for multi-pass SGD algorithm that does k passes over the dataset S_1 of $n/2$ samples (see Algorithm 1). First, note that the deterministic components of the function $f_{(\mathrm{C})}$, viz. f_N and $-\frac{2}{\sqrt{kn}}\min\{u,1\}$, are unaffected by the randomized component in the iterates produced by SGD update. Since these deterministic components are 1-Lipschitz, their optimal values are $O(1)$ in magnitude and the corresponding population losses are convex, we conclude via Theorem 22 that the multi-pass SGD, which is equivalent to GD, attains a suboptimality gap of $O(\frac{1}{\sqrt{kn}})$ on these components. Specifically, the points $\widehat{u}_k$ and $\widehat{v}_k$ returned after the k-th pass satisfy

$$f_N(\widehat{v}_k) - \tfrac{2}{\sqrt{kn}}\min\{\widehat{u}_k,1\} - \min_{v,u}\Big(f_N(v) - \tfrac{2}{\sqrt{kn}}\min\{u,1\}\Big) \le O(\frac{1}{\sqrt{nk}}).$$

Coming to the randomized component of $f_{(\mathrm{C})}$, we note that as long as $u<1$, the gradient of $f_{(\mathrm{C})}$ with respect to u is always $-2/\sqrt{kn}$. Thus, u keeps monotonically increasing at each step of SGD with an increment equal to the step size times $2/\sqrt{kn}$. Suppose we run k pass SGD with step size set to $1/\sqrt{kn}$ and u starting at 0, where in each pass we take $n/2$ steps of SGD using the dataset S_1. It is easy to see that for all $s\in[k]$, the value of u stays in I_s in the s-th pass, and traverses to the next interval I_{s+1} as soon as the $(s+1)$-th pass starts. Thus, within each pass $s\in[k]$ and for all $i\in[n]$, multi-pass SGD encounters a fresh i.i.d. sample $(x_{i,s},y_{i,s},\alpha_{i,s})\sim\mathcal{D}$ for every update. This is thus equivalent to running SGD with $kn/2$ such i.i.d. samples over the first $kn/2$ iterations. An application of Theorem 22 (where we set n to be $n/2$) implies that the suboptimality gap of the iterate $\widehat{\tau}_k$ generated after the kth-pass of SGD algorithm on the randomized component of $f_{(\mathrm{C})}$ is

$$\mathbb{E}_{z\sim\mathcal{D}}[f_{(A)}(\widehat{\tau}_k;z)] - \min_w \mathbb{E}_{z\sim\mathcal{D}}[f_{(A)}(w;z)] \le O\Big(\frac{1}{\sqrt{nk}}\Big).$$

Taking the above two bounds together, we get that the point $\widehat{w}_k = (\widehat{u}_k, \widehat{v}_k, \widehat{\tau}_k)$ satisfies

$$F(\widehat{w}_k) = F(\widehat{w}_k) - \min_w F(w) \leq O\Big(\frac{1}{\sqrt{nk}}\Big), \tag{4.47}$$

where the equality in the first line above follows from using the fact that $\min_w F(w) = 0$ by construction.

Finally, note that the returned point $\widehat{w}^{\mathrm{MP}} \in \operatorname{argmin}_{w \in \widehat{\mathcal{W}}} F_{S_2}(W)$ where $\mathcal{W} = \{\widehat{w}_1, \ldots, \widehat{w}_k\}$. Lemma 14 thus implies that the point $\widehat{w}^{\mathrm{MP}}$ satisfies

$$\begin{aligned}
F(\widehat{w}^{\mathrm{MP}}) &\leq \min_{j \in [k]} F(\widehat{w}_j) + O\Big(\frac{L \log(k/\delta)}{n} + \sqrt{\frac{\min_{j \in [k]} F(\widehat{w}_j)\, L \log(k/\delta)}{n}}\Big) \\
&\leq F(\widehat{w}_k) + O\Big(\frac{L \log(k/\delta)}{n} + \sqrt{\frac{F(\widehat{w}_k)\, L \log(k/\delta)}{n}}\Big) \\
&\leq \frac{1}{\sqrt{nk}} + O\Big(\frac{\log(k/\delta)}{n} + \frac{1}{n}\sqrt{\frac{\log(k/\delta)}{k}}\Big),
\end{aligned}$$

where L-denotes the Lipschitz constant for the function f and the inequality in the last line follows by plugging in the bound on $F(\widehat{w}_k)$ from (4.47) and using the fact that $L = O(1)$. Finally, observing that $\min_w F(w) = 0$, the above bound implies that

$$F(\widehat{w}^{\mathrm{MP}}) - \min_w F(w) \leq O\Big(\frac{1}{\sqrt{nk}}\Big)$$

for $k = o(n)$; proving the desired claim.

Proof of part-(c). The proof follows exactly along the lines of the proof of Theorem 13 in Section 4.8.2. Recall that $n \geq 300$ and $d \geq \log(10)2^n + 1$.

Assume, for the sake of contradiction, that there exists a regularizer $R : \mathbb{R} \times \mathbb{R}^{n+1} \times \mathbb{R}^d \to \mathbb{R}$ such that for any distribution $\mathcal{D} = \mathcal{D}(\frac{1}{10}, \frac{1}{2}, e_{j^*})$ (see Definition 11) for generating the components of z, the expected suboptimality gap for RERM is at

most $\varepsilon = 1/20000$. Then, by Markov's inequality, with probability at least 0.9 over the choice of sample set S, the suboptimality gap is at most 10ε.

First, since the population loss separates out nicely in terms of losses for u, v, τ in (4.46), we conclude that if (u', v', τ') is a 10ε-suboptimal minimizer for the population loss when components of z are drawn from $\mathcal{D}$, then u', v', and τ' must be individually 10ε-suboptimal minimizers for the functions $-\frac{1}{\sqrt{kn}}\min\{u, 1\}$, $f_N(v)$ and $\mathbb{E}_{z\sim\mathcal{D}}[f_{(A)}(\tau; z)]$ respectively. Additionally, from Lemma 15, we must have that $\|\tau' - e_{j^*}\| \leq 100\varepsilon$. With this insight, for any $j \in [d]$, define the set

$$G_j := \left\{(u, v, \tau) : \ -\tfrac{1}{\sqrt{kn}}\min\{u, 1\} \leq -\tfrac{1}{\sqrt{kn}} + 10\varepsilon, \ f_N(v) \leq -\tfrac{1}{2+2\sqrt{n+1}} + 10\varepsilon, \ \|\tau - e_j\| \leq 100\varepsilon\right\}.$$

This set covers all possible 10ε-suboptimal minimizers of the population loss. Also, for convenience, we use the notation

$$w = (u, v, \tau).$$

As in the proof of Theorem 13, define the points w_j^* for $j \in \{0, 1, \ldots, d\}$ to be

$$w_j^* \in \operatorname*{argmin}_{w \in G_j} R(w)$$

Now we are ready to define j^*: let $j^* \in [d]$ be any element of $\operatorname{argmax}_{j\in[d]} \ R(w_j^*)$. The proof now follows similarly to the proof of Theorem 13. In particular, in the following, we condition on the occurrence of the event E defined in the proof of Theorem 13.

Now define $c := -\frac{1}{\sqrt{kn}} - \frac{1}{2+2\sqrt{n+1}}$. It is easy to see that for any $w = (u, v, \tau) \in G_j$ for any $j \in [d]$, we have

$$c \leq -\tfrac{1}{\sqrt{kn}}\min\{u, 1\} + f_N(v) \leq c + 20\varepsilon. \tag{4.48}$$

Next, consider the point $w^*_{\widehat{j}}$ defined in (4.11) for the special coordinate $\widehat{j}$. Reasoning similarly to the proof of Theorem 13, we conclude that that $w^*_{\widehat{j}}$ cannot be an ε-suboptimal minimizer of F, and thus $w^*_{\widehat{j}}$ can not be a minimizer of the regularized empirical risk (as all RERM solutions are 10ε-suboptimal w.r.t. the population loss F). Thus, we must have

$$\begin{aligned}\widehat{F}(w^*_{\widehat{j}}) + R(w^*_{\widehat{j}}) &> \min_{w \in G_{j^*}} \Big(\widehat{F}(w) + R(w)\Big) \\ &\geq \min_{w \in G_{j^*}} \widehat{F}(w) + \min_{w \in G_{j^*}} R(w) \\ &\geq R(w^*_{j^*}) + c - 100\varepsilon, \end{aligned} \tag{4.49}$$

where $\widehat{F}$ denotes the empirical loss on $S_{,}$ and the last inequality above follows from (4.48) and due to the fact that: if $w^* = (u^*, v^*, \tau^*)$ is the minimizer of $\widehat{F}(w)$ over G_{j^*}, and $s \in [k]$ is the index such that $u^* \in I_s$, then the function $\tau \mapsto \frac{1}{n}\sum_{i=1}^n y_{i,s}\|\tau \odot x_{i,s}\|$ is 1-Lipschitz and takes the value 0 at $\tau = e_{j^*}$.

On the other hand, if $w^*_{\widehat{j}} = (\widehat{u}, \widehat{v}, \widehat{\tau})$ and $s \in [k]$ is the index such that $\widehat{u} \in I_s$, then using (4.48), we have

$$\begin{aligned}\widehat{F}(w^*_{\widehat{j}}) &\leq \tfrac{1}{n}\textstyle\sum_{i=1}^n y_{i,s}\|(\widehat{\tau} - e_{j^*}) \odot x_{i,s}\| - \tfrac{1}{\sqrt{kn}}\min\{\widehat{u}, 1\} + f_N(\widehat{v}) \\ &\leq \tfrac{1}{n}\textstyle\sum_{i=1}^n y_{i,s}\|(\widehat{\tau} - e_{j^*}) \odot x_{i,s}\| + c + 20\varepsilon. \end{aligned} \tag{4.50}$$

Now, since we are conditioning on the occurrence of the event E, using the same chain of inequalities leading to (4.14), we conclude that

$$\tfrac{1}{n}\textstyle\sum_{i=1}^n y_{i,s}\|(\widehat{\tau} - e_{j^*}) \odot x_{i,s}\| \leq 100\varepsilon - \tfrac{3}{200}. \tag{4.51}$$

Combining (4.49), (4.50), and (4.51) and rearranging the terms, we get

$$220\varepsilon \geq R(w^*_{j^*}) - R(w^*_{\widehat{j}}) + \frac{3}{200} \geq \frac{3}{200}. \tag{4.52}$$

where the second inequality above holds because $j^* \in \operatorname{argmax}_{j \in [d]} R(w^*_j)$ (by definition). Thus, $\varepsilon \geq 3/44000 > 1/20000$, a contradiction, as desired. □

4.8.5 Proofs for Section 4.5

Throughout this section, we assume that a data sample z consists of (x, α), where $x \in \{0,1\}^d$ and $\alpha \in \{0, e_1, \ldots, e_d\}$. The loss function $f_{(B)} : \mathbb{R}^d \times \mathcal{Z}$ is given by:

$$f_{(B)}(w; z) = \frac{1}{2}\|(w-\alpha) \odot x\|^2 - \frac{c_n}{2}\|w-\alpha\|^2 + \max\{1, \|w\|^4\}, \tag{4.53}$$

where $c_n := n^{-(\frac{1}{4}-\gamma)}$ for some $\gamma > 0$. We will also assume that $c_n \leq \frac{1}{4}$. Furthermore, since $f_{(B)}(w; z)$ is not differentiable when $\|w\| = 1$, we make the following convention to define the sub-gradient:

$$\partial f(w; z) = (w-\alpha) \odot x - c_n(w-\alpha) + 4\mathbf{1}\{\|w\| > 1\}\|w\|^2 w. \tag{4.54}$$

Whenever clear from the context in the rest of the section, we will ignore the subscript (B), and denote the loss function by $f(w; z)$. Additionally we define the following distribution over the samples $z = (x, \alpha)$.

Definition 12. *For parameters $\delta \in [0, \frac{1}{2}]$, $c_n \in [0, 1]$, and $v \in \{0, e_1, \ldots, e_d\}$, define the distribution $\bar{\mathcal{D}}(\delta, c_n, v)$ over $z = (x, \alpha)$ as follows:*

$$x \sim \mathcal{B}(c_n + \delta)^{\otimes d} \qquad \textit{and} \qquad \alpha = v.$$

The components x and α are sampled independently.

Supporting technical results

Before delving into the proofs, we first establish some technical properties of the empirical loss $f(w; z)$ and the population loss $F(w)$. The following lemma states that for any distribution $\mathcal{D}$, the minimizers of the population loss $F(w) := \mathbb{E}_{z\sim\mathcal{D}}[f(w; z)]$ are bounded in norm.

Lemma 21. *Suppose $c_n \leq \frac{1}{4}$. Then for any data distribution $\mathcal{D}$, the minimizer of $F(w) := \mathbb{E}_{z\sim\mathcal{D}}[f(w;z)]$ has norm at most 1.*

Proof. Note that for any w such that $\|w\| > 1$, we have

$$f(w;z) \geq -c_n(\|w\|^2 + \|\alpha\|^2) + \|w\|^4 \geq -c_n\|w\|^2 - c_n + \|w\|^4 > 1 - 2c_n.$$

Thus, $F(w) > 1 - 2c_n$. On the other hand, $f(0;z) = \frac{1}{2}\|\alpha \odot x\|^2 - \frac{c_n}{2}\|\alpha\|^2 \leq \frac{1-c_n}{2}$. Hence, $F(0) \leq \frac{1-c_n}{2} \leq 1 - 2c_n$ since $c_n \leq \frac{1}{4}$. This implies that such a w is not a minimizer of $F(w)$. □

We show now that the single stochastic gradient descent update keeps the iterates bounded as long as the learning rate η is chosen small enough.

Lemma 22. *Suppose that the learning rate $\eta \leq \frac{1}{100}$ and the point w satisfies $\|w\| \leq 2.5$. Let $w^+ = w - \eta \cdot \partial f(w;z)$ for an arbitrary data point z in the support of the data distribution. Then $\|w^+\| \leq 2.5$.*

Proof. We prove the lemma via a case analysis:

1. **Case 1: $\|w\| < 2$.** Using (4.54) and the Triangle inequality, we get that

$$\begin{aligned}\|\partial f(w;z)\| &\leq \|(w-\alpha)\odot x\| + \|c_n(w-\alpha)\| + 4\|w\|^3 \\ &\leq (1+c_n)(\|w\| + \|\alpha\|) + 4\|w\|^3 \leq 36, \end{aligned} \tag{4.55}$$

   where the last inequality follows from the fact that the iterate w satisfies $\|w\| \leq 2$, and that the parameter $c_n \leq \frac{1}{4}$ and $\|\alpha\| \leq 1$.

   Now, for the gradient descent update rule $w_{t+1} = w_t - \eta\partial f(w;z)$, an application of the triangle inequality implies that

$$\|w_{t+1}\| = \|w - \eta\partial f(w;z)\| \leq \|w\| + \eta\|\partial f(w;z)\|. \tag{4.56}$$

Plugging in the bounds on $\|\partial f(w;z)\|$ derived above, we get that

$$\|w^+\| \leq 2 + 36\eta \leq 2.5 \tag{4.57}$$

since $\eta \leq \frac{1}{100}$.

2. **Case 2: $2 \leq \|w\| \leq 2.5$.** We start by observing that the new iterate w^+ satisfies

$$\begin{aligned}\|w^+\|^2 &= \|w_t - \eta\partial f(w;z)\|^2 \\ &= \|w\|^2 + \eta^2\|\partial f(w;z)\|^2 - 2\eta\langle w, \partial f(w;z)\rangle. \end{aligned}\tag{4.58}$$

Reasoning as in case 1 above, using the fact that $\|w\| \leq 2.5$, we have $\|\partial f(w;z)\| \leq 70$. Furthermore,

$$\begin{aligned}\langle w, \partial f(w;z)\rangle &= \langle w, (w-\alpha)\odot x - c_n(w-\alpha) + 4\|w\|^2 w\rangle \\ &= 4\|w\|^4 + \langle w, w\odot x\rangle - \langle w, \alpha\odot x + c_n(w-\alpha)\rangle \\ &\overset{(i)}{\geq} 4\|w\|^4 - \langle w, \alpha\odot x + c_n(w-\alpha)\rangle \\ &\overset{(ii)}{\geq} 4\|w\|^4 - \|w\|((1+c_n)\|\alpha\| + c_n\|w\|)\end{aligned}$$

where the inequality in (i) follows from the fact that $\langle w, w\odot x\rangle \geq 0$, the inequality in (ii) is given by an application of Cauchy-Schwarz inequality followed by Triangle inequality. Next, using the fact that $c_n \leq \frac{1}{4}$ and $\|\alpha\| \leq 1$, we get

$$\langle w, \partial f(w;z)\rangle \geq 4\|w\|^4 - \|w\|\Big(\frac{5}{4} + \frac{1}{4}\|w\|\Big) \geq 60, \tag{4.59}$$

where the last inequality holds as the polynomial $f(a) := 4a^4 - a(1.25 + 0.25a)$ is an increasing function of a over the domain $a \in [2, \infty)$.

Plugging the bound $\|\partial f(w;z)\| \leq 70$ and and (4.59) in (4.58), we have

$$\|w^+\|^2 \leq \|w\|^2 + 4900\eta^2 - 60\eta \leq \|w\|^2,$$

since $\eta \leq \frac{1}{100}$. Thus, $\|w^+\| \leq \|w\| \leq 2.5$.

Thus, in either case, $\|w^+\| \leq 2.5$, completing the proof. $\square$

Corollary 2. *Suppose that the learning rate $\eta \leq 1/100$ and the initial point w_1 be such that $\|w_1\| \leq 2.5$. Then the iterates obtained when running either full gradient descent on the empirical risk, or by running SGD, have norm bounded by 2.5 at all times $t \geq 0$.*

Proof. The iterates obtained during the running of any of the gradient descent variants described in the statement of the lemma can be seen as convex combinations of single sample gradient descent updates. Thus, the bound on the norm follows immediately from Lemma 22 via the convexity of the norm. $\square$

The following lemma shows that the loss function $f(w; z)$ is Lipschitz in the domain of interest, i.e. the ball of radius 2.5. This is the region where all iterates produced by gradient based algorithms and the global minimizers of the population loss (for any distribution $\mathcal{D}$) are located in.

Lemma 23. *In the ball of radius 2.5 around 0, and for any data point z, the function $w \mapsto f(w; z)$ is 70-Lipschitz.*

Proof. For w such that $\|w\| \leq 2.5$, using (4.54) and the Triangle inequality, we get that

$$\begin{aligned}\|\partial f(w; z)\| &\leq \|(w - \alpha) \odot x\| + \|c_n(w - \alpha)\| + 4\|w\|^3 \\ &\leq (1 + c_n)(\|w\| + \|\alpha\|) + 4\|w\|^3 \leq 70.\end{aligned}$$

$\square$

Proof of Proposition 4

Proof. The proof is rather simple. To show this statement, we consider two distributions $\mathcal{D}_1$ and $\mathcal{D}_2$ on the instance space. What we will show is that if a learning algorithm succeeds with a rate any better than c_n on one distribution, then it has to have a worse rate on the other distribution. Thus, we will conclude that any learning algorithm cannot obtain a rate better than c_n.

Without further delay, let us define the two distributions we will use in this proof. The first distribution $\mathcal{D}_1$ is given by:

$$x \sim \mathcal{B}\left(\frac{1}{2}\right)^{\otimes d} \quad \text{and} \quad \alpha = 0$$

and the second distribution we consider is $\mathcal{D}_2$ given as follows, first, we draw $\tilde{j} \sim \text{Unif}[d]$, next we set $x[\tilde{j}] = 0$ deterministically, finally, on all other coordinates $i \neq \tilde{j}$, $x[\tilde{j}] \sim \text{unif}\{0, 1\}$. We also set $\alpha = 0$ deterministically.

Now the key observation is the following. Since $d > 2^n$, when we draw n samples from distribution $\mathcal{D}_1$ with constant probability there is a coordinate $\hat{j}$ such that $x_t[\hat{j}] = 0$ for all $t \in [n]$. Further, $\hat{j}$ can be any one of the d coordinates with equal probability. However, on the other hand, if we draw n samples from distribution $\mathcal{D}_2$, then by definition of $\tilde{j}$, we have that $x_t[\tilde{j}] = 0$ for any $t \in [n]$. The main observation is that the learning algorithm is agnostic to the distribution on instances. Now since a draw of n samples from $\mathcal{D}_1$ has a coordinate $\hat{j}$ that to the algorithm is indistinguishable from coordinate $\tilde{j}$ when n samples are drawn from $\mathcal{D}_2$, the algorithm cannot identify which of the two distributions the sample if from.

Hence, with constant probability both samples from $\mathcal{D}_1$ and $\mathcal{D}_2$ will be indistin-

guishable. However note that for distribution $\mathcal{D}_1$ we have

$$F_1(w) = \mathbb{E}_{z\sim\mathcal{D}_1} f(w,z) = \frac{1}{2}\Big(\frac{1}{2} - c_n\Big)\|w\|^2 + \max\{1, \|w\|^4\},$$

and for distribution $\mathcal{D}_2$,

$$F_2(w) = \mathbb{E}_{z\sim\mathcal{D}_2} f(w,z) = \frac{1}{2}\Big(\frac{1}{2} - c_n\Big)\|w_{[d]\setminus\{\tilde{j}\}}\|^2 - \frac{c_n}{2}|w[\tilde{j}]|^2 + \max\{1, \|w\|^4\}.$$

Hence notice that for any w,

$$\begin{aligned} F_1(w) - \inf_w F_1(w) &= \frac{1}{2}\Big(\frac{1}{2} - c_n\Big)\|w\|^2 + \max\{1, \|w\|^4\} - 1 \\ &\geq \frac{1}{2}\Big(\frac{1}{2} - c_n\Big)\|w\|^2 \geq \frac{1}{2}\Big(\frac{1}{2} - c_n\Big)|w[\tilde{j}]|^2 \end{aligned}$$

and

$$\begin{aligned} F_2(w) - \inf_w F_2(w) &= \frac{1}{2}\Big(\frac{1}{2} - c_n\Big)\|w_{[d]\setminus\{\tilde{j}\}}\|^2 - \frac{c_n}{2}|w[\tilde{j}]|^2 + \max\{1, \|w\|^4\} + \frac{c_n}{2} - 1 \\ &\geq \frac{1}{2}\Big(\frac{1}{2} - c_n\Big)\|w_{[d]\setminus\{\tilde{j}\}}\|^2 - \frac{c_n}{2}|w[\tilde{j}]|^2 + \frac{c_n}{2} \\ &\geq -\frac{c_n}{2}|w[\tilde{j}]|^2 + \frac{c_n}{2} \end{aligned}$$

Now as mentioned before, they key observation is that with constant probability we get a sample using which we cant distinguish between whether we got samples from $\mathcal{D}_1$ or from $\mathcal{D}_2$. Hence in this case, if we want to obtain a good suboptimality, we need to pick a common solution w for which both $F_1(w) - \inf_w F_1(w)$, and $F_2(w) - \inf_w F_2(w)$ are small. However, note that if we want a w for which $F_2(w) - \inf_w F_2(w) \leq c_n/4$, then it must be the case that

$$\frac{c_n}{4} \geq -\frac{c_n}{2}|w[\tilde{j}]|^2 + \frac{c_n}{2}$$

and hence, it must be the case that, $|w[\tilde{j}]| \geq \frac{1}{\sqrt{2}}$. However, for such a w from the above we clearly have that

$$F_1(w) - \inf_w F_1(w) \geq \frac{1}{2}\Big(\frac{1}{2} - c_n\Big)|w[\tilde{j}]|^2 \geq \frac{1}{4}\Big(\frac{1}{2} - c_n\Big) \geq \frac{1}{9}$$

(as long as $c_n = o(1)$). Thus we can conclude that no learning algorithm can attain a rate better than $c_n/4$. $\square$

Proof of Theorem 16

We prove part-(a) and part-(b) separately below. The following proof of Theorem 16-(a) is similar to the proof of Theorem 13 given in Section 4.8.2.

Proof of Theorem 16-(a). In the following proof, we will assume that n is large so that $nc_n^2 \geq 200$ and that $d \geq \ln(10)(1-c_n)^{-n} + 1$.

Assume, for the sake of contradiction, that there exists a regularizer $R : \mathbb{R}^d \to \mathbb{R}$ such that for any distribution $\mathcal{D} \in \mathscr{D}_c$ the expected suboptimality gap for the RERM solution is at most $\varepsilon/10$. Then, by Markov's inequality, with probability at least 0.9 over the choice of sample set S, the suboptimality gap is at most ε. We will show that ε must be greater than $c_n^2/3200$ for some distribution in the class $\mathscr{D}_c$, hence proving the desired claim.

We first define additional notation. Set $\delta = c_n/10$ and define $\widetilde{\varepsilon} := \varepsilon/\delta$. For the regularization function $R(\cdot)$, define the points w_j^* for $j \in [d]$ such that

$$w_j^* \in \operatorname*{argmin}_{w \text{ s.t. } \|w-e_j\|^2 \leq \tilde{\varepsilon}} R(w). \tag{4.60}$$

and define the index $j^* \in [d]$ such that $j^* \in \operatorname{argmax}_{j\in[d]} R(w_j^*)$. We are now ready to prove the desired claim.

Consider the data distribution $\mathcal{D}_1 := \bar{\mathcal{D}}(\delta, c_n, e_{j^*})$ (see Definition 12) and suppose that the dataset $S = \{z_i\}_{i=1}^n$ is sampled i.i.d. from $\mathcal{D}_1$. The population loss $F(w)$ corresponding to $\mathcal{D}_1$ is given by

$$F(w) = \mathbb{E}_{z\sim\mathcal{D}_1}[f(w;z)] = \frac{\delta}{2}\|w - e_{j^*}\|^2 + \max\{1, \|w\|^4\}.$$

Clearly, $F(w)$ is convex in w and thus the distribution $\mathcal{D}_1 \in \mathscr{D}_c$. Furthermore, e_{j^*} is the unique minimizer of $F(\cdot)$, and any ε-suboptimal minimizer w' for $F(\cdot)$ must

satisfy

$$\|w' - e_{j^*}\|^2 \leq \frac{2\varepsilon}{\delta} = 2\widetilde{\varepsilon} \leq \frac{1}{5}. \tag{4.61}$$

To see the above, note that if w' is an ε-suboptimal minimizer of $F(w)$, then $F(w) \leq F(e_{j^*}) + \varepsilon = 1 + \varepsilon$. However, we also have that $F(w') \geq \delta\|w - e_{j^*}\|^2 + 1$. Taking the two inequalities together, and using the fact that $\tilde{\varepsilon} \leq 1/10$, we get the desired bound on $\|w - e_{j^*}\|$.

Next, define the event E such that the following hold:

(a) For the coordinate j^*, we have $\sum_{z \in S} x[j^*] \leq n(c_n + 2\delta)$.

(b) There exists $\widehat{j}$ such that $\widehat{j} \neq j^*$ and $x[\widehat{j}] = 0$ for all $z \in S$.

(c) RERM (with regularization $R(\cdot)$) using the dataset S returns an ε-suboptimal solution for the test loss $F(w)$.

Since $x[j^*] \sim \mathcal{B}(c_n + \delta)$, Hoeffding's inequality (Lemma 13) implies that the event (a) above occurs with probability at least 0.8 for $n \geq 2/\delta^2 = 200/c_n^2$. Furthermore, Lemma 11 gives us that the event (b) above occurs with probability at least 0.9 for $d \geq \ln(10)(1 - c_n)^{-n}$. Finally, the assumed performance guarantee for RERM with regularization $R(\cdot)$ implies that the event (c) above occurs with probability at least 0.9. Thus, the event E occurs with probability at least 0.6. In the following, we condition on the occurrence of the event E.

Consider the point $w^*_{\widehat{j}}$, defined in (4.60) corresponding to the coordinate $\widehat{j}$ (that occurs in event E). By definition, we have that $\|w^*_{\widehat{j}} - e_{\widehat{j}}\|^2 \leq \tilde{\varepsilon}$, and thus

$$\begin{aligned}\|w^*_{\widehat{j}} - e_{j^*}\|^2 &\geq \frac{1}{2}\|e_{\widehat{j}} - e_{j^*}\|^2 - \|w^*_{\widehat{j}} - e_{\widehat{j}}\|^2 \\ &\geq 1 - \tilde{\varepsilon} \geq \frac{1}{4},\end{aligned}$$

where the first line above follows from the identity that $(a+b)^2 \leq 2a^2 + 2b^2$ for any $a, b > 0$, and the second line holds because $\widehat{j} \neq j^*$ and because $\widetilde{\varepsilon} \leq 1/10$. As a consequence of the above bound and the condition in (4.61), we get that the point $w^*_{\widehat{j}}$ is not an ε-suboptimal point for the population loss $F(\cdot)$, and thus would not be the solution of the RERM algorithm (as the RERM solution is ε-suboptimal w.r.t $F(w)$). Since, any RERM must satisfy condition (4.61), we have that

$$\begin{aligned}
\widehat{F}(w^*_{\widehat{j}}) + R(w^*_{\widehat{j}}) &> \min_{w:\ \|w-e_{j^*}\|^2 \leq \tilde{\varepsilon}} \big(\widehat{F}(w) + R(w)\big) \\
&\geq \min_{w:\ \|w-e_{j^*}\|^2 \leq \tilde{\varepsilon}} \widehat{F}(w) + \min_{w:\ \|w-e_{j^*}\|^2 \leq \tilde{\varepsilon}} R(w) \\
&\overset{(i)}{\geq} \min_{w:\ \|w-e_{j^*}\|^2 \leq \tilde{\varepsilon}} \Big(-\frac{c_n}{2}\|w - e_{j^*}\|^2 + \max\{1, \|w\|^4\}\Big) + R(w^*_{j^*}) \\
&\geq \min_{w:\ \|w-e_{j^*}\|^2 \leq \tilde{\varepsilon}} \Big(-\frac{c_n}{2}\|w - e_{j^*}\|^2 + 1\Big) + R(w^*_{j^*}) \\
&= -\frac{c_n}{2} \cdot \tilde{\varepsilon} + 1 + R(w^*_{j^*}) \\
&\overset{(ii)}{\geq} -\frac{c_n}{20} + 1 + R(w^*_{j^*}) \qquad (4.62)
\end{aligned}$$

where $\widehat{F}(w) := \frac{1}{n}\sum_{i=1}^n f(w; z_i)$ denotes the empirical loss on the dataset S, the inequality (i) follows by ignoring non-negative terms in the empirical loss $\widehat{F}(w)$, and the inequality (ii) is due to the fact that $\tilde{\varepsilon} \leq 1/10$. For the left hand side, we note that

$$\begin{aligned}
\widehat{F}(w^*_{\widehat{j}}) &= \frac{1}{2n}\sum_{(x,\alpha)\in S} \|(w^*_{\widehat{j}} - e_{j^*}) \odot x\|^2 - \frac{c_n}{2}\|(w^*_{\widehat{j}} - e_{j^*})\|^2 + \max\{1, \|w^*_{\widehat{j}}\|^4\} \\
&\overset{(i)}{\leq} \widetilde{\varepsilon} + \frac{1}{2n}\sum_{(x,\alpha)\in S} \|(e_{\widehat{j}} - e_{j^*}) \odot x\|^2 - \frac{c_n}{2}\|(e_{\widehat{j}} - e_{j^*})\|^2 + \max\{1, (1+\tilde{\varepsilon})^4\} \\
&\overset{(ii)}{\leq} 16\widetilde{\varepsilon} + \frac{1}{2n}\sum_{(x,\alpha)\in S} \|(e_{\widehat{j}} - e_{j^*}) \odot x\|^2 - \frac{c_n}{2}\|(e_{\widehat{j}} - e_{j^*})\|^2 + 1 \\
&\overset{(iii)}{\leq} 16\widetilde{\varepsilon} + \frac{1}{2}(c_n + 2\delta) - \frac{\sqrt{2}c_n}{2} + 1, \qquad (4.63)
\end{aligned}$$

where the inequality (i) above holds because $\|w^*_{\widehat{j}} - e_{\widehat{j}}\| \leq \tilde{\varepsilon}$ (by definition) and because $\|e_{\widehat{j}}\| = 1$. The inequality in (ii) follows from the fact that $(1+a)^4 \leq 1+15a$ for $a < 1$. Finally, the inequality (iii) is due to the fact that $x[\widehat{j}] = 0$ for all $(x, \alpha) \in S$ and because $\sum_{(x,\alpha)\in S} x[j^*] \leq n(c_n + 2\delta)$ due to the conditioning on the event E.

Combining the bounds in (4.62) and (4.63), plugging in $\delta = c_n/10$, and rearranging the terms, we get that

$$16\widetilde{\varepsilon} \geq \frac{c_n}{20} + R(w^*_{j^*}) - R(w^*_{\widehat{j}}) \geq \frac{c_n}{20},$$

where the second inequality above holds because $j^* \in \text{argmax}_{j\in[d]} R(w^*_j)$ (by definition). Since, $\tilde{\varepsilon} = \varepsilon/\delta$, we conclude that

$$\varepsilon \geq \delta \cdot \frac{c_n}{320} \geq \frac{c_n^2}{3200}.$$

The above suggests that for data distribution $\mathcal{D}_1$, RERM algorithm with the regularization function $R(w)$ will suffer an excess risk of at least $\Omega(c_n^2)$ (with probability at least 0.9). Finally note that $R(w)$ could be any arbitrary function in the above proof, and thus we have the desired claim for any regularization function $R(w)$. $\square$

We now prove Theorem 16-(b). In the following, we give convergence guarantee for SGD algorithm given in (5.2) when run with step size $\eta = 1/20\sqrt{n} < 1/100$ using the dataset $S = \{z_i\}_{i=1}^n$ drawn i.i.d. from a distribution $\mathcal{D}$. We further assume that assume that the initial point $w_1 = 0$, and thus $\|w_1\| \leq 2.5$. Note that having initial weights to be bounded is typical when learning with non-convex losses, for eg. in deep learning.

Proof of Theorem 16-(b). We consider the two cases, when $D \in \mathscr{D}_c$ and when

$D \notin \mathscr{D}_c$, separately below:

Case 1: When $\mathcal{D} \in \mathscr{D}_c$. In this case, we note the population loss $F(w) := \mathbb{E}_{z\sim\mathcal{D}}[f(w;z)]$ is convex in w by the definition of the set $\mathscr{D}_c$ in (4.7). Further, since $\eta = 1/20\sqrt{n} < 1/100$, Lemma 22 and Lemma 23 imply that f is 70-Lipschitz. Finally, due to Lemma 21, the initial point $w_1 = 0$ satisfies $\|w_1 - w^*\| \leq 2.5$. Thus, we satisfy both Assumption I and Assumption II in (**??**) and (4.2) respectively, and an application of Theorem 12 implies that the point $\widehat{w}_n^{\text{SGD}}$ enjoys the performance guarantee

$$\mathbb{E}\big[F(\widehat{w}_n^{\text{SGD}}) - w^* \mid E\big] \leq O\Big(\frac{1}{\sqrt{n}}\Big).$$

Case 2: When $\mathcal{D} \notin \mathscr{D}_c$. In order to prove the performance guarantee of SGD algorithm in this case, we split up the loss function $f(w;z)$ into convex and non-convex parts g and $\widetilde{g}$, defined as:

$$g(w;z) := \frac{1}{2}\|(w-\alpha)\odot x\|^2 + \max\{1, \|w\|^4\} \qquad \text{and} \qquad \widetilde{g}(w;z) := -c_n\|w-\alpha\|^2.$$

Further, we define the functions $G(w)$ and $\widetilde{G}(w)$ to denote their respective population counterparts, i.e. $G(w) = \mathbb{E}_{z\sim\mathcal{D}}[g(w;z)]$ and $\widetilde{G}(w) = \mathbb{E}_{z\sim\mathcal{D}}[\widetilde{g}(w;z)]$. Clearly,

$$F(w) = \mathbb{E}_{z\sim\mathcal{D}}[f(w;z)] = G(w) + \widetilde{G}(w). \tag{4.64}$$

Let w^* be a minimizer of $F(w;\mathcal{D})$. By Lemma 21, we have $\|w^*\| \leq 1$. The folltowing chain of arguments follows along the lines of proof of SGD in Case 1 above (see the proof of Theorem **??** on page **??**).

Let the sequence of iterates generated by SGD algorithm be given by $\{w_t\}_{t=1}^T$. We

start by observing that for any $t \geq 0$,

$$\begin{aligned}
\|w_{t+1} - w^*\|_2^2 &= \|w_{t+1} - w_t + w_t - w^*\|_2^2 \\
&= \|w_{t+1} - w_t\|_2^2 + \|w_t - w^*\|_2^2 + 2\langle w_{t+1} - w_t, w_t - w^*\rangle \\
&= \|-\eta \nabla f_w(w_t; z_t)\|_2^2 + \|w_t - w^*\|_2^2 + 2\langle -\eta \nabla f_w(w_t; z_t), w_t - w^*\rangle,
\end{aligned}$$

where the last line follows from plugging in the update step $w_{t+1} = w_t - \eta \nabla f_w(w_t; z_t)$. Rearranging the terms in the above, we get that

$$\begin{aligned}
\langle \nabla f(w_t; z_t), w_t - w^*\rangle &\leq \frac{\eta}{2}\|\nabla f(w_t; z_t)\|_2^2 + \frac{1}{2\eta}\big(\|w_t - w^*\|_2^2 - \|w_{t+1} - w^*\|_2^2\big) \\
&\leq 2450\eta + \frac{1}{2\eta}\big(\|w_t - w^*\|_2^2 - \|w_{t+1} - w^*\|_2^2\big), \qquad (4.65)
\end{aligned}$$

where the second inequality in the above follows from the bound on the Lipschitz constant of the function f when the iterates stay bounded in a ball of radius 2.5 around 0 (see Lemma 23). We split the left hand side as:

$$\langle \nabla f(w_t; z_t), w_t - w^*\rangle = \langle \nabla g(w_t; z_t), w_t - w^*\rangle + \langle \nabla \widetilde{g}(w_t; z_t), w_t - w^*\rangle.$$

This implies that

$$\langle \nabla g(w_t; z_t), w_t - w^*\rangle \leq 2450\eta + \frac{1}{2\eta}\big(\|w_t - w^*\|_2^2 - \|w_{t+1} - w^*\|_2^2\big) + \langle \nabla \widetilde{g}(w_t; z_t), w^* - w_t\rangle.$$

Taking expectation on both the sides with respect to the data sample z_t, while conditioning on the point w_t and the occurrence of the event E, we get

$$\langle \nabla G(w_t), w_t - w^*\rangle \leq 2450\eta + \frac{1}{2\eta}\,\mathbb{E}\big[\|w_t - w^*\|_2^2 - \|w_{t+1} - w^*\|_2^2\big] + \langle \nabla \widetilde{G}(w_t), w^* - w_t\rangle.$$

Next, note that the function $G(w)$ is convex (by definition). This implies that $G(w^*) \geq G(w_t) - \langle \nabla G(w_t), w_t - w^*\rangle$, plugging which in the above relation gives us

$$G(w_t) - G(w^*) \leq 2450\eta + \frac{1}{2\eta}\,\mathbb{E}\big[\|w_t - w^*\|_2^2 - \|w_{t+1} - w^*\|_2^2\big] + \langle \nabla \widetilde{G}(w_t), w^* - w_t\rangle.$$

Telescoping the above for t from 1 to n, we get that

$$\sum_{t=1}^{n}(G(w_t) - G(w^*)) \leq 2450\eta n + \frac{1}{2\eta}\big(\|w_1 - w^*\|_2^2 - \|w_{n+1} - w^*\|_2^2\big) + \sum_{t=1}^{n}\langle \nabla \widetilde{G}(w_t), w^* - w_t\rangle$$
$$\leq 2450\eta n + \frac{\|w_1 - w^*\|_2^2}{2\eta} + \sum_{t=1}^{n}\|\nabla \widetilde{G}(w_t)\|\|w^* - w_t\|,$$

where the inequality in the second line follows by ignoring negative terms, and through an application of Cauchy-Schwarz inequality. Since, $\|w_1\| = 0$ and $\|w^*\| \leq 1$ (due to Lemma 21), we have that $\|w_1 - w^*\| \leq 1$. Setting $\eta = 1/20\sqrt{n}$, using the bound $\|w_1 - w^*\| \leq 1$ and by an application of Jensen's inequality in the left hand side, we get that the point $\widehat{w}_n^{\text{SGD}} := \frac{1}{n}\sum_{t=1}^{n} w_t$ satisfies

$$G(\widehat{w}_n^{\text{SGD}}) - G(w^*) \leq \frac{245}{\sqrt{n}} + \frac{1}{n}\sum_{t=1}^{n}\|\nabla \widetilde{G}(w_t)\|\|w^* - w_t\|. \tag{4.66}$$

Furthermore, by Lemma 22, since $\eta = \frac{1}{20\sqrt{n}} \leq \frac{1}{100}$ and $\|w_1\| \leq 2.5$ (by construction), we have that $\|w_t\| \leq 2.5$ for all t. Thus, $\|w^* - w_t\| \leq 3.5$ for all t. Plugging this bound in (4.66), we get that

$$G(\widehat{w}_n^{\text{SGD}}) - G(w^*) \leq \frac{245}{\sqrt{n}} + 3.5 \max_{t \leq n} \|\nabla \widetilde{G}(w_t)\|.$$

Next, note that from the definition of the function $\widetilde{G}(w_t)$, we have that

$$\|\nabla \widetilde{G}(w_t)\| = c_n\|w_t - \alpha\| \leq 3.5c_n,$$

and thus

$$G(\widehat{w}_n^{\text{SGD}}) - G(w^*) \leq \frac{245}{\sqrt{n}} + 3.5c_n. \tag{4.67}$$

Finally, using the relation (4.64) and taking expectations on both the sides, we have that

$$\mathbb{E}\big[F(\widehat{w}_n^{\text{SGD}}) - F(w^*) \mid E\big] = \mathbb{E}\big[G(\widehat{w}_n^{\text{SGD}}) - G(w^*)\big] + \mathbb{E}[\widetilde{G}(\widehat{w}_n^{\text{SGD}}) - \widetilde{G}(w^*)]$$
$$\leq \frac{245}{\sqrt{n}} + 3.5c_n + c_n\,\mathbb{E}_z[w^* - \alpha\|^2]$$

$$\leq \frac{245}{\sqrt{n}} + 6c_n, \tag{4.68}$$

where the inequality in the second line is due to (4.67) and by using the definition of the function $\widetilde{G}(w)$ and by ignoring negative terms. The last line holds because $\|w^* - \alpha\| \leq \|w^*\| + \|\alpha\| \leq 2$. □

4.8.6 Proofs for Section 4.6

1

Deep learning.

The proof of Theorem 17 is identical to the proof of Theorem 1 for stochastic convex optimization problems, albeit an additional multiplicative α factor. We thus skip the proof.

Proof of Theorem 18

Let the input $\mathcal{X} \in \{0,1\}^d$ and the label $\mathcal{Y} \in [-1,1]$. Consider a two layer neural network with ReLU activation and weights given by $w = (w_1, w_2)$ where $w_1 \in \mathbb{R}^d$ denotes the weights of the first layer and $w_2 \in \mathbb{R}^d$ denotes the weights of the second layer, as shown in Figure 4.2. When given the input x, the output of the network with weights (w_1, w_2) is computed as

$$h(w; x) = \mathrm{ReLU}(w_2^\top \mathrm{ReLU}(w_1 \odot x)).$$

Here, the first layer of the neural network has sparse connections, i.e. each input node connects to only one hidden node. Such networks are denoted as diagonal

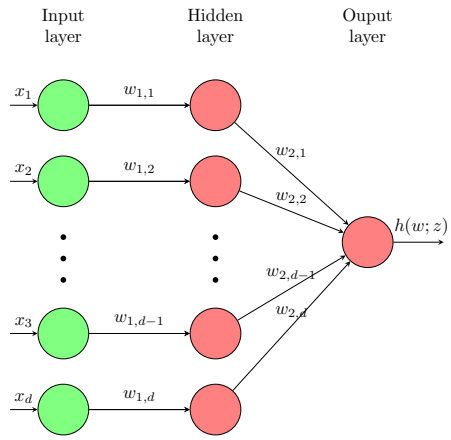

Figure 4.2: Two layer diagonal neural network. The weights are given by $w_1 \in \mathbb{R}^d$ and $w_2 \in \mathbb{R}^d$ for the first layer and the second layer respectively. The green nodes denote input nodes with linear activation function and red node denote hidden units with ReLU activation function.

two layer neural networks. We assume that the neural network is trained using absolute loss function. Specifically, the instantaneous loss on a sample $z = (x, y)$ is given by

$$f(w; z) = |y - h(w; x)| = |y - \mathrm{ReLU}(w_2^\top \mathrm{ReLU}(w_1 \odot x))|. \tag{4.69}$$

Since $f(w; z)$ is not smooth, for any weights $w = (w_1, w_2)$ and sample $z = (x, y)$, we define the gradient of $f(w; z)$ as

$$\nabla_{w_1} \ell(w; z)[i] = -\operatorname{sign}\{y - h(w; x)\} \cdot \mathbf{1}\{w_2^\top \mathrm{ReLU}(w_1 \odot x) > 0\} \cdot (w_{2,i} \cdot \mathbf{1}\{w_{1,i} \cdot x_i > 0\} \cdot x_i)$$

and

$$\nabla_{w_2} \ell(w; z)[i] = -\operatorname{sign}\{y - h(w; x)\} \cdot \mathbf{1}\{w_2^\top \mathrm{ReLU}(w_1 \odot x) > 0\} \cdot (\mathrm{ReLU}(w_{1,i} \cdot x_i)), \tag{4.70}$$

for $i \in [d]$. We next show that the population loss $F(w) := \mathbb{E}_{z \sim \mathcal{D}}[f(w; z)]$ is 1/2-Linearizable.

Lemma 24. *Let $\mathcal{D}$ be defined such that x and y are independent random variables with distributions*

$$x \sim \textit{Uniform}(\{0,1\}^d) \qquad \textit{and} \qquad y \sim \mathcal{B}(1/4).$$

Then, the population loss $F(w) := \mathbb{E}_{z\sim\mathcal{D}}[f(w;z)]$ is 1/2-Linearizable.

Proof. The population loss $F(w)$ is given by:

$$F(w) = \mathbb{E}_{x,y}[|y - h(w;x)|],$$

where $h(w;x) = \mathrm{ReLU}(w_2^\top \mathrm{ReLU}(w_1 \odot x))$. Using the fact that $y \in \{-1,1\}$, and $\Pr(y=1) = 1/4$ and is independent of x, the above can be written as:

$$F(w) = \mathbb{E}_x\left[\frac{3}{4}|h(w;x)| + \frac{1}{4}|1 - h(w;x)|\right].$$

It is easy to verify that $F(w)$ is minimized when $h(w;x) = 0$ for every $x \in \{0,1\}^d$, which occurs at the point $w = 0$. Furthermore, $F(0) = 1/4$. Next, note that for any w, and sample $z = (x,y)$,

$$\begin{aligned}
&\langle w, \nabla_w f(w;z)\rangle \\
&= \langle w_1, \nabla_{w_1} f(w;z)\rangle + \langle w_2, \nabla_{w_2} f(w;z)\rangle \\
&\overset{(i)}{=} -\sum_{i=1}^d w_{1,i} \cdot \operatorname{sign}\{y - h(w;x)\} \cdot \mathbf{1}\{w_2^\top \mathrm{ReLU}(w_1 \odot x) > 0\} \cdot (w_{2,i} \cdot \mathbf{1}\{w_{1,i} \cdot x_i > 0\} \cdot x_i) \\
&\qquad\qquad - \sum_{i=1}^d w_{2,d} \cdot \operatorname{sign}\{y - h(w;x)\} \cdot \mathbf{1}\{w_2^\top \mathrm{ReLU}(w_1 \odot x) > 0\} \cdot (\mathrm{ReLU}(w_{1,i} \cdot x_i)) \\
&= -\operatorname{sign}\{y - h(w;x)\} \cdot \mathbf{1}\{w_2^\top \mathrm{ReLU}(w_1 \odot x) > 0\} \cdot (w_2^\top \mathrm{ReLU}(w_1 \odot x)) \\
&\qquad\qquad - \operatorname{sign}\{y - h(w;x)\} \cdot \mathbf{1}\{w_2^\top \mathrm{ReLU}(w_1 \odot x) > 0\} \cdot (w_2^\top \mathrm{ReLU}(w_1 \odot x)) \\
&= -2\operatorname{sign}\{y - h(w;x)\}\, \mathrm{ReLU}(w_2^\top \mathrm{ReLU}(w_1 \odot x)) \\
&= -2\operatorname{sign}\{y - h(w;x)\}\, h(w;x) \\
&= 2|y - h(w;x)| - 2\operatorname{sign}\{y - h(w;x)\} y
\end{aligned}$$

where the equality (i) follows from using the definition of $\nabla_{w_1} f(w; z)$ and $\nabla_{w_2} f(w; z)$ from (4.70). Taking expectations on both the sides with respect to z, we get that

$$\begin{aligned}
\langle w, \nabla_w F(w) \rangle &= 2\,\mathbb{E}_{x,y}[|y - h(w; x)|] - 2\,\mathbb{E}_{x,y}[\operatorname{sign}\{y - h(w; x)\} y] \\
&= 2F(w) - 2\,\mathbb{E}_{x,y}[\operatorname{sign}\{y - h(w; x)\} y] \\
&\geq 2F(w) - 2\,\mathbb{E}_{x,y}[|y|] \\
&= 2(F(w) - F(0)),
\end{aligned}$$

where the last line follows by observing that $\mathbb{E}[|y|] = \mathbb{E}_{x,y}[|y| - h(0; x)] = F(0)$. Defining $w^* := 0$, the above implies that

$$F(w) - F(w^*) \leq \frac{1}{2} \langle w - w^*, \nabla_w F(w) \rangle,$$

thus showing that $F(w)$ is 1/2-Linearizable. □

Proof of Theorem 18. Consider the distribution $\mathcal{D}$ over the instance space $\mathcal{Z} = \{0, 1\}^d \times \{0, 1\}$ where

$$x \sim \text{Uniform}(\{0, 1\}^d), \qquad \text{and} \qquad y \sim \mathcal{B}(1/4). \tag{4.71}$$

We now prove the two parts separately below:

(a) In the following, we show that SGD algorithm, run with an additional projection on the unit norm ball after every update, learns at a rate of $O(1/\sqrt{n})$. In particular, we use the following update step for $t \in [n]$,

$$w_{t+1}^{\text{SGD}} \leftarrow \Pi_{w_1}\big(w_t^{\text{SGD}} - \eta \nabla f(w_t^{\text{SGD}}; z_t)\big)$$

where the initial point w_1 is chosen by first sampling $w_1' \sim \mathcal{N}(0, \mathbb{I}_d)$ and then setting $w_1 = w_1'/\|w_1\|$, and the projection operation Π is given by

$$\Pi_{w_1}(w) = \begin{cases} w & \text{if } \|w - w_1\| \leq 1 \\ w_1 + \frac{1}{\|w - w_1\|}(w - w_1) & \text{otherwise.} \end{cases}$$

After taking n steps, the point returned by the SGD algorithm is given by $\widehat{w}_n^{\text{SGD}} := \sum_{t=1}^n w_t^{\text{SGD}}/n$.

First note that, for the distribution given in (4.71), Lemma 24 implies that the population loss $F(w)$ is 1/2-Liearizable w.r.t. the global minima $w^* = 0$. Next, note that for any point w and data sample z,

$$\begin{aligned} \|\nabla f(w; z)\|^2 &= \|\nabla_{w_1} f(w; z)\|^2 + \|\nabla_{w_2} f(w; z)\|^2 \\ &\leq \sum_{j=1}^d (w_{2,j} \cdot x_j)^2 + \sum_{j=1}^d (\text{ReLU}(w_{1,j} \cdot x_j))^2 \\ &\leq \sum_{j=1}^d w_{2,j}^2 + \sum_{j=1}^d w_{1,j}^2 \\ &= \|w\|^2 \end{aligned}$$

where the inequality in the second line follows by plugging in the definition of $\nabla_{w_1} f(w; z)$ and $\nabla_{w_2} f(w; z)$, and by upper bounding the respective indicators by 1. The inequality in the third line above holds because $\text{ReLU}(h) \leq |h|$ for any $h \in \mathbb{R}$, and by using the fact that $x_j \in \{0, 1\}$ for $j \in [d]$. Since, the iterates produced by SGD algorithm satisfy $\|w_t^{\text{SGD}}\| \leq 1$ due to the projection step, the above bound implies that $\|\nabla f(w_t^{\text{SGD}}; z)\| \leq 1$ for any $t \geq 0$, and thus $\|\nabla F(w_t^{\text{SGD}})\| \leq 1$.

The above bounds imply that Assumption II (in (4.2)) holds on the iterates generated by the SGD algorithm with $\max\{B, \sigma, L\} \leq 2$. Furthermore, the population loss $F(w)$ is 1/2-Linearizable. Thus, repeating the steps from the

proof of Theorem 17 on page **??**, and using the fact that $\|\Pi_{w_1}(w) - w^*\| \leq \|w - w^*\|$ for $w^* = 0$ to account for the additional projection step, we get that the point $\widehat{w}_n^{\text{SGD}}$ returned by the SGD algorithm enjoys the performance guarantee

$$F(\widehat{w}_n^{\text{SGD}}) - F^* \leq O\Big(\frac{1}{\sqrt{n}}\Big).$$

(b) In the following, we will show that for $d > \log(10)2^n + 1$, with probability at least 0.9 over the choice of $S \sim \mathcal{D}^n$, there exists an ERM solution for which

$$F(w_{\text{ERM}}) - \inf_{w \in \mathbb{R}^d} F(w) \geq \Omega(1).$$

Suppose that the dataset $S = \{(x_i, y_i)\}_{i=1}^n$ is sampled i.i.d. from the distribution $\mathcal{D}$ given in (4.71). A slight modification of Lemma 16 implies that for $n \leq \log_2(d/\log(10))$, with probability at least 0.9, there exists a coordinate $\widehat{j}$ such that $x_i[\widehat{j}] = y_i$ for all $i \in [n]$. In the following, we condition on the occurrence of such a coordinate $\widehat{j}$. Clearly, the empirical loss at the point $\widehat{w} = (e_{\widehat{j}}, e_{\widehat{j}})$ is:

$$\widehat{F}(\widehat{w}) = \sum_{i=1}^n |y_i - \text{ReLU}(e_{\widehat{j}}\text{ReLU}(e_{\widehat{j}} \odot x_i))| = \sum_{i=1}^n |y_i - x_i[\widehat{j}]| = 0,$$

where the last equality follows the fact that $x_i[\widehat{j}] = y_i$ for all $i \in [n]$. Since $\widehat{F}(w) \geq 0$ for any w, we get that the point $\widehat{w}$ is an ERM solution. Next, we note that the population loss at the point $\widehat{w}$ satisfies

$$\begin{aligned} F(\widehat{w}) - \min_w F(w) &\overset{(i)}{=} F(\widehat{w}) - \frac{1}{4} \\ &\overset{(ii)}{=} \mathbb{E}_{x,y}\Big[\Big|y - \text{ReLU}(e_{\widehat{j}}\text{ReLU}(e_{\widehat{j}} \odot x))\Big|\Big] - \frac{1}{4} \\ &= \mathbb{E}_{x,y}[|y - x[\widehat{j}]|] - \frac{1}{4} \overset{(iii)}{=} \frac{1}{4} \end{aligned}$$

where the equality (i) follows by observing that $\min_w F(w) = 1/4$ (see the proof of Lemma 24 for details), the equality (ii) holds for $\widehat{w} = (e_{\widehat{j}}, e_{\widehat{j}})$ and (iii)

follows by using the fact that $y \sim \mathcal{B}(1/4)$ and $x[\widehat{j}] \sim \mathcal{B}(1/2)$ and that x and y are sampled independent to each other. Thus, there exists an ERM solution $w_{\text{ERM}} = \widehat{w}$ for which the excess risk:

$$F(w_{\text{ERM}}) - \min_{w} F(w) = \frac{1}{4}.$$

The desired claim follows by observing that the coordinate $\widehat{j}$ above occurs with probability at least 0.9 over the choice of $S \sim \mathcal{D}^n$.

$\square$

CHAPTER 5

IF GRADIENT FLOW CONVERGES ON TEST LOSS, THEN SGD LEARNS

Stochastic Gradient Descent (SGD) has been a method of choice to train complex, large scale machine learning models. While understanding of SGD for convex objectives is comprehensive, a general understanding of when SGD works for non-convex models has been somewhat elusive. A large slew of properties like, convexity (Nemirovski and Yudin, 1983a), one-point-convexity (Kleinberg et al., 2018b), linearizability (Kale et al., 2021), KŁ (Attouch et al., 2010; Kurdyka, 1998) and PŁ (Karimi et al., 2016b; Polyak, 1963b; Lojasiewicz, 1963) properties, and more problem specific, tailored analysis of SGD and Gradient Descent (GD) for specific problem instances like matrix square-root problem, matrix completion (Jin et al., 2016b), phase retrieval (Candes et al., 2015; Chen et al., 2019; Tan and Vershynin, 2019) and Dictionary learning (Arora et al., 2015) have been proposed. Recent success of SGD in over-parameterized deep learning models have lead to the idea that SGD perhaps optimizes training objective with an implicit bias given by some implicit regularizer (Gunasekar et al., 2018a; Soudry et al., 2018; Ji and Telgarsky, 2018; Gunasekar et al., 2018b,c). However, in Kale et al. (2021) it is argued that there are over-parameterized models for which SGD works but no method that minimizes an implicit regularized training objective can learn successfully, thus showing that in general, the success of SGD cannot be explained by implicit regularization.

The goal of our paper is to provide a unifying analysis for when SGD/GD works. More specifically, we do this via first showing that Gradient Flow (GF) works and then extending this analysis to SGD and GD. Gradient Flow (GF) can be seen as

a continuous time analogue of GD. In an idealized world, if one had access to the population loss, it turns out that convergence analysis for running gradient flow on population loss is somewhat simpler due to tools from continuous time analysis and PDEs. There has been several recent works (Azulay et al., 2021; Chatterji et al., 2021; Chizat and Bach, 2018) that have provided convergence analysis for GF even on non-convex objectives. The high level theme of this paper is to show that, under some mild/appropriate assumptions of population loss/objective and on the noise of gradient estimates, "if, GF converges on population loss, then SGD that uses one fresh example per iteration is successful at learning". Notice, that GF converging on population loss is a purely deterministic optimization problem. However, the fact that SGD works is a learning result that implies a sample complexity bound.

There have been past works that have aimed at providing convergence analysis for Gradient Descent (GD) starting from Gradient Flow (GF). Typical route to obtain a convergence analysis of GD starting from GF tries to think of GD updates as approximating GF path. Even with more sophisticated discretization schemes like Euler discretization, obtaining convergence for GD, starting from GF can be quite complex. In this paper, to show that when GF converges, SGD/GD also converges, we take a different approach. A key tool for proving convergence results for GF is by constructing so called Lyapunov potentials. In the literature of Ordinary Differential Equations (ODEs), when ODEs have regular enough convergence rates, one can show, so called converse Lyapunov theorems (see Kellett (2015) for a nice survey of classic results) that state that when an ODE converges to stable solutions, there has to exist a corresponding Lyapunov potential. While convergence of GF in terms of sub-optimality is quite different from convergence in the ODE sense, in this paper, we first prove a converse Lyapunov style theorem for GF. Specifically, we show that when GF converges in terms of sub-optimality to a global minimum, then

there has to exist a corresponding Lyapunov potential and using such potential, the rates can be recovered. This result becomes a starting point for our analysis. We show that if this Lyapunov potential (obtained from the converse Lyapunov style theorem) satisfies certain extra self-bounding regularity conditions, then one can show that GD and SGD algorithms converge in terms of sub-optimality when appropriate step sizes are used. Such convergence for SGD/GD happens even when the GF path and GD/SGD paths can be quite different.

Our main contributions in this chapter are:

- We prove a converse Lyapunov style theorem that shows that if gradient flow converges with rate specified by with an appropriate rate function, then there exists a corresponding Lyapunov potential that recovers this rate.
- We provide a geometric characterization for a given rate of convergence of gradient flow (ie. GF converges at a particular rate if and only if a specific geometric condition on objective holds.)
- There are problems for which GF converges at a specific rate but GD can be arbitrarily slow to converge.
- This motivates the necessity of additional conditions to ensure GD/SGD converges even when GF converges. We provide certain self-bounding regularity conditions on the Lyapunov potential, under which we show that GD converges. We also provide conditions on gradient estimate noise under which we show that SGD using these gradient estimates also converges.
- We instantiate our results for problems such as matrix square-root and phase retrieval, amongst other applications.

Prelimaries.

Given a continuously differentiable function and non-negative function $F : \mathbb{R}^d \mapsto \mathbb{R}$, our goal is to minimize $F(w)$. Without any loss of generality, we assume that $\min_w F(w) = 0$. First-order algorithms are popular for such optimization tasks. In the following, we formally describe the Gradient Descent and Stochastic Gradient Descent algorithm, and their continuous time counterpart called gradient flow.

Gradient Descent (GD). Gradient descent is the most popular iterative algorithm to minimize differentiable functions. Starting from an initial point w_0, GD on the function $F(w)$ performs the following update on every iteration:

$$w_{t+1} \leftarrow w_t - \eta \nabla F(w_t), \tag{5.1}$$

where η denotes the step size. After T rounds, GD algorithm returns the point $\widehat{w}_T := \operatorname{argmin}_{s \leq T} F(w_s)$.

Stochastic Gradient Descent (SGD). Stochastic gradient descent (SGD) has been the method of choice for optimizing complex convex and non-convex learning problems in practice. In the learning setting, $F(w)$ corresponds to the unknown population loss and can be written as $F(w) = \mathbb{E}_{z \sim \mathcal{D}}[f(w; z)]$ where the expectation is taken with respect to samples z drawn from an unknown distribution $\mathcal{D}$. SGD algorithm (mini-batch size 1) is an iterative algorithm that at every round $t \geq 0$, draws a fresh sample z_t from $\mathcal{D}$ to compute a stochastic unbiased estimate $\nabla f(w_i; z_i)$ of the gradient $\nabla F(w_i)$, and performs the update

$$w_{t+1} \leftarrow w_t - \eta \nabla f(w_t; z_t) \tag{5.2}$$

where η is the step size and w_0 denotes the initial point. After T rounds, SGD algorithm returns $\widehat{w}_T$ by sampling a point uniformly at random from the set $\{w_1, \ldots, w_T\}$.

Gradient Flow (GF). Gradient flow from a point w_0 is continuous time process $(w(t))_{t\geq 0}$ that starts at $w(0) = w_0$ and evolves as

$$\frac{\mathrm{d}w(t)}{\mathrm{d}t} = -\nabla F(w(t)). \tag{5.3}$$

GF has been thought of as a continuous time analogue of GD and is popularly used to understand behavior of gradient based optimization algorithms in the limit, primarily due to its simplicity and lack of step size.

5.1 Gradient Flow, Potentials and Geometry

Lyapunov potentials are a popular tool for understanding convergence of GF (Wilson, 2018; Wilson et al., 2021b; Krichene, 2016b). At an intuitive level, a Lyapunov potential is any non-negative function Φ that satisfies $\langle \nabla\Phi(w), -\nabla F(w)\rangle \leq 0$, i.e. Φ decreases along the GF paths of F. This monotonicity property helps to show asymptotic convergence of GF to stable points of the underlying objective. In our work, we consider potential functions for which the rate of change (decrease) of the potential along the GF path is related to the suboptimality of the objective at that point.

Definition 13 (Admissible potentials)**.** *A differentiable potential function* $\Phi_g : \mathbb{R}^d \mapsto \mathbb{R}^+$ *is admissible w.r.t.* F *on a set* $\mathcal{W}$ *if there exists a monotonically*

increasing function $g : \mathbb{R}^+ \mapsto \mathbb{R}^+$ *with* $g(0) = 0$ *such that for any* $w \in \mathcal{W}$,[1]

$$\langle \nabla \Phi_g(w), \nabla F(w) \rangle \geq g(F(w)). \tag{5.4}$$

Existence of potential functions of the above form can be used to provide rates of convergence for GF as show in the following theorem.

Theorem 23 (From potentials to gradient flow)**.** *Let* $\mathcal{W}$ *be a set of initial points that we want to consider, and let* Φ_g *be an admissible potential w.r.t.* F *on the set* $\text{clo}(\mathcal{W})$*. Then, for any initialization* $w_0 \in \mathcal{W}$*, the point* $w(t)$ *on the GF path with* $w(0) = w_0$ *satisfies for any* $t \geq 0$*,*

$$g(F(w(t))) \leq \frac{\Phi_g(w_0)}{t}.$$

The idea that admissible potential functions imply convergence rates for GF has appeared in various forms in the prior literature (Bansal and Gupta, 2017; Krichene, 2016a; Wilson, 2018; Wilson et al., 2021b). As an example, consider the potential function $\Phi(w) = \|w - w^*\|/2$. Notice that Φ is an admissible potential for any F that is convex with $g(z) = z$. This is because convexity implies that (5.4) is true for any w. Hence, using Theorem 23 we get a $\|w - w^*\|^2/2t$ rate of convergence for GF on any convex objective.

Our main result in this section is to establish a converse Lyapunov style theorem−that given a rate, finds a potential function corresponding to that rate. We start by defining admissible rate functions.

Definition 14 (Admissible rate functions)**.** *A function* $R : \mathbb{R}^d \times \mathbb{R} \mapsto \mathbb{R}^+$ *is an admissible rate function w.r.t.* F *if for any* $w \in \mathbb{R}^d$*,*

[1] Whenever not specified, we assume that the function $g(z) = z$.

(*a*) *$R(w,t)$ is a non-increasing function of t such that* $\lim_{t\to\infty} R(w,t) = 0$.

(*b*) *R satisfies the relation:* $\int_{t=0}^{\infty}\left(\frac{\partial R(w,t)}{\partial t} + \langle \nabla R(w,t), \nabla F(w)\rangle\right) \mathrm{d}t \geq 0$.

Remark 2. *In order to simplify the task of checking whether a given rate is admissible, note that Definition 14-(b) is satisfied whenever the condition* $\frac{\partial R(w,t)}{\partial t} + \langle \nabla R(w,t), \nabla F(w)\rangle \geq 0$ *holds for every* $w, t \geq 0$. *Many rate functions, e.g.* $R(w,t) = F(w)e^{-t}$ *and F being KŁ, in fact satisfy this condition for every* $w, t \geq 0$.

Furthermore, also note that Definition 14-(b) is satisfied whenever the rate function is such that $R(w(s),t) \leq R(w, s+t)$ *for all* $s, t \geq 0$ *and* $w \in \mathbb{R}^d$, *which may be an easier to check condition, e.g. when* $R(w,t) = F(w)e^{-t}$.

We utilize admissible rate functions to characterize behavior of GF on F. Before we proceed, let us motivate the two properties above. Property (*a*) is natural for any rate function and captures the fact that running GF for more time leads to better guarantees. For property (*b*), we interpret the form in Remark 2 that $R(w(s),t) \leq R(w, s+t)$ for all $s, t \geq 0$. This property, while seeming a bit mysterious, captures the fact that having additional information about the GF path should only improve the rate. Note that $R(w(0), s+t)$ corresponds to an upper bound on the sub-optimality at $w(s+t)$ and $R(w(s),t)$ corresponds to an upper bound on the same quantity but with the additional information that $w(s)$ is a point on the GF path. Furthermore, given any rate function R, it is easy to construct a new rate function $\bar{R}$ that always satisfies property (*b*) by defining $\bar{R}(w,t) = \min_{s\geq 0} R(w', t+s)$ where w' is any point such that the point w lies on the GF path from w' at time s. We also remark that the function $R(w,t) = F(w(t))$ is always an admissible rate function. Furthermore, all the rate functions appearing in this paper satisfy the above properties.

Our next result shows how existence of rate functions for GF that satisfy the above properties can be used to construction admissible potentials w.r.t. F.

Theorem 24 (From gradient flow to potentials)**.** *Let $\mathcal{W} \subseteq \mathbb{R}^d$ be any set of initial points that we want to consider, and R be an admissible rate function w.r.t. all GF paths originating from any point in $\mathcal{W}$. Further, suppose that for any $w_0 \in \mathcal{W}$, the point $w(t)$ on the GF path satisfies $F(w(t)) \leq R(w_0, t)$, then the function Φ_g defined as*

$$\Phi_g(w) = \int_{t=0}^{\infty} g(R(w,t))\,\mathrm{d}t \tag{5.5}$$

is an admissible potential w.r.t. F on the set $\mathrm{clo}(\mathcal{W})$, for any differentiable and monotonically increasing function $g : \mathbb{R}^+ \mapsto \mathbb{R}^+$ that satisfies $\int_{t=0}^{\infty} g(R(w,t))\,\mathrm{d}t < \infty$ and $\int_{t=0}^{\infty} g'(R(w,t))\|\nabla R(w,t)\|\,\mathrm{d}t < \infty$ for every $w \in \mathrm{clo}(\mathcal{W})$.

As an illustration on how to apply Theorem 24, assume that for F the rate for GF is $R(w,t) = \|w - w^*\|^2/2t$. For instance, we already know that such a rate holds when F is convex. For this rate, by choosing $g(z) = (1 + 1/z)^{-2}$, we get that the function $\Phi_g(w) = \int_{t=0}^{\infty} \left(1 + 2t/\|w - w^*\|^2\right)^{-2} \mathrm{d}t = \|w - w^*\|^2/2$ is an admissible potential w.r.t. F. We provide more examples in Section 5.3.

Theorem 23 and Theorem 24 are, in a sense, converse of each other. Theorem 23 shows that the existence of an admissible potential function implies a rate of convergence for GF. On the other hand, Theorem 24 shows how to construct admissible potentials starting from the fact that GF has a rate. One might wonder whether there always exist a Lyapunov function, more specifically a g function above, such that the rate implied by the constructed potential in Theorem 23 matches the rate that we started with for Theorem 24, i.e. $R(w,t) \approx g^{-1}(\Phi_g(w)/t)$. We answer this in the positive for rate functions that are of the product form.

Corollary 3. *Let $\mathcal{W} \subseteq \mathbb{R}^d$ be any set of initial points that we want to consider, and R be an admissible rate function w.r.t. all GF paths originating from points in $\mathcal{W}$. Additionally, suppose R has the product form $R(w,t) = h(w)r(t)$ where h is differentiable and r is a non-increasing function that satisfies $r(t) \leq \lambda |r'(t)| \max\{1,t\}$ for any $t \in \mathbb{R}$ (where λ is a universal constant). Furthermore, suppose that for any $w_0 \in \mathcal{W}$, the point $w(t)$ on the GF path satisfies $F(w(t)) \leq R(w_0,t)$. Then, there exists a monotonically increasing function $g : \mathbb{R}^+ \mapsto \mathbb{R}^+$ such that the potential $\Phi(w)$ constructed in Theorem 24 using g, when plugged in Theorem 23, implies that GF has the rate*

$$F(w(t)) \leq \max_{w \in \mathcal{W}} R(w, t/\log^2(t))$$

for any initialization $w(0) \in \mathcal{W}$.

5.1.1 Geometric Interpretation

The definition of an admissible potential comes with a geometric condition on the function F given in (5.4). Since Theorem 24 constructs admissible potentials, when a rate $R(w,t)$ holds for GF it suggests that the geometric property in (5.4) holds for the objective function F. As an example, say GF on F satisfies the rate $R(w,t) = F(w)e^{-t}$. From Theorem 24, we note that $\Phi_g(w) = F(w)$ is an admissible potential w.r.t F with $g(z) = z$. This implies the geometric property

$$\langle \nabla F(w), \nabla F(w) \rangle \geq F(w) \tag{5.6}$$

holds for F whenever GF has rate $R(w,t) = F(w)e^{-t}$. On the other, we know that whenever (5.6) holds the function $\Phi(w) = F(w)$ satisfies (5.4) and is thus an admissible potential for F (with $g(z) = z$), and hence Theorem 23 implies the rate of $F(w)/t$, which is equivalent to the rate $F(w)e^{-t}$ (c.f. Lemma 32). This implies

an equivalence between the rates $R(w,t) = F(w)e^{-t}$ and the geometric property (5.6). We formalize this in the following.

Proposition 5. *The following two properties are equivalent:*

(a) For any $w(0) \in \mathbb{R}^d$ and $t \geq 0$, GF has the rate $F(w(t)) \leq F(w(0))e^{-\lambda t}$,

(b) $F(w)$ satisfies the Polyak-Łojasiewicz (PL) property i.e. $\lambda F(w) \leq \|\nabla F(w)\|^2$,

for any $\lambda \geq 0$. Theorem 24 implies (b) and yields the potential function $\Phi(w) = F(w)$.

A similar equivalence also holds for the more general class of KŁ functions. We defer this result to Proposition 7 in Section 5.3.1. In the following, we show a correspondence between the rate $R(w,t) = \frac{\|w(0)-w^*\|^2 - \|w(t)-w^*\|^2}{2t}$, and linearizability—a condition that is weaker than convexity but is sufficient for the corresponding rate of convergence for GF.

Proposition 6. *The following two properties are equivalent:*

(a) For any $w(0) \in \mathbb{R}^d$ and $t \geq 0$, GF has the admissible rate $F(w(t)) \leq \lambda \frac{\|w(0)-w^*\|^2 - \|w(t)-w^*\|^2}{2t}$,

(b) $F(w)$ is linearizable w.r.t. w^* i.e. $F(w) \leq \lambda \langle \nabla F(w), w - w^* \rangle$,

for any $\lambda \geq 0$.

More generally, the equivalence between GF rates and the corresponding geometry on F can be characterized as follows.

Remark 3. *GF on F enjoys the admissible rate $R(w,t) = g^{-1}(\Phi_g(w)/t)$ if and only if F has the geometric property $\langle \nabla \Phi_g(w), \nabla F(w) \rangle \geq g(F(w))$.*

5.2 Convergence of SGD

GD can be thought of as an approximate discretization of gradient flow. Thus, for problems where GF converges with a given rate R, one may try to get convergence guarantees for GD from an initial point w_0 by bounding the distance between the GD and GF trajectories starting from w_0. This is exactly the approach taken in prior works (Gunasekar et al., 2021; Krichene et al., 2015; Wilson et al., 2021a; Su et al., 2014; Zhang et al., 2021c; Elkabetz and Cohen, 2021). However, coming up with non-vacuous bounds on the distance between corresponding GF and GD iterated is often quite challenging and requires much stronger assumptions on the underlying objective. In fact there are cases where both GF and GD converge to the same global minimum but their paths can be quite far away from each other. We take a different approach for proving convergence of GD/SGD which directly relies on the properties of corresponding potential for F. In the following theorem, we note that further assumption on top of the premise that GF has a rate are required, to even hope that GD succeeds.

Theorem 25. *For any integer $T_0 > 0$, there exists a continuously differentiable convex function F for which $\min_w F(w) = 0$ and $w^* = 0$ is the unique minimizer, such that:*

(a) $\Phi(w) = \|w\|^2/2$ is an admissible potential for F. Thus, Theorem 23 implies that for any initial point w_0, the point $w(t)$ on its GF path satisfies $F(w(t)) \leq \frac{\|w_0\|^2}{2t}$.

(b) There exists an initial point w_0 with $\|w_0\| \leq 1$ and $F(w_0) \leq 2$ such that GD fails to find an $1/10$-suboptimal solution for any step size η within $t \leq T_0$ steps.

Below we present two regularity conditions that are sufficient to show convergence of GD, given a prescribed rate for GF.

Assumption 5. There exists a monotonically increasing function $\psi : \mathbb{R}^+ \mapsto \mathbb{R}^+$ such that $\|\nabla F(w)\|^2 \leq \psi(F(w))$ for any point $w \in \mathcal{W}$.

Assumption 6. The potential function Φ is second-order differentiable, and there exists a monotonically increasing function $\rho : \mathbb{R}^+ \mapsto \mathbb{R}^+$ such that $\|\nabla^2 \Phi(w)\| \leq \rho(\Phi(w))$ at any point $w \in \mathcal{W}$.

We will refer to the above conditions on F and Φ as self-bounding regularity conditions. The following theorem provides convergence guarantees for GD when an admissible potential exists and the above assumptions are satisfies.

Theorem 26 (GD convergence guarantee)**.** *Let Φ_g be an admissible potential w.r.t. F. Assume that F satisfies Assumption 5 and Φ_g satisfies Assumption 6. Then, for any $T \geq 0$ and setting η appropriately, the point $\widehat{w}_T$ returned by GD algorithm has the convergence guarantee*[2]

$$g(F(\widehat{w}_T)) = O\big(\tfrac{1}{\sqrt{T}}\big). \tag{5.7}$$

Furthermore, if the function $\frac{\psi}{g}$ is monotonically increasing, then for a different appropriate choice of η,

$$g(F(\widehat{w}_T)) = O\big(\tfrac{1}{T}\big). \tag{5.8}$$

Let us consider an example. Suppose GF on F achieves the rate $R(w,t) = \|w - w^*\|^2/2t$. Then, $\Phi_g(w) = \|w - w^*\|^2/2$ is an admissible potential for F from Theorem 24 with $g(z) = (\epsilon^{-1/\epsilon} + 1/z)^{-1-\epsilon}$ for any $\epsilon > 0$. However, as we saw in Theorem 25 just existence of such a rate function does not imply the GD will succeed

[2]The $O(\cdot)$ notation here hides initialization and problem dependent constants fully specified in the Appendix.

and we need to make further assumptions. Notice that in this case $\Phi_g(w)$ satisfies Assumption 6 with $\rho(z) = 1$. If we further assume that F is L-Lipschitz, then Assumption 5 is satisfied with $\psi(z) = L^2$. Hence, applying Theorem 26 and taking the limit of $\epsilon \to 0$, we get that GD has convergence rate $F(\widehat{w}_T) = O(\|w - w^*\| L/\sqrt{T})$. Instead if F was H-smooth, Assumption 5 is satisfied with $\psi(z) = 4Hz$ and $\psi(z)/g(z) = 4H$ is a monotonically increasing function and thus using (5.8), we get that GD has the convergence rate $F(\widehat{w}_T) = O(H\|w - w^*\|^2/T)$. Notice that both of these rates are optimal for GD under the Lipschitz/Smoothness assumptions on F and given the fact that GF converges at the rate R starting from w (Nemirovski and Yudin, 1983a). On similar lines, using the rates for GF convergence on PL/KŁ functions, we can also recover optimal convergence rates for GD under appropriate smoothness assumptions on F. Details are deferred to the appendix.

We next consider the convergence of SGD algorithm. Recall that at the iterate w_t, SGD performs the updated using $\nabla f(w_t, z_t)$, a stochastic and unbiased estimate of $\nabla F(w_t)$. Of course, unless one has some form of control over the distribution of $\nabla f(w_t, z_t)$, one cannot hope to prove any convergence guarantees of SGD. To this end, we make the following regularity assumption on the noise in $\nabla f(w, z_t)$ while estimating $\nabla F(w)$.

Assumption 7 (Noise regularity)**.** There exists a monotonically increasing function $\chi : \mathbb{R}^+ \mapsto \mathbb{R}^+$ such that for any point w, the gradient estimate $\nabla f(w, z)$ satisfies

$$\Pr\big(\|\nabla f(w; z) - \nabla F(w)\|^2 \geq t \cdot \chi(F(w))\big) \leq e^{-t}.$$

Assumption 7 is quite general, and can be specialized by appropriately setting the function χ to model various stochastic optimization problem settings observed in practice. For example, the classical stochastic optimization setting in which

$\nabla f(w; z) = \nabla F(w) + \varepsilon_t$ where ε_t is a sub-Gaussian random variable with mean 0 and variance σ^2 is captured by the above assumption when $\chi(z) = \sigma^2$ (Nemirovski et al.). However, it turns out that for many interesting ML problems, the noise typically scales with the function value (Wojtowytsch, 2021a,b).

Theorem 27 (SGD convergence guarantee)**.** *Let Φ_g be an admissible potential w.r.t. F. Assume that F satisfies Assumption 5, Φ_g satisfies Assumption 6 and the stochastic gradient estimates $\nabla f(w; z)$ satisfy Assumption 7. Then, for any $T \geq 0$ and setting η appropriately, the point $\widehat{w}_T$ returned by SGD algorithm has the convergence guarantee*[1]

$$g(F(\widehat{w}_T)) = \widetilde{O}\big(\tfrac{1}{\sqrt{T}}\big).$$

with probability at least 0.7 *over the randomization of the algorithm and stochastic gradients.*

Remark 4. *In most classic settings, one expects a $1/\sqrt{T}$ rate for SGD Bubeck et al. (2015). However, in cases where Φ_g is an admissible potential and $g(z) = o(z)$, Theorem 27 seems to suggest a $g^{-1}(1/\sqrt{T})$ rate of convergence which is faster than $1/\sqrt{T}$. This is where the self-bounding regularity conditions play an important role. As an example for PŁ style rates, one can show that $F(w)^p$ is an admissible potential with $g(z) = z^p$ for any p. However, the self-regularity conditions are not satisfied unless $p \geq 1$. Setting $p = 1$ recovers the $1/\sqrt{T}$ rate of SGD for PŁ functions which is optimal Agarwal et al. (2009).*

5.3 Applications

So far, we have already discussed classical examples like PŁ functions, convex functions, etc. In this section, we will show how to construct and use admissible

potentials to derive convergence rates for SGD for more complex non-convex optimization problems including Kurdyka-Łojasiewicz (KŁ) functions, phase retrieval and matrix square root.

5.3.1 Kurdyka-Łojasiewicz (KŁ) functions

Kurdyka-Łojasiewicz (KŁ) functions appear in various non-convex learning settings, for instance, generalized linear models (Mei et al., 2021), low-rank matrix recovery (Bi et al., 2022), over-parameterized neural networks (Zeng et al., 2018; Allen-Zhu et al., 2019c), reinforcement learning (Agarwal et al., 2021b; Mei et al., 2020; Yuan et al., 2022) and optimal control (Bu et al., 2019; Fatkhullin and Polyak, 2021). We recall the following definition of KŁ functions, where we assumed that F_{kl} is non-negative and $\min_w F_{\mathrm{kl}}(w) = 0$.[3]

Definition 15 (KŁ functions)**.** *The objective F_{kl} satisfies Kurdyka-Łojasiewicz (KŁ) property with exponent $\theta \in (0,1)$ and coefficient $\alpha \in \mathbb{R}^+$, if for any point w,*

$$\|\nabla F_{\mathrm{kl}}(w)\|^2 \geq \alpha F_{\mathrm{kl}}(w)^{1+\theta}.$$

Note that the above KŁ property generalizes the PŁ property we considered in earlier sections; setting $\theta = 0$ results in PŁ property. We note the following rate of convergence for gradient flow for KŁ functions.

Lemma 25. *For any initial point point $w(0) = w_0$, the point $w(t)$ on its gradient flow path satisfies*

$$F_{\mathrm{kl}}(w(t)) \leq R_{\mathrm{kl}}(w_0, t) := \frac{F_{\mathrm{kl}}(w_0)}{(1 + \alpha\theta F_{\mathrm{kl}}(w_0)^{\theta} \cdot t)^{1/\theta}}.$$

Furthermore, R_{kl} is an admissible rate of convergence w.r.t. F.

[3]Various other definitions KŁ functions appear in the literature. However all of them are equivalent under the appropriate change of variables.

Plugging the above rate function in Theorem 24 with $g(z) = \alpha z^{1+\theta}$ implies that the function $\Phi_g(w) = F_{\text{kl}}(w)$ is an admissible potential function w.r.t. F_{kl}. We can thus use this potential function in Theorem 26 and Theorem 27 to provide a convergence guarantee for GD and SGD. We note that the following additional assumption that F_{kl} is H-smooth, is sufficient to derive the required self-bounding regularity conditions on F_{kl} and Φ_g.

Assumption 8. There exists an $H \in \mathbb{R}^+$ such that $\|\nabla^2 F_{\text{kl}}(w)\| \leq H$ for any w.

We now state the convergence bound for GD and SGD algorithm.

Theorem 28. *Suppose F_{kl} is K with exponent θ and coefficient α, and satisfies Assumption 8. Then, for any initial point w_0 and $T \geq 1$, setting η appropriately,*

(a) The point $\widehat{w}_T$ returned by GD algorithm satisfies $F_{\text{kl}}(\widehat{w}_T) \lesssim \left(\frac{4HF_{\text{kl}}(w_0)}{\alpha}\right)^{1/1+\theta} \cdot \frac{1}{T^{1/(2+2\theta)}}$.

(b) The point $\widehat{w}_T$ returned by SGD starting from w_0 and using stochastic gradient estimates for which Assumption 7 holds with $\chi(z) = \sigma^2$, satisfies $F_{\text{kl}}(\widehat{w}_T) \lesssim \left(\frac{BHF(w_0)}{\alpha^2 T}\right)^{1/2+2\theta}$ with probability at least 0.7.

We first observe that both GD and SGD converge at the rate of at least $O\big(1/T^{1/2+2\theta}\big)$. Furthermore, $\theta = 0$ corresponds to the function being PŁ , in which case, we can improve the rate for GD using Lemma 32 to be of the form $F_{\text{kl}}(w(t)) \leq F_{\text{kl}}(w_0)e^{-O(t)}$ which recovers the bound in Proposition 5. We also note that the classical stochastic optimization setting in which $\nabla f_{\text{kl}}(w; z) = \nabla F_{\text{kl}}(w) + \varepsilon_t$ where ε_t is a sub-Gaussian random variable with mean 0 and variance σ^2 satisfies Assumption 7. As a result we have convergence guarantees for SGD algorithm for this case. Finally, we note that similar to the results in Section 5.1.1, we have the following geometric equivalence between KŁ functions and rates for GF.

Proposition 7. *The following two properties are equivalent for any function F:*

(a) For any $w(0) \in \mathbb{R}^d$ and $t \geq 0$, GF has the admissible rate $F(w(t)) \leq \frac{F(w_0)}{\left(1+\alpha\theta F(w_0)^{\theta}\cdot t\right)^{1/\theta}}$,

(b) $F(w)$ satisfies the Kurdyka-Łojasiewicz (PL) property i.e. $\alpha F_{\mathrm{kl}}(w)^{1+\theta} \leq \|\nabla F_{\mathrm{kl}}(w)\|^2$,

for any $\alpha \geq 0$ and $\theta \in (0,1)$.

5.3.2 Phase retrieval

In the phase retrieval problem (Candes et al., 2015; Chen et al., 2019; Tan and Vershynin, 2019), we wish to reconstruct a hidden vector $w^* \in \mathbb{R}^d$ with $\|w^*\| = 1$ using phaseless observations $\mathcal{S} = \{(a_j, y_j)\}_{j \leq T}$ of the form $y_j = \langle a_j, w^* \rangle^2$ where $a_j \sim \mathcal{N}(0, \mathrm{I}_d)$. The classical approach to recover w^* is by using the per-sample loss function $f_{\mathrm{pr}}(w; (a_j, y_j)) = ((a_j^\top w)^2 - y_j)^2$ for which the corresponding population loss is given by

$$F_{\mathrm{pr}}(w) = \mathbb{E}[f_{\mathrm{pr}}(w; (a, y))] = \mathbb{E}_{a \sim \mathcal{N}(0, \mathrm{I}_d)}\Big[\big((a^\top w)^2 - (a^\top w^*)^2\big)^2\Big]. \tag{5.9}$$

F_{pr} is non-convex, and has stationary points (and local minima) that do not correspond to the global minima. In the following, we provide convergence guarantees for GD algorithm on F_{pr}, and SGD algorithms that computes stochastic gradient estimates using $\mathcal{S}$. We first note that F_{pr} satisfies self-bounding regularity conditions, and GF on F_{pr} converges to the global minimizer for any initial point w_0.

Lemma 26. *F_{pr} satisfies Assumption 5. Furthermore, for any initial point w_0, the point $w(t)$ on its gradient flow path satisfies*

$$F_{\mathrm{pr}}(w(t)) \leq \min\Big\{F_{\mathrm{pr}}(w_0), F_{\mathrm{pr}}(w_0)e^{-t+\frac{1}{\langle w_0, w^*\rangle^2}}\Big\} =: R_{\mathrm{pr}}(w(0), t).$$

Furthermore, the function R_{pr} above is an admissible rate of convergence w.r.t. F_{pr}.

The rate above follows from independently analysis the terms parallel and perpendicular components $\langle w, w^*\rangle$ and $\|w\|^2 - \langle w, w^*\rangle$ respectively. Our main tool for getting the convergence guarantee for GD / SGD is to utilize Theorem 24 to get an admissible potential w.r.t. F_{pr}, which can be plugged in Theorem 26 and 27 to get the corresponding rates.

Theorem 29. *Consider the phase retrieval objective F_{pr} given in (5.9). For any initial point w_0 and $T \geq 1$, setting η appropriately,*

(a) The point $\widehat{W}_T$ returned by GD starting from w_0 satisfies $F_{\mathrm{pr}}(\widehat{W}_T) = O\big(\min\{\frac{1}{T}, e^{-O(T-t_0)}\}\big)$ for all $T \geq t_0$, where t_0 is a w_0 dependent constant.

(b) The point $\widehat{w}_T$ returned by SGD starting from w_0 and using stochastic gradient estimates for which Assumption 7 holds, satisfies $F_{\mathrm{pr}}(\widehat{w}_T) = \widetilde{O}\Big(\frac{1}{\sqrt{T}}\Big)$ with probability at least 0.7.

The $O(\cdot)$ notation above hides w_0 dependent constants which we specify in the Appendix. Our rate for GD above matches the best known result in the literature in terms of the dependence on T (Chen et al., 2019). To the best of our knowledge, ours is also the first convergence analysis of SGD under arbitrary noise conditions satisfying Assumption 7. While this rate is optimal under certain noise conditions, e.g. when $\chi(z) = \sigma^2$, further improvements are possible when χ is favorable. For

example, suppose the stochastic gradient estimates were computed using samples from $\mathcal{S}$ by taking a fresh sample for each estimate, i.e. $\nabla f(w;(a,y)) = 4((a^\top w)^2 - y)(a^\top w)w$. In this case, the stochastic gradient satisfy Assumption 7 with $\chi(z) = \min\{\sqrt{z}, c\}$ where c is a universal constant (c.f. Candes et al. (2015, Lemma 7.4, 7.7)). While, our framework implies that this SGD algorithm (computing estimates using samples) converges at the rate of $1/\sqrt{T}$, this rate can be improved further (Chen et al., 2019), and we defer the refined analysis for future research.

5.3.3 Initialization specific rates

In many applications, GF is only known to converge from nice enough initial points that satisfy certain properties. In this section, we show how to use our tools to show convergence of GD/SGD for such problems, and consider matrix square root as an example. We first provide the following general utility lemma that shows how to construct admissible potentials when the rate for GF from w_0 holds only when w_0 satisfies a certain property characterized by $h(w_0) \geq 0$.

Lemma 27. *Let $h : \mathbb{R}^d \mapsto [0,1]$ be a continuously differentiable function, and suppose that for any point w for which $h(w) > 0$, GF with $w(0) = w$ has rate $F(w(t)) \leq R(w,t)$ where $R(w,\cdot)$ is a monotonically decreasing function in t. Furthermore, suppose that $F(w) \leq R(w,0)$, F satisfies Assumption 5, $R(w, h(w)t)$ is an admissible rate function w.r.t. F, and for any w,*

(a) *the function $\Gamma(w) := \int_{t=0}^{\infty} R(w,t)\,\mathrm{d}t$ is continuously differentiable, and $\max\{\|\nabla\Gamma(w)\|, \|\nabla^2\Gamma(w)\|\} \leq \lambda(\Gamma(w))$ where λ is a positive, monotonically increasing function.*

(b) $\max\{\|\nabla h(w)\|, \|\nabla^2 h(w)\|\} \leq \pi(\Gamma(w))$ *where π is a positive, monotonically*

increasing function.

(c) $(h(w) - h(w^*))^2 \leq \mu(\Gamma(w))$ *where* μ *is a positive, monotonically increasing function with the property that* $k\mu(z) \leq \mu(kz)$ *for any* $k \geq 1$.

Then, the function $\Phi_g(w) = \Gamma(w)/h(w)$ *is an admissible potential w.r.t.* F *with* $g(z) = z$*, and satisfies the self-bounding regularity condition in Assumption 6.*

Matrix square root

In the matrix square root problem (De Sa et al., 2015; Jain et al., 2017a), we are given a positive definite and symmetric matrix $M \in \mathbb{R}^{d\times d}$ with $\sigma_d(M) > 0$, and wish to find a symmetric $W \in \mathbb{R}^{d\times d}$ that minimizes the objective

$$F_{\text{ms}}(W) = \|M - W^2\|_F^2. \tag{5.10}$$

F_{ms} is non-convex in W, and has spurious stationary points. In the following, we provide convergence guarantees for GD/SGD algorithm on F_{ms}. We first note that F_{ms} satisfies self-bounding regularity conditions, and GF on F_{ms} converges to the global minimizer when the initial point w_0 satisfies additional assumptions. We capture these initial conditions using the function h_{ms} defined as

$$h_{\text{ms}}(W) = \sigma\big(\phi(W^2) - \alpha\big), \tag{5.11}$$

where the function $\phi(Z) := \frac{-1}{\gamma}\log(\text{tr}(e^{-\gamma Z}) + e^{-16\alpha\gamma})$, $\alpha = \sigma_{\min}(M)/1600$, $\gamma = \log(d+1)/\alpha$, and σ denotes a smoothened version of the indicator function given by $\sigma(z) = \{0 \text{ if } z \leq 0,\ \frac{2}{\alpha^2}z^2 \text{ if } 0 \leq z \leq \frac{\alpha}{2},\ -\frac{2}{\alpha^2}z^2 + \frac{4}{\alpha}z - 1 \text{ if } \frac{\alpha}{2} \leq z \leq \alpha, \text{ and } 1 \text{ if } \alpha \leq z\}$.

Lemma 28. F_{ms} *satisfies Assumption 5. Furthermore, for any initial point* W_0

for which $h_{\mathrm{ms}}(W_0) > 0$*, the point* $W(t)$ *on its GF path satisfies*

$$F_{\mathrm{ms}}(W(t)) \leq F_{\mathrm{ms}}(W_0)\exp(-16\alpha t) =: R_{\mathrm{ms}}(W(0), t),$$

where $\alpha = \sigma_{\min}(M)/1600$*,* $\gamma = \log(d+1)/\alpha$ *and the function* h_{ms} *is defined in* (5.11)*.*

The above rate follows from directly solving the PDE associated with the gradient flow on the underlying objective. Lemma 28 provides conditions on W_0 under which the GF path converges with the rate function R_{ms}. Our main tool for showing the convergence of GD / SGD is by using Lemma 27 to get admissible potentials. Note that the function h_{ms} takes values in $[0, 1]$, is continuously differentiable, and as we show in the appendix satisfies all the required self-bounding regularity conditions in Lemma 27. Thus, Lemma 27 provides an admissible potential w.r.t. F_{pr} which can be used to get the following rates.

Theorem 30. *Consider the matrix square root objective* F_{ms} *given in* (5.10)*. For any* $\kappa > 0$*, initial point* W_0 *for which* $h_{\mathrm{ms}}(W_0) > 0$ *and setting* η *appropriately,*

(a) The point $\widehat{W}_T$ *returned by GD starting from* w_0 *satisfies* $F_{\mathrm{ms}}(\widehat{W}_T) = O\big(\min\{\frac{1}{T}, e^{-O(T-t_0)}\}\big)$ *for all* $T \geq t_0$*, where* t_0 *is a* w_0 *dependent constant.*

(b) The point $\widehat{W}_T$ *returned by SGD starting from* w_0 *and using stochastic gradient estimates for which Assumption 7 holds, satisfies* $F_{\mathrm{ms}}(\widehat{W}_T) = \widetilde{O}\Big(\frac{1}{\sqrt{T}}\Big)$ *with probability at least* 0.7*.*

The $O(\cdot)$ notation above hides W_0 dependent constants which we specify in the Appendix. Our rate for GD above matches the best known result in the literature in terms of the dependence on T (Jain et al., 2017a). Ours is also the

first convergence analysis of SGD under arbitrary noise conditions satisfying Assumption 7. Note that the classical stochastic optimization setting in which $\nabla f_{\text{ms}}(w; z) = 2(W^2 - M)W + 2W(W^2 - M) + \varepsilon_t$ where ε_t is a sub-Gaussian random variable with mean 0 and variance σ^2 satisfies Assumption 7 with $\chi(z) = \sigma^2$, and as a result of Theorem 30, we get that SGD converges at the rate of $1/\sqrt{T}$. To the best of our knowledge, convergence of SGD in the stochastic optimization setting for matrix square root problem was not known before.

5.3.4 Extending results of Chatterjee (2022)

If the objective F is such that some potential Φ_g satisfies the geometric condition in (5.4) for every w, then we have a rate of convergence for GF (Theorem 23). As we saw earlier, for instance, using this machinery one can obtain rates for GF/GD/SGD when F has PŁ property everywhere. However, such global properties, that (5.4) holds for every w are often too stringent to hold in practice. In order to go beyond global assumption, in Lemma 27 we showed how to extend our tools (by defining corresponding admissible potentials) when such properties (and thus rates for GF) only hold in some region. Convergence under such local properties has also been considered before in other works Chen et al. (2019); Du et al. (2018); Jin et al. (2016a); Mohammadi et al. (2019); Vardi and Shamir (2021); Jain et al. (2017a); Ma et al. (2018a). However, all of these results usually rely on being able to choose an initialization w_0 in the good region, where the corresponding local property holds, and is close enough to the global minima that we wish to converge to. This is not always practical, and to circumvent this issue in a recent work of Chatterjee (2022), an assumption that is "local" w.r.t. initial point is provided under which one can show that GF and GD starting from this

initialization is guaranteed to converge (at an exponential rate). The interesting property of this condition is that it is local to initial point w_0 considered and does not make any global assumption on the objective.

Using the tools in this paper, this type of local property can be easily extended to more general properties than what was considered in Chatterjee (2022). For ease of presentation, we present below the result for H-smooth objective F and for GF convergence, the corresponding techniques can be easily extended show GD/SGD convergence when Assumption 5 holds. Given a function $r : \mathbb{R}^d \mapsto \mathbb{R}^+$ and a monotonically increasing positive function g, define

$$\alpha_{r,g}(w_0, \kappa) = \inf_{w:\|w-w_0\|_2 \leq \kappa, F(w) \neq 0} \frac{\nabla r(w)^\top \nabla F(w)}{g(F(w))} \tag{5.12}$$

Our main assumption on the initial point w_0 is that for some $\kappa > 0$ and some functions R and g,

$$\int_0^\infty \sqrt{g^{-1}\left(\frac{r(w_0)}{t\alpha_{r,g}(w_0, \kappa)}\right)} dt \leq \frac{\kappa}{H} \tag{5.13}$$

The next lemma shows that for any initial point w_0 that satisfies the local condition above, one has a rate of convergence for GF starting from w_0.

Lemma 29. *Suppose w_0 satisfies (5.13) for some functions R and g, and radius $\kappa = \kappa_0 > 0$. Then, gradient flow starting from $w(0) = w_0$ satisfies for any $t \geq 0$,*

$$F(w(t)) \leq g^{-1}\left(\frac{r(w_0)}{T\alpha(w_0, \kappa_0)}\right).$$

To obtain nearly matching rates for the type of condition in Chatterjee (2022), one can choose $r(w) = p \cdot F(w)^{1/p}$ and $g(z) = z^{1/p}$. Since p is arbitrary, setting $p = T\alpha(w_0, \kappa_0)/e$ we obtain nearly the same rate and the local condition as Chatterjee (2022) (upto constants). The interesting part though, is that this is for only one

choice of g and r, whereas we can get the convergence for GF when the condition holds for any g, r. In Chatterjee (2022), examples of overparmeterized deep neural nets are shown to satisfy the assumption (for the specific r and g above). With a wider choice of g and r we can extend these to more general models (eg. neural networks with milder assumptions on the activation function).

5.4 Detailed proofs

5.4.1 Preliminaries

In the following, we provide some basic definitions, probabilistic inequalities, and technical results.

$$Removethesedefinitions!$$

Definition 16 (L-Lipschitz function)**.** *A function $F : \mathbb{R}^d \mapsto \mathbb{R}$ is said to be L-Lipschitz if for any w_1, w_2, $|F(w_1) - F(w_2)| \leq L\|w_1 - w_2\|$.*

Definition 17 (H-smooth functions)**.** *A differentiable function $F : \mathbb{R}^d \mapsto \mathbb{R}$ is said to be H-Lipschitz if for any w_1, w_2,*

$$F(w_2) \leq F(w_1) + \langle \nabla F(w_1), w_2 - w_1 \rangle + \frac{H}{2}\|w_2 - w_1\|^2.$$

Definition 18 (λ-Linearizable)**.** *A function $F(w)$ is λ-Linearizable if there exists a $w^* \in \operatorname{argmin} F(w)$ such that for every point $w \in \mathbb{R}^d$,*

$$F(w) - F(w^*) \leq \lambda \langle \nabla F(w), w - w^* \rangle.$$

Lemma 30 (Azuma's inequality)**.** *Let $\{X_t\}_{t \geq 0}$ be a super-martingale sequence such that for any $t \geq 0$, $A_t \leq X_{t+1} - X_t \leq B_t$ where A_t and B_t are $\mathcal{F}_t$-measurable,*

and satisfy $|B_t - A_t| \leq c_t$. *Then, for any* $\gamma > 0$,

$$\Pr(X_t - X_0 \geq \gamma) \leq \exp\left(-\frac{\gamma^2}{2\sum_{t=1}^n c_t^2}\right).$$

The next technical lemma shows that $F(w(t))$ monotonically decreases along any GF path.

Lemma 31. *Let* w_0 *be any initial point. Then, for any* $t \geq 0$, *the point* $w(t)$ *on the GF path with* $w(0) = w_0$ *satisfies* $F(w(t)) \leq F(w(0))$.

Proof. Fix $w(0) = w_0$ and define the function $\ell(t) = F(w(t))$, where $w(t)$ is on the GF path from w_0 at time t. Using Chain rule, we note that

$$\frac{\mathrm{d}g(t)}{\mathrm{d}t} = \langle \nabla F(w(t)), \frac{\mathrm{d}w(t)}{\mathrm{d}t} \rangle = -\|\nabla F(w(t))\|^2,$$

where the last equality holds from the definition of GF in (5.3). The above implies that $g(t) = F(w(t))$ is monotonically increasing with t. □

Lemma 32. *Suppose starting from any initial point* $w(0)$ *and for any* $t \geq 0$, *the point* $w(t)$ *on the GF path satisfies*

$$F(w(t)) \leq \frac{F(w(0))}{\lambda t}.$$

Then, we have that for any $w(0)$ *and* $t \geq 1$,

$$F(w(t)) \leq F(w(0))e^{-\lfloor \lambda t/e \rfloor}.$$

.

Proof. Fix any $t \geq e$ and divide $[0, t]$ into $k = \lfloor \lambda t/e \rfloor$ many chunks of size e/λ each. Let this partition be $[0, t_1, \ldots, t_k = t]$. Clearly, we have that for any $j \leq k$,

the point $w(t_j)$ corresponds to the point at time e/λ on the GF path starting from $w(t_{j-1})$. The given rate assumption thus implies that

$$F(w(t_j)) \leq \frac{F(w(t_{j-1}))}{e}.$$

Recursing the above for j from 1 to k, we get that

$$F(w(t)) = F(w(t_k)) \leq e^{-k} F(w(0)) = F(w(0)) e^{-\lfloor \lambda t/e \rfloor}$$

. □

Lemma 33 (Lemma 2.1, Srebro et al. (2010))**.** *For any H smooth function $F : \mathbb{R}^d \mapsto \mathbb{R}$, for any $x \in \mathbb{R}^d$,*

$$\|\nabla F(x)\| \leq \sqrt{4H(F(x) - F^*)},$$

where $F^* := \min_x F(x)$,

5.4.2 Proofs from Section 5.1

Proof of Theorem 23. Let $w(s)$ be the point on the GF path after time s when starting from the point $w(0)$. An application of chain rule implies that

$$\begin{aligned}
\frac{\mathrm{d}\Phi(w(s))}{\mathrm{d}s} &= \left\langle \nabla\Phi(w(s)), \frac{\mathrm{d}w(s)}{\mathrm{d}t} \right\rangle \\
&= \langle \nabla\Phi(w(s)), -\nabla F(w(s)) \rangle \\
&\leq -g(F(w(s))),
\end{aligned}$$

where the equality in the second line holds by the update rule of GF, i.e. $\frac{\mathrm{d}w(s)}{\mathrm{d}s} = -\nabla F(w(s))$ and the last line follows by using Definition 13 where g is a monotonically increasing function that satisfies (5.4). Rearranging the terms and integrating

both the sides for s from 0 to t, we get

$$\int_{s=0}^{t} g(F(w(s)))\,\mathrm{d}s \leq -\int_{s=0}^{t} \frac{\mathrm{d}\Phi(w(s))}{\mathrm{d}s}\,\mathrm{d}s = \Phi(w(0)) - \Phi(w(s)) \leq \Phi(w(0)), \tag{5.14}$$

where the last inequality in the above holds because $\Phi(\cdot) \geq 0$ by definition.

We finally conclude by noting that $F(w(t))$ is a decreasing function of t since

$$\frac{\mathrm{d}F(w(t))}{\mathrm{d}t} = \left\langle \nabla F(w(t)), \frac{\mathrm{d}t(w)}{\mathrm{d}t} \right\rangle = -\langle \nabla F(w(t)), \nabla F(w(t)) \rangle \leq 0,$$

where the second equality above follows from GF update rule. Since g is a monotonically increasing function, the above implies that $g(F(w(t))) \leq g(F(w(s)))$ for all $s \leq t$. Using this relation in (5.14) implies that

$$g(F(w(t))) \cdot t \leq \int_{s=0}^{t} g(F(w(s)))\,\mathrm{d}s \leq \Phi(w(0)).$$

Rearranging the terms gives the desired relation. □

Proof of Theorem 24. The following proof uses the most general conditions for admissibility of R stated in Definition 14. Let $w \in \mathrm{clo}(W)$ be any initial point. Since $\int_{t=0}^{\infty} g(R(w,t))\,\mathrm{d}t < \infty$ and $\int_{t=0}^{\infty} g'(R(w,t))\|\nabla R(w,t)\|\,\mathrm{d}t < \infty$ for every $w \in \mathrm{clo}(\mathcal{W})$, the function Φ_g is well defined and is differentiable along the gradient flow path at the point w. Additionally, in the following $w(t)$ denotes the point at time t on the GF path starting from w.

First, note that because $F(w(t)) \leq R(w,t)$, and g is positive and monotonically increasing, we have

$$\begin{aligned} g(F(w)) = g(F(w(0))) &\leq g(R(w,0)) \\ &= -\int_{t=0}^{\infty} \frac{\partial g(R(w,t))}{\partial t}\,\mathrm{d}t \end{aligned}$$

$$
\begin{aligned}
&= -\int_{t=0}^{\infty} g'(R(w,t)) \frac{\partial R(w,t)}{\partial t} \, \mathrm{d}t \\
&\leq \int_{t=0}^{\infty} g'(R(w,t)) \langle \nabla R(w,t), \nabla F(w) \rangle \, \mathrm{d}t
\end{aligned}
$$

where the first equality is a tautology since $\lim_{t\to\infty} g(R(w,t)) = 0$, and the second equality follows from Chain rule. The inequality in the last line uses the property Definition 14-(b). Next, note that

$$
\begin{aligned}
\int_{t=0}^{\infty} g'(R(w,t)) \langle \nabla R(w,t), \nabla F(w) \rangle \, \mathrm{d}t &= \lim_{s\to 0^+} \int_{t=0}^{\infty} g'(R(w(s),t)) \langle \nabla R(w(s),t), \nabla F(w(s)) \rangle \, \mathrm{d}t \\
&= \lim_{s\to 0^+} \int_{t=0}^{\infty} \frac{\partial R(w(s),t)}{\partial s} \, \mathrm{d}t \\
&= \lim_{s\to 0^+} \frac{\partial}{\partial s} \int_{t=0}^{\infty} g(R(w(s),t)) \, \mathrm{d}t,
\end{aligned}
$$

where the equality in the second line above holds due to Chain rule and the last line follows from interchanging the integral and the derivative, which is permissible since we have that $\int_{t=0}^{\infty} g(R(w(s),t)) \, \mathrm{d}t < \infty$ for $w(s) \in \mathrm{clo}(W)$. Finally, note that

$$
\lim_{s\to 0^+} \frac{\partial}{\partial s} \int_{t=0}^{\infty} g(R(w(s),t)) \, \mathrm{d}t = \lim_{s\to 0^+} \frac{\partial}{\partial s} \Phi_g(w(s)) = \langle \nabla \Phi_g(w(0)), \nabla F(w(0)) \rangle
$$

where the first equality uses the definition of Φ_g and the second equality is due to Chain rule.

Combining the above chain of inequalities and plugging in $w(0) = w$ implies the desired condition,

$$
\langle \nabla \Phi_g(w), \nabla F(w) \rangle \geq g(F(w)).
$$

□

Proof. Define $H = \max_{w\in\mathcal{W}} h(w)$, and the function g as

$$
g(z) = \frac{1}{\sigma(z/H) \log^2(\sigma(z/H))},
$$

where the function σ is defined as $\sigma(x) = e + r^{-1}(x)$. Using the above g in Theorem 24, we get the potential

$$\Phi(w) = \int_{t=0}^{\infty} \frac{1}{\left(\sigma\left(\frac{h(w)}{H} r(t)\right)\right) \log^2\left(\sigma\left(\frac{h(w)}{H} r(t)\right)\right)} \, \mathrm{d}t.$$

The potential satisfies

$$\begin{aligned} \Phi(w) &\leq \int_{t=0}^{\infty} \frac{1}{(\sigma(r(t))) \log^2(\sigma(r(t)))} \, \mathrm{d}t \\ &= \int_{t=0}^{\infty} \frac{1}{(e+t) \log^2(e+t)} \, \mathrm{d}t = 1, \end{aligned} \tag{5.15}$$

where the first inequality holds because $h(w)/H \leq 1$ and since σ is inverse of r, it has to be monotonically decreasing.

In addition to the above, we also note that

$$\begin{aligned} &\int_{t=0}^{\infty} g'(R(w,t)) \|\nabla R(w,t)\| \, \mathrm{d}t \\ &\quad \leq \int_{t=0}^{\infty} \frac{3}{\sigma\left(\frac{h(w)}{H} r(t)\right)^2 \log^2\left(\sigma\left(\frac{h(w)}{H} r(t)\right)\right)} \sigma'\left(\frac{h(w)}{H} r(t)\right) \frac{\|\nabla h(w)\|}{H} r(t) \, \mathrm{d}t \\ &\quad = \int_{t=0}^{\infty} \frac{3}{\sigma\left(\frac{h(w)}{H} r(t)\right)^2 \log^2\left(\sigma\left(\frac{h(w)}{H} r(t)\right)\right)} \frac{1}{r'\left(\sigma\left(\frac{h(w)}{H} r(t)\right)\right)} \frac{\|\nabla h(w)\|}{H} r(t) \, \mathrm{d}t \\ &\quad \leq \int_{t=0}^{\infty} \frac{3}{\sigma\left(\frac{h(w)}{H} r(t)\right) \log^2\left(\sigma\left(\frac{h(w)}{H} r(t)\right)\right)} \frac{c}{r\left(\sigma\left(\frac{h(w)}{H} r(t)\right)\right)} \frac{\|\nabla h(w)\|}{H} r(t) \, \mathrm{d}t \\ &\quad \leq \frac{3c\|\nabla h(w)\|}{h(w)} \int_{t=0}^{\infty} \frac{1}{\sigma\left(\frac{h(w)}{H} r(t)\right) \log^2\left(\sigma\left(\frac{h(w)}{h(w)} r(t)\right)\right)} \, \mathrm{d}t \\ &\quad \leq \frac{3c\|\nabla h(w)\|}{H} < \infty, \end{aligned}$$

where the first inequality is from Chain rule and a trivial algebraic upper bound. The second inequality uses the relation that $r(t) \leq c|r'(t)|t$ for any $t \geq 0$. The third inequality uses the fact that r is monotonically decreasing and that σ is the inverse of r, and the last line follows similar to the bound in (5.15). Thus, g is a

valid function and Φ defined above is an admissible potential. Using Theorem 23, we get that

$$g(F(w(t))) \leq \frac{\Phi(w(0))}{t} \leq \frac{1}{t}.$$

Rearranging the terms, we get

$$\sigma\left(\frac{F(w)}{H}\right) \geq \frac{t}{\log^2(t)}.$$

Using the fact that $\sigma(x) = r^{-1}(x)$ in the above, we get that

$$F(w) \leq Hr\big(t/\log^2(t)\big).$$

□

Proof of Proposition 5. We prove the forward and reverse direction as follows:

(a) *Proof of* $(a) \Rightarrow (b)$. First note that $R(w,t) = F(w)2^{\lambda t}$ is an admissible rate function for F. Clearly, it is a decreasing function of t and $\lim_{t\to\infty} R(w,t) = 0$ for any w. Furthermore, note that for $w(t)$ on the GF path of $w(0)$, we have

$$R(w(t),0) = F(w(t)) \leq F(w(0))e^{-\lambda t} = R(w(0),t),$$

where the inequality follows from the rate assumption. Thus, R satisfies all the conditions in Definition 14. Thus, invoking Theorem 24 with $g(z) = z$, we get that

$$\Phi(w) = \int_{t=0}^{\infty} R(w,t)\,\mathrm{d}t = \int_{t=0}^{\infty} F(w)e^{-\lambda t}\,\mathrm{d}t = \frac{F(w)}{\lambda}$$

is an admissible potential for F. Thus, from (5.4), we get that

$$\frac{\|\nabla F(w)\|^2}{\lambda} = \langle \nabla\Phi(w), \nabla F(w)\rangle \geq F(w),$$

which implies the desired PŁ property.

(b) *Proof of* $(b) \Rightarrow (a)$. This follows by directly solving the corresponding differential equation along the GF path. Consider the potential function $\Phi(w) = \frac{F(w)}{\lambda}$. Note that Φ is positive, and due to the PŁ property, satisfies (5.4). Thus, Φ is an admissible potential w.r.t. F. Let $w(0)$ be the initial point for GF, we note that at the point $w(t)$ on its GF path,

$$\begin{aligned}
\frac{\mathrm{d}\Phi(w(t))}{\mathrm{d}(t)} &= \left\langle \nabla\Phi(w(t)), \frac{\mathrm{d}w(t)}{\mathrm{d}t} \right\rangle \\
&= -\langle \nabla\Phi(w(t)), \nabla F(w(t)) \rangle \\
&= -\frac{1}{\lambda}\|\nabla F(w(t))\|^2 \\
&\leq -F(w(t)),
\end{aligned}$$

where the last line follows from the PŁ property. Plugging in the definition of Φ in the above, we get

$$\frac{\mathrm{d}F(w(t))}{F(w(t))} \leq -\lambda.$$

The above differential equation in F has the following solution

$$F(w(t)) \leq F(w(0))e^{-\lambda t}.$$

Since the above holds for any $w(0)$, (a) immediately follows.

□

Proof of Proposition 6. We prove the forward and reverse direction as follows:

1. *Proof of* $(a) \Rightarrow (b)$ Since the rate is admissible, we must have that

$$\begin{aligned}
F(w) &\leq \lim_{t\to 0} R(w,t) \\
&\leq \lambda \lim_{t\to 0} \frac{\|w-w^*\|^2 - \|w(t)-w^*\|^2}{t} \\
&= \lambda\langle w-w^*, \nabla F(w)\rangle.
\end{aligned}$$

2. *Proof of* $(b) \Rightarrow (a)$. Clearly, $\Phi(w) = \lambda\|w - w^*\|/2$ is an admissible potential w.r.t. F since $\Phi(w) \geq 0$ and

$$\langle \nabla\Phi(w), \nabla F(w)\rangle = \lambda\langle \nabla F(w), w - w^*\rangle \geq F(w),$$

where the last inequality holds because F is Linearizable. Thus, from Theorem 23 we get that for any initialization $w(0)$, the point $w(t)$ on its GF path satisfies

$$F(w(t)) \leq \frac{\Phi(w(0)) - \Phi(w(t))}{t} = \lambda\frac{\|w(0) - w^*\|^2 - \|w(t) - w^*\|^2}{2t}.$$

□

5.4.3 Proofs from Section 5.2

Proof of Theorem 25. Fix any $T_0 > 0$ and set $d = (3T_0/2)^3$. Denote the variable $u = w[1 : d-1]$ and $v = w[d]$, i.e. $w = (u, v)$ and consider the function

$$F(w) = \frac{1}{2}\|u\|_{3/2}^2 + g(v),$$

where

$$\|u\|_{3/2} = \left(\sum_{i=1}^{d-1} u[i]^{3/2}\right)^{2/3} \qquad \text{and} \qquad g(v) = \begin{cases} v^2 & \text{if} \quad |v| \leq 1/2 \\ |v| - \frac{1}{4} & \text{if} \quad |v| \geq 1/2 \end{cases}.$$

Note that the $\min F(w)$ is attained at the point $w = 0$ and

$$\nabla F(w)[i] = \begin{cases} \sqrt{\|u\|_{3/2} \cdot u[i]} \cdot \text{sign}\{u[i]\} & \text{for } 1 \leq i \leq d-1 \\ \text{sign}\{v[i]\} & \text{for } i = 1 \text{ and } |v| \geq \frac{1}{2} \\ 2v[i] & \text{for } i = 1 \text{ and } |v| \leq \frac{1}{2}. \end{cases}.$$

We first argue that gradient flow converges at a rate of $O(1/t)$ for any initial point w_0. This follows from the fact that $f(w)$ is convex in w and thus $\Phi(w) = \|w\|^2/2$ is a valid potential function that satisfies for any time t,

$$\begin{aligned}\frac{\mathrm{d}\Phi(w(t))}{\mathrm{d}t} &= \langle w(t), -\nabla F(w(t))\rangle \\ &\leq -(F(w(t)) - F^*). \qquad\qquad \text{(since } F \text{ is convex)}\end{aligned}$$

Integrating on both the sides for t from 0 to T implies that:

$$\Phi(w(T)) - \Phi(w(0)) \leq -\int_{t=0}^{\infty} (F(w(t)) - F^*)\,\mathrm{d}t \leq -T(F(w(T)) - F^*),$$

where the inequality in the second line holds because the function value is non-increasing along any gradient flow path. Rearranging the terms and ignoring negative terms, implies the following rate of convergence for gradient flow:

$$F(w(T)) - F^* \leq \frac{\Phi(w_0)}{T} \leq \frac{\|w_0\|^2}{2T}.$$

Next, we argue that gradient descent algorithm given by the recursive process $w_{k+1} \leftarrow w_k - \eta\nabla F(w_k)$ fails to find a 1/10 suboptimal solution when starting from the initial point $w_0 = \left(\frac{1}{d^{2/3}}, \ldots, \frac{1}{d^{2/3}}, 1\right)$. We consider two cases of step size η below:

1. Case 1: $\eta \leq \frac{3}{d^{1/3}}$. Note that any w for which $F(w) \leq 1/10$ must satisfy that $|V| \leq 1$. However, recall that at initialization, $v = 1$. Furthermore, $\frac{\partial F(w)}{\partial v} = v$ whenever $v \in [1/2, 1]$ and thus gradient descent needs to take at least $\left\lfloor 2d^{1/3}/3 \right\rfloor$ many steps to ensure that $v \leq 1/2$.

2. Case 2: $\eta > \frac{3}{d^{1/3}}$. We argue that gradient descent diverges to infinity in this case. In particular, after k iterations of GD, the iterate $w_k = (u_k, v_k)$ satisfies

$$u_k[i] = \frac{(1 - \eta d^{1/3})^k}{d^{2/3}} \tag{5.16}$$

We prove the above via induction. The base case for $k = 0$ follows by initialization. For the induction step, note that:

$$\begin{aligned} u_{k+1}[i] &= u_k[i] - \eta \nabla F(u_k[i]) \\ &= \frac{(1-\eta d^{1/3})^k}{d^{2/3}} - \eta \text{sign}\{u_k[i]\} \cdot \frac{|1-\eta d^{1/3}|^k}{d^{1/3}} \\ &= \frac{(1-\eta d^{1/3})^{k+1}}{d^{2/3}}. \end{aligned}$$

Thus the above implies that after T iterations, we have that $F(w) \geq (\eta d^{1/3} - 1)^T$, and thus GD fails to find a 1/10 suboptimal solution for any $T \geq 1$.

Combining the two cases above, we get that in order to find a 1/10 suboptimal solution, we need $T \geq \lfloor 2d^{1/3}/3 \rfloor \geq T_0$ implying the desired lower bound. Since T_0 is arbitrary, the above construction can be extended to hold for any $T > 0$ (by setting $d = \infty$). Thus, there exists a function for which GF succeeds at the rate of $1/T$ but GD fails to converge.

We finally conclude by noting that for the function $F(w)$ and the potential $\Phi(w) = \|w^2\|/2$, we have that for any point w and w',

$$\nabla^2 \Phi(w')[\nabla F(w), \nabla F(w)] = \|\nabla F(w)\|^2 \geq \|u\|_{3/2} \|u\|_1.$$

On the gradient descent trajectory (given in (5.16)), the point u_k satisfies $\|u_k\|_1 = d^{1/3}\|u_k\|_{3/2}$ for any $k \geq 0$. Thus, we have that on the points of GD trajectory,

$$\nabla^2 \Phi(w_k')[\nabla F(w_k), \nabla F(w_k)] = \|\nabla F(w_k)\|^2 \geq d^{1/3}\|u\|_{3/2}^2 = 2d^{1/3}(F(w_k) - g(v)).$$

Note that the above proof holds for any arbitrarily large T_0. □

Supporting technical results for proofs of Theorem 26 and 27

Before delving into the proof, we first establish the following structural lemma that relates the function F and a corresponding potential Φ.

Lemma 34. *let $F(w)$ be any function that satisfies Assumption 5, and Φ be an admissible potential for F (see Definition 13). Then, there exists a monotonically increasing function $\zeta : \mathbb{R}^+ \mapsto \mathbb{R}^+$ such that for any w,*

$$F(w) \leq \zeta(\Phi(w)).$$

Proof of Lemma 34. Assumption 5 implies that for any w,

$$\|\nabla F(w)\|^2 \leq \psi(F(w))$$

for some monotonically increasing function ψ. Note that without loss of generality, we can assume that $\psi(F(w)) > 1$ as one can substitute $\psi(F(w))$ by $\psi(F(w)) + 1$ while still satisfying the above condition. The above implies that

$$g(F(w)) \cdot \frac{\|\nabla F(w)\|^2}{\psi(F(w))} \leq g(F(w)).$$

Using the relation in Definition 13, we get that the potential Φ satisfies

$$\frac{g(F(w))}{\psi(F(w))}\|\nabla F(w)\|^2 \leq g(F(w)) \leq \langle \nabla \Phi(w), \nabla F(w) \rangle. \tag{5.17}$$

We first set up additional notation. Define a function $\sigma(z) : \mathbb{R}^+ \mapsto \mathbb{R}^+$ such that $\sigma(0) := 0$ and for any z, $\sigma'(z) = g(z)/\psi(z)$, and note that σ is non-negative and monotonically increasing. We are now ready to delve into the proof. Consider any point w. Integrating along the gradient flow path starting from the point w, we get that

$$\sigma(F(w)) = \sigma(F(w(0))) = \sigma(F(w(\infty))) - \int_{t=0}^{\infty} \frac{\mathrm{d}\sigma(F(w(t)))}{\mathrm{d}t}\,\mathrm{d}t$$

$$
\begin{aligned}
&\overset{(i)}{=} \sigma(F(w(\infty))) + \int_{t=0}^{\infty} \sigma'(F(w(t)))\|\nabla F(w(t))\|^2 \,\mathrm{d}t \\
&\overset{(ii)}{=} \int_{t=0}^{\infty} \sigma'(F(w(t)))\|\nabla F(w(t))\|^2 \,\mathrm{d}t \\
&\overset{(iii)}{=} \int_{t=0}^{\infty} \frac{g(F(w(t)))}{\psi(F(w(t)))}\|\nabla F(w(t))\|^2 \,\mathrm{d}t, \qquad (5.18)
\end{aligned}
$$

where the equality in (i) follows from Chain rule and because $\frac{\mathrm{d}F(w(t))}{\mathrm{d}t} = -\|\nabla F(w(t))\|^2$, (ii) holds because of our assumption that $F(w(\infty)) = 0$ since gradient flow converges to the global minimizer and because $\sigma(0) = 0$. Finally, (iii) follows from the definition of $\sigma'(z)$.

Similarly, integrating along the gradient flow path, we also have that

$$
\begin{aligned}
\Phi(w) = \Phi(w(0)) &= \Phi(w(\infty)) - \int_{t=0}^{\infty} \frac{\mathrm{d}\Phi(w(t))}{\mathrm{d}t} \,\mathrm{d}t \\
&\overset{(i)}{=} \Phi(w(\infty)) + \int_{t=0}^{\infty} \langle \nabla\Phi(w(t)), \nabla F(w(t))\rangle \,\mathrm{d}t \\
&\overset{(ii)}{=} \int_{t=0}^{\infty} \langle \nabla\Phi(w(t)), \nabla F(w(t))\rangle \,\mathrm{d}t, \qquad (5.19)
\end{aligned}
$$

where in (i) we used Chain rule and the fact that $\nabla w(t) = -\nabla F(w(t))$ and (ii) holds because $\Phi(w(\infty)) = \Phi(w^*) = 0$ since $g(0) = 0$.

Finally, integrating (5.17) along the gradient flow path, we get the relation

$$
\int_{t=0}^{\infty} \langle \nabla\Phi(w(t)), \nabla F(w(t))\rangle \,\mathrm{d}t \geq \int_{t=0}^{\infty} \frac{g(F(w))}{\psi(F(w))}\|\nabla F(w)\|^2 \,\mathrm{d}t.
$$

Plugging the relations (5.18) and (5.19) in the above, we get

$$
\Phi(w) \geq \sigma(F(w)),
$$

which implies that

$$
F(w) \leq \zeta(\Phi(w)),
$$

where the $\zeta(z) = \sigma^{-1}(z)$ can be uniquely defined, is positive and monotonically increasing. $\square$

We next establish the following utility lemma which is an alternative to second-order Taylor's expansion and will be useful in developing convergence bounds for GD and SGD.

Lemma 35. *Let Φ be any function that satisfies Assumption 6. Define the function $\theta : \mathbb{R}^+ \mapsto \mathbb{R}^+$ such that $\theta(0) = 0$ and $\theta'(z) = 1/\rho(z)$ for any $z \geq 0$. Then, for any $u \in \mathbb{R}^d$, we have*

$$\theta(\Phi(w+u)) \leq \theta(\Phi(w)) + \frac{1}{\rho(\Phi(w))}\langle \nabla\Phi(w), u\rangle + \frac{1}{2}\|u\|^2.$$

Furthermore, at any point w,

$$\|\nabla\Phi(w)\| \leq \rho(\Phi(w))\sqrt{2\theta(\Phi(w))}.$$

Proof. Define the function

$$\ell(\alpha) := \theta(\Phi(w+\alpha u)), \tag{5.20}$$

and note that

$$\ell'(\alpha) = \frac{\mathrm{d}\ell(\alpha)}{\mathrm{d}\alpha} = \theta'(\Phi(w+\alpha u))\langle \nabla\Phi(w+\alpha u), u\rangle,$$

and

$$\begin{aligned}
\ell''(\alpha) = \frac{\mathrm{d}^2\ell(\alpha)}{\mathrm{d}\alpha^2} &= \theta''(\Phi(w+\alpha u))\langle u, \nabla\Phi(w+\alpha u)\rangle^2 + \theta'(\Phi(w+\alpha u))\left\langle \nabla^2\Phi(w+\alpha u)u, u\right\rangle \\
&\overset{(i)}{\leq} \theta'(\Phi(w+\alpha u))\left\langle \nabla^2\Phi(w+\alpha u)u, u\right\rangle \\
&\overset{(ii)}{\leq} \theta'(\Phi(w+\alpha u))\|\nabla^2\Phi(w+\alpha u)\|\|u\|^2 \\
&\overset{(iii)}{\leq} \theta'(\Phi(w+\alpha u))\rho(\Phi(w+\alpha u))\|u\|^2 \\
&\overset{(iii)}{\leq} \|u\|^2,
\end{aligned}$$

where (i) holds because $\theta''(z) = \frac{-\rho'(z)}{\rho'(z)^2} \leq 0$ as $\rho'(z) \geq 0$ since ρ is a monotonically increasing function, (ii) follows from Hölder's inequality, (iii) is due to Assumption 6 and finally (iv) is from the definition of the function θ.

Using Taylor expansion of $\ell(1)$ at the point $\alpha = 0$, we get that

$$\ell(1) \leq \ell(0) + \ell'(0) + \frac{1}{2}\ell''(\alpha'),$$

where $\alpha' \in [0, 1]$. Plugging in the values of $\ell(0)$, $\ell(1)$, $\ell'(0)$ and $\ell''(\alpha')$ from the above, we get

$$\begin{aligned}\theta(\Phi(w+u)) &\leq \theta(\Phi(w)) + \theta'(\Phi(w))\langle \nabla\Phi(w), u\rangle + \frac{1}{2}\|u\|^2 \\ &= \theta(\Phi(w)) + \frac{1}{\rho(\Phi(w))}\langle \nabla\Phi(w), u\rangle + \frac{1}{2}\|u\|^2, \end{aligned} \tag{5.21}$$

where the last line follows by using that fact that $\theta'(z) = 1/\rho(z)$. This proves the first relation.

We next prove the bound on $\|\nabla\Phi(w)\|$. Starting from (5.21), we have that for any $u \in \mathbb{R}^d$,

$$\theta(\Phi(w+u)) \leq \theta(\Phi(w)) + \frac{1}{\rho(\Phi(w))}\langle \nabla\Phi(w), u\rangle + \frac{1}{2}\|u\|^2.$$

Plugging in $u = -\frac{\nabla\Phi(w)}{\rho(\Phi(w))}$, we get

$$\theta(\Phi(w - \frac{\nabla\Phi(w)}{\rho(w)})) \leq \theta(\Phi(w)) - \frac{1}{2\rho(\Phi(w))^2}\|\nabla\Phi(w)\|^2.$$

Rearranging the terms, we get

$$\begin{aligned}\|\nabla\Phi(w)\|^2 &\leq 2\rho(\Phi(w))^2\Big(\theta(\Phi(w)) - \theta(\Phi(w - \frac{\nabla\Phi(w)}{\rho(w)}))\Big) \\ &\leq 2\rho(\Phi(w))^2\theta(\Phi(w)),\end{aligned}$$

where the inequality in the second line holds because $\theta(z) > 0$. This proves the second relation. □

Proof of Theorem 26

We are now ready to prove the convergence guarantee for GD. We first state the full version of Theorem 26 that shows all the problem dependent constants hidden in the main body. While the following bound for GD looks complex at the first sight, this is the price we pay for the generality of our framework. Various invocations of this result are presented in Section 5.3 (with the proofs in Section 5.3)

Theorem (Theorem 26 restated with problem dependent constants)**.** *Let Φ_g be an admissible potential w.r.t. F. Assume that F satisfies Assumption 5 with the bound given by the function ψ, and Φ_g satisfies Assumption 6 with the bound given by the function ρ. Then, for any initial point w_0,*

- *For any $T \geq 1$ and $\eta > 0$, the point $\widehat{w}_T$ returned by GD algorithm has the convergence guarantee*

$$g(F(\widehat{w}_T)) \leq \frac{2\theta(\Phi_g(w_0))\rho(\Phi_g(w_0))}{\eta T} + 2\eta\rho(\Phi_g(w_0))\psi(\zeta(\Phi_g(w_0))), \tag{5.22}$$

Setting $\eta = \sqrt{\frac{\theta(\Phi_g(w_0))}{\psi(\zeta(\Phi_g(w_0)))} \cdot \frac{1}{T}}$ in the above implies the rate

$$g(F(\widehat{w}_T)) \leq 4\rho(\Phi_g(w_0))\sqrt{\theta(\Phi_g(w_0))\psi(\zeta(\Phi_g(w_0)))} \cdot \frac{1}{\sqrt{T}}. \tag{5.23}$$

- *Furthermore, if the function $\frac{\psi}{g}$ is monotonically increasing, then for any $T \geq 1$ and $\eta \leq \frac{g(\zeta(\Phi_g(w_0)))}{\psi(\zeta(\Phi_g(w_0)))\cdot\rho(\Phi_g(w_0))}$, the point $\widehat{w}_T$ has the convergence guarantee*

$$g(F(\widehat{w}_T)) \leq \frac{2\theta(\Phi_g(w_0))\rho(\Phi_g(w_0))}{\eta T}. \tag{5.24}$$

Setting $\eta = \frac{g(\zeta(\Phi_g(w_0)))}{\psi(\zeta(\Phi_g(w_0)))\cdot\rho(\Phi_g(w_0))}$ in the above implies the rate

$$g(F(\widehat{w}_T)) \leq \frac{2\theta(\Phi_g(w_0))\psi(\zeta(\Phi_g(w_0)))\rho^2(\Phi_g(w_0))}{g(\zeta(\Phi_g(w_0)))} \cdot \frac{1}{T}. \tag{5.25}$$

- *Finally, if $\Phi_g = F$, then the above bounds hold with all occurrence of the term $\psi(\zeta(\Phi_g(w_0)))$ replaced with $\psi(F(w_0))$.*

In the above, the function $\theta(z) := \int_{y=0}^{z} \frac{1}{\rho(y)}\,\mathrm{d}y$ and the function ζ is defined such that $\zeta^{-1}(z) = \int_{y=0}^{z} \frac{g(y)}{\psi(y)}\,\mathrm{d}y$.

Proof of Theorem 26. For the ease of notation, we remove the subscript g from the potential Φ_g throughout the proof. Fix any $T > 0$ and let $\{w_t\}_{t=0}^{T}$ be the sequence of iterates generated by GD on $F(w)$ when starting from the point w_0 at $t = 0$. First note that for any $t \geq 0$, invoking Lemma 35 with $w = w_t$ and $u = -\eta\nabla F(w_t)$, and using Definition 13, we get

$$\begin{aligned}\theta(\Phi(w_{t+1})) &\leq \theta(\Phi(w_t)) - \frac{\eta}{\rho(\Phi(w_t))} g(F(w_t)) + \frac{\eta^2}{2}\|\nabla F(w_t)\|^2 \\ &\leq \theta(\Phi(w_t)) - \frac{\eta}{\rho(\Phi(w_t))} g(F(w_t)) + \frac{\eta^2}{2}\psi(F(w_t)), \end{aligned} \tag{5.26}$$

where θ is a monotonically increasing function and the second last line follows from Assumption 5.

We now proceed with the proof of convergence for GD. Assume that for every $t \leq T$

$$g(F(w_t)) \geq \eta\rho(\Phi(w_0))\psi(\zeta(\Phi(w_0))). \tag{5.27}$$

If the case above condition is violated, we immediately have that

$$\min_{t \leq T} g(F(w_t)) \leq \eta\rho(\Phi(w_0))\psi(\zeta(\Phi(w_0))). \tag{5.28}$$

Thus, moving forward we assume that (5.27) holds. Fix any $t \leq T$. Starting from (5.33), we get

$$\theta(\Phi(w_{t+1})) \leq \theta(\Phi(w_t)) - \frac{\eta}{\rho(\Phi(w_t))} g(F(w_t)) + \frac{\eta^2}{2}\psi(F(w_t))$$

$$\leq \theta(\Phi(w_t)) - \frac{\eta}{\rho(\Phi(w_t))} g(F(w_t)) + \frac{\eta^2}{2}\psi(\zeta(\Phi(w_t))), \tag{5.29}$$

where the last inequality is due to Lemma 34 and because Ψ is a monotonically increasing function. Before we delve into the proof of convergence of GD, we will first establish a useful property that $\Phi(w_t) \leq \Phi(w_0)$ for all $t \leq T$. We prove this via induction. For the base case ($t = 0$), starting from (5.29), we have

$$\begin{aligned}
\theta(\Phi(w_1)) &\leq \theta(\Phi(w_0)) - \frac{\eta}{\rho(\Phi(w_0))} g(F(w_0)) + \frac{\eta^2}{2}\psi(\zeta(\Phi(w_0))) \\
&\leq \theta(\Phi(w_0)) - \frac{\eta}{2\rho(\Phi(w_0))} g(F(w_0)) \\
&\leq \theta(\Phi(w_0)),
\end{aligned}$$

where the inequality in the second line above holds due to (5.27). Since θ is a monotonically increasing function, the above implies that $\Phi(w_1) \leq \Phi(w_0)$. We next prove the induction step. Assume that $\Phi(w_\tau) \leq \Phi(w_0)$ for any $\tau \leq t$. Again, using (5.29), we have

$$\begin{aligned}
\theta(\Phi(w_{t+1})) &\leq \theta(\Phi(w_t)) - \frac{\eta}{\rho(\Phi(w_t))} g(F(w_t)) + \frac{\eta^2}{2}\psi(\zeta(\Phi(w_t))) \\
&\overset{(i)}{\leq} \theta(\Phi(w_t)) - \frac{\eta}{\rho(\Phi(w_0))} g(F(w_t)) + \frac{\eta^2}{2}\psi(\zeta(\Phi(w_0))) \\
&\overset{(ii)}{\leq} \theta(\Phi(w_t)) - \frac{\eta}{2\rho(\Phi(w_0))} g(F(w_t)) \qquad (5.30) \\
&\leq \theta(\Phi(w_t)),
\end{aligned}$$

where (i) holds because $\Phi(w_t) \leq \Phi(w_0)$ via the induction hypothesis and because ρ, ζ and ψ are monotonically increasing and non-negative functions and $F(w_t) \geq 0$. (ii) is due to the relation in (5.27). Since θ is monotonic, this implies that $\Phi(w_{t+1}) \leq \Phi(w_t)$, completing the induction step and proving that $\Phi(w_t) \leq \Phi(w_0)$ for all $t \leq T$.

Since $\Phi(w_t) \leq \Phi(w)$ for all $t \leq T$, starting from (5.29) and replicating the steps

till (5.35), we get that for any $t \leq T$,

$$\theta(\Phi(w_{t+1})) \leq \theta(\Phi(w_t)) - \frac{\eta}{2\rho(\Phi(w_0))} g(F(w_t)).$$

Telescoping the above for t from 0 to $T-1$ and rearranging the terms, we get that

$$\frac{\eta}{2T\rho(\Phi(w_0))} \sum_{t=1}^{T} g(F(w_t)) \leq \frac{\theta(\Phi(w_0)) - \theta(\Phi(w_{T+1}))}{T}.$$

Ignoring negative terms on the right hand side, we get

$$\frac{1}{T} \sum_{t=1}^{T} g(F(w_t)) \leq \frac{2\theta(\Phi(w_0))\rho(\Phi(w_0))}{\eta T},$$

and thus

$$\min_{t \leq T} g(F(w_t)) \leq \frac{2\theta(\Phi(w_0))\rho(\Phi(w_0))}{\eta T}. \tag{5.31}$$

The above analysis shows that at least one of the bound in (5.28) or (5.31) holds. Thus, taking both of them together, we get that

$$\min_{t \leq T} g(F(w_t)) \leq \frac{2\theta(\Phi(w_0))\rho(\Phi(w_0))}{\eta T} + \eta\rho(\Phi(w_0))\psi(\zeta(\Phi(w_0))).$$

Improved bound when $\frac{\psi(z)}{g(z)}$ is a monotonically increasing function of z. In this case, (5.33) implies that for any $t \geq 0$,

$$\begin{aligned}\theta(\Phi(w_{t+1})) &\leq \theta(\Phi(w_t)) - \eta g(F(w_t))\left(\frac{1}{\rho(\Phi(w_t))} - \frac{\eta}{2} \cdot \frac{\psi(F(w_t))}{g(F(w_t))}\right) \\ &\leq \theta(\Phi(w_t)) - \eta g(F(w_t))\left(\frac{1}{\rho(\Phi(w_t))} - \frac{\eta}{2} \cdot \frac{\psi(\zeta(\Phi(w_t)))}{g(\zeta(\Phi(w_t)))}\right),\end{aligned} \tag{5.32}$$

where the last inequality follows from the fact that $\psi(z)/g(z)$ is an increasing function of z and from Lemma 34. In the following, we will provide a convergence guarantee for GD whenever

$$\eta \leq \frac{g(\zeta(\Phi(w_0)))}{\psi(\zeta(\Phi(w_0))) \cdot \rho(\Phi(w_0))}. \tag{5.33}$$

We first show that for such an η, the iterates produced by GD satisfy $\Phi(w_t) \leq \Phi(w_0)$ for all $t \leq T$. The proof follows by induction. For the base case ($t = 0$), starting from relation (5.34), we have

$$\begin{aligned}
\theta(\Phi(w_1)) &\leq \theta(\Phi(w_0)) - \eta g(F(w_0))\left(\frac{1}{\rho(\Phi(w_0))} - \frac{\eta}{2} \cdot \frac{\psi(\zeta(\Phi(w_0)))}{g(\zeta(\Phi(w_0)))}\right) \\
&\leq \theta(\Phi(w_0)) - \frac{\eta}{2\rho(\Phi(w_0))} g(F(w_0)) \\
&\leq \theta(\Phi(w_0)), \qquad (5.34)
\end{aligned}$$

where the inequality in the second line follows by plugging the bound on η from (5.33), and the last inequality holds since $g(F(w_0)) \geq 0$. Since θ is a monotonically increasing function, the above implies that $\Phi(w_1) \leq \Phi(w_0)$ thus proving the base case.

We next prove the induction step. Assume that $\Phi(w_\tau) \leq \Phi(w_0)$ for any $\tau \leq t$. Again, starting from relation (5.34), we have

$$\begin{aligned}
\theta(\Phi(w_{t+1})) &\leq \theta(\Phi(w_t)) - \eta g(F(w_t))\left(\frac{1}{\rho(\Phi(w_t))} - \frac{\eta}{2} \cdot \frac{\psi(F(w_t))}{g(F(w_t))}\right) \\
&\leq \theta(\Phi(w_t)) - \eta g(F(w_t))\left(\frac{1}{\rho(\Phi(w_0))} - \frac{\eta}{2} \cdot \frac{\psi(\zeta(\Phi(w_0)))}{g(\zeta(\Phi((w_0))))}\right) \\
&\leq \theta(\Phi(w_t)) - \frac{\eta}{2\rho(\Phi(w_0))} g(F(w_t)) \qquad (5.35) \\
&\leq \theta(\Phi(w_t)),
\end{aligned}$$

where the second line holds because $F(w_t) \leq \zeta(\Phi(w_t)) \leq \zeta(\Phi(w_0))$ and $\psi(z)/g(z)$ is a monotonically increasing function of z, the third line holds by plugging the bound on η from (5.33), and the last inequality holds since $F(w_0) \geq 0$. Since θ is monotonically increasing, this implies that $\theta(w_{t+1}) \leq \theta(w_t)$, completing the induction step and proving that $\Phi(w_t) \leq \Phi(w_0)$ for all $t \leq T$.

We are now ready to complete the proof of convergence of GD. Since $\Phi(w_t) \leq \Phi(w)$ for all $t \leq T$, starting from (5.34) and replicating the steps till (5.35), we get that

for any $t \leq T$,

$$\theta(\Phi(w_{t+1})) \leq \theta(\Phi(w_t)) - \frac{\eta}{2\rho(\Phi(w_0))} g(F(w_t)). \tag{5.36}$$

Telescoping the above for t from 0 to T and rearranging the terms, we get that

$$\frac{\eta}{2T\rho(\Phi(w_0))} \sum_{t=1}^{T} g(F(w_t)) \leq \frac{\theta(\Phi(w_0)) - \theta(\Phi(w_{T+1}))}{T}.$$

Ignoring negative items on the right hand side, we get

$$\frac{1}{T} \sum_{t=1}^{T} g(F(w_t)) \leq \frac{2\theta(\Phi(w_0))\rho(\Phi(w_0))}{\eta T},$$

and thus

$$\min_{t \leq T} g(F(w_t)) \leq \frac{2\theta(\Phi(w_0))\rho(\Phi(w_0))}{\eta T}.$$

□

Proof of Theorem 27

We first note the following high probability and in-expectation bounds on the norm of the stochastic gradient estimate.

Lemma 36. *Let $\{w_t\}_{t \leq T}$ be the sequence of iterates generated by SGD algorithm on F using stochastic estimates based on $\{z_t\}_{t \leq T}$. Then, with probability at least $1 - \delta$, for any time $t \leq T$,*

$$\|\nabla f(w; z)\|^2 \leq \Lambda(F(w)) \log(T/\delta)$$

and for any $w > 0$,

$$\mathbb{E}\big[\|\nabla f(w; z)\|^2\big] \leq \Lambda(F(w)),$$

where the function $\Lambda(z) := 2\psi(z) + 2\chi(z)$, and the functions ψ and χ given in Assumption 5 and 7 respectively.

Proof. Note that for any $0 \le t \le T$, with probability at least $1 - \frac{\delta}{T}$,

$$\|\nabla f(w;z) - \nabla F(w)\|^2 \le \chi(F(w)) \cdot \log\left(\frac{T}{\delta}\right),$$

which implies that

$$\begin{aligned}
\|\nabla f(w;z)\|^2 &\le 2\|\nabla F(w)\|^2 + 2\|\nabla f(w;z) - \nabla F(w)\|^2 \\
&\le 2\psi(F(w)) + 2\|\nabla f(w;z) - \nabla F(w)\|^2 \\
&\le (2\psi(F(w)) + 2\chi(F(w))) \cdot \log\left(\frac{T}{\delta}\right) \\
&= \Lambda(F(w)) \log\left(\frac{T}{\delta}\right),
\end{aligned}$$

where the inequality in the second to last line follows from Assumption 7 and the last line is from the definition of Λ. The desired bounds follows with probability at least $1 - \delta$ by taking a union bound w.r.t. t.

For the in-expectation bound, since for any random variable X, $\mathbb{E}[X] = \int_{t=0}^{\infty} \Pr(X \ge t)\,\mathrm{d}t$, we have

$$\begin{aligned}
\frac{\mathbb{E}[\|\nabla f(w;z) - \nabla F(w)\|^2]}{\chi(F(w))} &= \int_{t=0}^{\infty} \Pr\left(\frac{\mathbb{E}[\|\nabla f(w;z) - \nabla F(w)\|^2]}{\chi(F(w))} \ge t\right) \mathrm{d}t \\
&\le \int_{t=0}^{\infty} e^{-t}\,\mathrm{d}t = 1. \qquad (5.37)
\end{aligned}$$

Thus,

$$\begin{aligned}
\mathbb{E}\big[\|\nabla f(w;z)\|^2\big] &\le 2\|\nabla F(w)\|^2 + 2\,\mathbb{E}\big[\|\nabla f(w;z) - \nabla F(w)\|^2\big] \\
&\le 2\|\nabla F(w)\|^2 + 2\chi(F(w)) \\
&\le 2\psi(F(w)) + 2\chi(F(w)) =: \Lambda(F(w)),
\end{aligned}$$

where the inequality in the second line above follows (5.37) and the last line is due to Assumption 7. □

We are now ready to prove the convergence guarantee for SGD. We first state the full version of Theorem 27 that shows all the problem dependent constants hidden

in the main body, but keeps κ as a free variable. Then, we provide an easier to understand result in Remark **??** by setting κ appropriately. Various invocations of this result are presented in Section 5.3 (with the proofs in Section 5.3)

Theorem (Theorem 27 restated with problem dependent constants)**.** *Let Φ_g be an admissible potential w.r.t. F. Assume that F satisfies Assumption 5 with the bound given by the function ψ, Φ_g satisfies Assumption 6 with the bound given by the function ρ, and the stochastic gradient estimates $\nabla f(w;z)$ satisfy Assumption 7 with the bound given by the function χ. Then, for any $T \geq 1$ and $\eta \leq \frac{M-\theta(\Phi(w_0))}{20\log^2(20T)\sqrt{MBT}}$, with probability at least 0.7, the point $\widehat{w}_T$ returned by SGD algorithm satisfies for any $\kappa > 1$,*

$$g(F(\widehat{w}_T)) \leq \kappa\rho(\Phi(w_t))\left(\frac{100M}{\eta T} + 50\eta B\log^2(20T)\right).$$

where the function $\theta(z) := \int_{y=0}^{z} \frac{1}{\rho(y)}\,\mathrm{d}y$, the function ζ is defined such that $\zeta^{-1}(z) = \int_{y=0}^{z} \frac{g(y)}{\psi(y)}\,\mathrm{d}y$ and the function $\Lambda(z) := 2\psi(z) + 2\chi(z)$. Furthermore, the constant $B = \Lambda(\zeta(\rho^{-1}(\kappa\rho(\Phi(w_0)))))$ and $M = \theta(\rho^{-1}(\kappa\rho(\Phi(w_0))))$.

Remark 5. *Fix any initial point w_0 and let $\bar{w}$ be any point such that $\Phi(\bar{w}) > \Phi(w_0)$. Then, setting $\kappa = \frac{\rho(\Phi(\bar{w}))}{\rho(\Phi(w_0))}$ in Theorem 27 (above) implies that for any $T \geq 1$ and $\eta \leq \frac{\theta(\Phi(\bar{w}))-\theta(\Phi(w_0))}{20\log(20T)\sqrt{\Lambda(\zeta(\Phi(\bar{w})))\theta(\Phi(\bar{w}))\cdot T}}$, with probability at least 0.7, the point $\widehat{w}_T$ returned by SGD algorithm satisfies for any $\kappa > 1$,*

$$g(F(\widehat{w}_T)) \leq \rho(\Phi(\bar{w}))\left(50\eta\Lambda(\zeta(\Phi(\bar{w})))\log^2(20T) + \frac{100\theta(\Phi(\bar{w}))}{\eta T}\right).$$

Proof of Theorem 27. Let $\{w_t\}_{t\leq T}$ be the sequence of iterates generated by SGD algorithm in the first T times steps using the random samples $\{z_t\}_{t\leq T}$ sampled i.i.d. from an unknown distribution. Let $\mathcal{F}_t$ be the natural filtration at time t such that $\{w_j, z_j\}_{j\leq t}$ are $\mathcal{F}_t$-measurable, and let $\bar{\eta} = \frac{M-\theta(\Phi(w_0))}{20\log^2(20T)\sqrt{MBT}}$.

Part 1: Setup. For any $0 \le t \le T$, an application of Lemma 35 with $w = w_t$ and $u = -\eta \nabla f(w_t; z_t)$ implies that

$$\begin{aligned}\theta(\Phi(w_{t+1})) &= \theta(\Phi(w_t - \eta \nabla f(w_t; z_t))) \\ &\le \theta(\Phi(w_t)) - \frac{\eta}{\rho(\Phi(w_t))} \langle \nabla f(w_t; z_t), \nabla \Phi(w_t) \rangle + \frac{\eta^2}{2} \|\nabla f(w_t; z_t)\|^2.\end{aligned} \tag{5.38}$$

Taking expectation on both the sides with respect to z_t, we get

$$\begin{aligned}\mathbb{E}_t[\theta(\Phi(w_{t+1}))] &\le \theta(\Phi(w_t)) - \frac{\eta}{\rho(\Phi(w_t))} \mathbb{E}_t[\langle \nabla f(w_t; z_t), \nabla \Phi(w_t) \rangle] \\ &\qquad + \frac{\eta^2}{2} \mathbb{E}_t\big[\|\nabla f(w_t; z_t)\|^2\big] \\ &\le \theta(\Phi(w_t)) - \frac{\eta}{\rho(\Phi(w_t))} g(F(w_t)) + \frac{\eta^2}{2} \mathbb{E}_t\big[\|\nabla f(w_t; z_t)\|^2\big] \\ &\le \theta(\Phi(w_t)) - \frac{\eta}{\rho(\Phi(w_t))} g(F(w_t)) + \frac{\eta^2}{2} \Lambda(F(w_t)),\end{aligned} \tag{5.39}$$

where the inequality in the second line holds because $\mathbb{E}[\langle \nabla f(w_t; z_t), \nabla \Phi(w_t) \rangle] = \langle \nabla F(w_t), \nabla \Phi(w_t) \rangle \ge g(F(w_t))$ since w_t is independent of z_t, and the last line follows from Lemma 36. Rearranging the terms and summing for t from 0 to $T-1$, we get that

$$\sum_{t=0}^{T-1} \frac{\eta}{\rho(\Phi(w_t))} g(F(w_t)) \le \sum_{t=0}^{T-1} \left(\theta(\Phi(w_t)) - \mathbb{E}_t[\theta(\Phi(w_{t+1}))] + \frac{\eta^2}{2} \Lambda(F(w_t)) \right). \tag{5.40}$$

Our focus in the next section of the proof will be to control the term on the left hand size above.

Part 2: Lower bound on $\boldsymbol{\rho(\Phi(w_t))}$. We first set up additional notation and derive some supporting results. Consider the stochastic process $\{Y_t\}_{t \le T}$ defined as

$$Y_t = \begin{cases} \theta(\Phi(w_t)) + \sum_{j=0}^{t-1} \left(\frac{\eta}{\rho(\Phi(w_j))} g(F(w_j)) - \frac{\eta^2 \Lambda(F(w_j))}{2} \right) & \text{if } t \le \tau \\ Y_\tau & \text{if } t > \tau \end{cases}, \tag{5.41}$$

where τ is defined as the first time smaller than or equal to T at which

$$\tau = \inf\{t \leq T \mid \rho(\Phi(w_t)) > \kappa\rho(\Phi(w_0))\}, \tag{5.42}$$

where $\kappa > 1$ and will be set later. If there is no such τ for which (5.42) holds, we set $\tau = T$. Essentially, $\{Y_t\}_{t\leq T}$ is a stochastic process where Y_t depends on the random variable w_t, and is stopped as soon as $\rho(\Phi(w_t)) > \kappa\rho(\Phi(w_0))$. To keep the current proof concise, we show in Lemma 37 (below) that the process $\{Y_t\}_{t\geq 0}$ is a super-martingale with respect to the filtration $\mathcal{F}_t$, and that with probability at least 0.95, for all $t \leq T$,

$$Y_t - Y_0 \leq \sqrt{\frac{1}{2}\sum_{j=0}^{t-1}\Big(5\eta\sqrt{M}\cdot\|\nabla f(w_j;z_j)\| + 4\eta^2\|\nabla f(w_j;z_j)\|^2\Big)^2 \log(20T)}. \tag{$\mathscr{E}_1$}$$

where $M = \theta(\rho^{-1}(\kappa\rho(\Phi(w_0))))$. We additionally also note that from Lemma 36, with probability at least 0.95, for all $t \leq T$,

$$\|\nabla f(w_t;z_t)\|^2 \leq \Lambda(F(w_t))\log(20T) \tag{$\mathscr{E}_2$}$$

Taking a union bound over the events $\mathscr{E}_1$ and $\mathscr{E}_2$ above, we get that for any $t \leq T$,

$$Y_t - Y_0 \leq \sqrt{\frac{1}{2}\sum_{j=0}^{t-1}\left(5\eta\sqrt{M\cdot\Lambda(F(w_j))} + 4\eta^2\Lambda(F(w_j))\right)^2 \log^3(20T)}. \tag{$\mathscr{E}_3$}$$

In the following, we show that under the event $\mathscr{E}_3$, the condition in (5.42) never occurs. Suppose the contrary is true and that (5.42) occurs for some $\tau \leq T$. Then, we have that

$$\begin{aligned} Y_\tau - Y_0 &\leq \sqrt{\frac{1}{2}\sum_{j=0}^{\tau-1}\left(5\eta\sqrt{M\cdot\Lambda(F(w_j))} + 4\eta^2\Lambda(F(w_j))\right)\log^3(20T)} \\ &\leq \sqrt{\frac{\tau}{2}\Big(5\eta\sqrt{MB} + 4\eta^2 B\Big)^2 \log^3(20T)} \\ &\leq 9\eta\sqrt{MB}\log^2(20T)\cdot\sqrt{\tau} \end{aligned} \tag{5.43}$$

where the last line holds because $\eta \leq \bar{\eta} \leq \sqrt{M/B}$ and in the second to last line, we used the fact that

$$\Lambda(F(w_j)) \overset{(i)}{\leq} \Lambda(\zeta(\Phi(w_j))) \overset{(ii)}{\leq} \Lambda(\zeta(\rho^{-1}(\kappa\rho(\Phi(w_0))))) =: B, \tag{5.44}$$

where (i) holds due to Lemma 34 and (ii) follows from the fact that $\rho(\Phi(w_j)) \leq \kappa\rho(\Phi(w_0))$ for all $j < \tau$. However, from the definition of Y_t, we also have that

$$\begin{aligned}
Y_\tau - Y_0 &= \theta(\Phi(w_\tau)) - \theta(\Phi(w_0)) + \sum_{j=0}^{\tau-1}\left(\frac{\eta}{\rho(\Phi(w_j))}g(F(w_j)) - \frac{\eta^2\Lambda(F(w_j))}{2}\right) \\
&\geq \theta(\Phi(w_\tau)) - \theta(\Phi(w_0)) - \sum_{j=0}^{\tau-1}\frac{\eta^2\Lambda(F(w_j))}{2} \\
&\overset{(i)}{\geq} M - \theta(\Phi(w_0)) - \sum_{j=0}^{\tau-1}\frac{\eta^2\Lambda(F(w_j))}{2} \\
&\overset{(ii)}{\geq} M - \theta(\Phi(w_0)) - \frac{\eta^2\tau B}{2} \\
&\geq \frac{M - \theta(\Phi(w_0))}{2}
\end{aligned} \tag{5.45}$$

where in (i), we used the fact that $\Phi(w_\tau) > \rho^{-1}(\kappa\rho(\Phi(w_0))) = M$, (ii) follows by noting the bound in (5.44) for any $j < \tau$. The last line follows from the fact that $\eta \leq \bar{\eta} \leq \sqrt{(M - \theta(\Phi(w_0))/BT}$. However, note that this leads to a contradiction as both (5.43) and (5.45) can not be simultaneously true when when $\eta \leq \bar{\eta} = \frac{M-\theta(\Phi(w_0))}{20\log^2(20T)\sqrt{MBT}}$. Thus, we must have that with probability at least 0.9, for any $t \leq T$,

$$\rho(\Phi(w_t)) \leq \kappa\rho(\Phi(w_0)) \tag{5.46}$$

In the following, we condition on the fact that (5.46) holds, and provide a convergence guarantee for SGD.

Part 3: Convergence guarantee. The following proof conditions on the events $\mathscr{E}_1$, $\mathscr{E}_2$, $\mathscr{E}_3$. First note that, telescoping (5.38) from $t = 0$ to $T - 1$ and ignoring

negative terms in the right hand side, we get that

$$\eta \sum_{t=0}^{T-1} \frac{\langle \nabla f(w_t; z_t), \nabla \Phi(w_t) \rangle}{\rho(\Phi(w_t))} \leq \theta(\Phi(w_0)) + \frac{\eta^2}{2} \sum_{t=0}^{T-1} \|\nabla f(w_t; z_t)\|^2. \tag{5.47}$$

The left hand side above can be controlled using Azuma-Hoeffding's inequality (Lemma 30), which implies that with probability at least 0.95,

$$\begin{aligned}
&\sum_{t=0}^{T-1} \frac{\langle \nabla f(w_t; z_t), \nabla \Phi(w_t) \rangle}{\rho(\Phi(w_t))} \\
&\quad \geq \sum_{t=0}^{T-1} \mathbb{E}\left[\frac{\langle \nabla f(w_t; z_t), \nabla \Phi(w_t) \rangle}{\rho(\Phi(w_t))}\right] - 2 \max_{t<T} \frac{\langle \nabla f(w_t; z_t), \nabla \Phi(w_t) \rangle}{\rho(\Phi(w_t))} \sqrt{T \log(20)} \\
&\quad \overset{(i)}{=} \sum_{t=0}^{T-1} \mathbb{E}\left[\frac{\langle \nabla F(w_t), \nabla \Phi(w_t) \rangle}{\rho(\Phi(w_t))}\right] - 2 \max_{t<T} \frac{\|\nabla f(w_t; z_t)\| \|\nabla \Phi(w_t)\|}{\rho(\Phi(w_t))} \sqrt{T \log(20)} \\
&\quad \overset{(ii)}{\geq} \sum_{t=0}^{T-1} \mathbb{E}\left[\frac{g(F(w_t))}{\rho(\Phi(w_t))}\right] - 2 \max_{t<T} \sqrt{2\theta(\Phi(w_t))} \|\nabla f(w_t; z_t)\| \sqrt{T \log(20)}
\end{aligned}$$

where (i) above holds due to linearity of expectation w.r.t. z_t and the inner product, and using Cauchy-Schwarz inequality. The inequality in (ii) holds because of the relation (5.4) and Lemma 35.

Plugging the above bound in (5.47) and rearranging the terms, we get

$$\begin{aligned}
\eta \sum_{t=0}^{T-1} \mathbb{E}\left[\frac{g(F(w_t))}{\rho(\Phi(w_t))}\right] \leq \theta(\Phi(w_0)) + \frac{\eta^2}{2} \sum_{t=0}^{T-1} \|\nabla f(w_t; z_t)\|^2 \\
+ 2\eta \max_{t<T} \sqrt{2\theta(\Phi(w_t))} \|\nabla f(w_t; z_t)\| \sqrt{T \log(20)}.
\end{aligned}$$

An application of Markov's inequality in the above implies that with probability at least 0.9,

$$\begin{aligned}
\eta \sum_{t=0}^{T-1} \frac{g(F(w_t))}{\rho(\Phi(w_t))} &\leq 10\eta \sum_{t=0}^{T-1} \mathbb{E}\left[\frac{g(F(w_t))}{\rho(\Phi(w_t))}\right] \\
&\leq 10\theta(\Phi(w_0)) + 5\eta^2 \sum_{t=0}^{T-1} \|\nabla f(w_t; z_t)\|^2
\end{aligned}$$

$$+ 20\eta \max_{t<T} \sqrt{2\theta(\Phi(w_t))}\|\nabla f(w_t; z_t)\| \sqrt{T \log(20)}. \tag{$\mathscr{E}_4$}$$

Conditioning on the event $\mathscr{E}_2$ and plugging in the corresponding bound on $\|\nabla f(w_t; z_t)\|^2$, and dividing both the sides by η, we get that

$$\begin{aligned}
\sum_{t=0}^{T-1} \frac{g(F(w_t))}{\rho(\Phi(w_t))} &\leq \frac{10\theta(\Phi(w_0))}{\eta} + 5\eta \sum_{t=0}^{T-1} \Lambda(F(w_t)) \log(20T) \\
&\qquad + 20 \max_{t<T} \sqrt{2\theta(\Phi(w_t))\Lambda(F(w_t))T \log^2(20T)} \\
&\leq \frac{10\theta(\Phi(w_0))}{\eta} + 5\eta \sum_{t=0}^{T-1} \Lambda(\zeta(\Phi(w_t))) \log(20T) \\
&\qquad + 20 \max_{t<T} \sqrt{2\theta(\Phi(w_t))\Lambda(\zeta(\Phi((w_t)))T \log^2(20T)} \\
&\leq \frac{10M}{\eta} + 5\eta BT \log(20T) + 20\sqrt{2MBT \log^2(20T)},
\end{aligned}$$

where the second line above holds because of Lemma 34 and because Λ is monotonically increasing. The inequality in the last line follows from plugging in the bound (5.46) which implies that $\Lambda(\zeta(\Phi(w_t))) \leq \Lambda(\zeta(\rho^{-1}(\kappa\rho(\Phi(w_0))))) = B$, and $\theta(\Phi(w_t)) \leq \theta(\rho^{-1}(\kappa\rho(\Phi(w_0)))) = M$ since both Λ and ζ are monotonically increasing functions. Using (5.46) in the LHS above, rearranging the terms and dividing both the sides by T, we get that

$$\begin{aligned}
\frac{1}{T}\sum_{t=0}^{T-1} g(F(w_t)) &\leq \kappa\rho(\Phi(w_t)) \left(\frac{10M}{\eta T} + 5\eta B \log(20T) + 20\sqrt{\frac{2MB \log^2(20T)}{T}} \right) \\
&\leq \kappa\rho(\Phi(w_t)) \left(\frac{100M}{\eta T} + 50\eta B \log^2(20T) \right),
\end{aligned}$$

where the last line is by applying AM-GM inequality on the last term.

Accounting for the union bounds for events $\mathscr{E}_1$, $\mathscr{E}_2$, $\mathscr{E}_3$ and $\mathscr{E}_4$, we get that the above bound on the rate of convergence of GD holds with probability at least 0.7.

□

The following technical result is used in the proof of Theorem 27.

Lemma 37. *Suppose the premise of Theorem 27 holds, and let* $\{w_t\}_{t\leq T}$ *be the sequence of iterates generated by SGD algorithm on* F *using stochastic estimates based on* $\{z_t\}_{t\leq T}$*. Let the process* $\{Y_t\}_{t\geq 0}$ *be defined as*

$$Y_t = \begin{cases} \theta(\Phi(w_t)) + \sum_{j=0}^{t-1}\left(\frac{\eta}{\rho(\Phi(w_j))}g(F(w_j)) - \frac{\eta^2\Lambda(F(w_j))}{2}\right) & \text{if } t \leq \tau \\ Y_\tau & \text{if } t > \tau \end{cases}, \tag{5.48}$$

where $\tau = \min\{T, \inf\{t \mid \rho(\Phi(w_t)) > \kappa\rho(\Phi(w_0))\}\}$ *and* $\Lambda(z) = 2\psi(F(w)) + 2\chi(F(w))$ *where the function* ψ *and* χ *given in Assumption 5 and 7 respectively. Then,* $\{Y_t\}_{t\geq 0}$ *is a super-martingale. Furthermore, with probability at-least* 0.95*, for all* $t \leq T$*,*

$$Y_t - Y_0 \leq \sqrt{\frac{1}{2}\sum_{j=0}^{t-1}\left(5\eta\sqrt{M}\cdot\|\nabla f(w_j;z_j)\| + 4\eta^2\|\nabla f(w_j;z_j)\|^2\right)\log(20T)},$$

where $M = \theta(\rho^{-1}(\kappa\rho(\Phi(w_0))))$*.*

Proof. Let $\mathcal{F}_t$ be the natural filtration at time t such that $\{w_j, z_j\}_{j\leq t}$ are $\mathcal{F}_t$-measurable. For any $t \geq 0$, repeating the steps till (5.39) in the proof of Theorem 27 above we get that

$$\mathbb{E}_t[\theta(\Phi(w_{t+1}))] \leq \theta(\Phi(w_t)) - \frac{\eta}{\rho(\Phi(w_t))}g(F(w_t)) + \frac{\eta^2\Lambda(F(w_t))}{2}, \tag{5.49}$$

where $\mathbb{E}_t$ denotes expectation w.r.t. the random variable z_t, and conditioning on $\mathcal{F}_{t-1}$. We first show that the process $\{Y_t\}_{t\geq 0}$ is a super-martingale. Note that for any time $t \leq \tau$,

$$\begin{aligned}\mathbb{E}_t[Y_{t+1}] &= \mathbb{E}_t[\theta(\Phi(w_{t+1}))] + \sum_{j=0}^{t}\left(\frac{\eta}{\rho(\Phi(w_j))}g(F(w_j)) - \frac{\eta^2\Lambda(F(w_j))}{2}\right) \\ &\leq \theta(\Phi(w_t)) + \sum_{j=0}^{t-1}\left(\frac{\eta}{\rho(\Phi(w_j))}g(F(w_j)) - \frac{\eta^2\Lambda(F(w_j))}{2}\right) = Y_t,\end{aligned}$$

where the inequality in the second line above follows from (5.49). When $t > \tau$, by definition we have that $\mathbb{E}_t[Y_{t+1}] = Y_t$. Hence, the process $\{Y_t\}_{t\geq 0}$ is a supermartingale.

Bound on the difference sequence. There are two cases, either (a) $t > \tau$, or (b) $t \leq \tau$. In the first case, $|Y_{t+1} - Y_t| = 0$. In the following, we provide a bound on the difference sequence for $t \leq \tau$. First note that

$$Y_{t+1} - Y_t = \theta(\Phi(w_{t+1})) - \theta(\Phi(w_t)) + \underbrace{\frac{\eta}{\rho(\Phi(w_t))} g(F(w_t)) - \frac{\eta^2 \Lambda(F(w_t))}{2}}_{:=C_t}. \quad (5.50)$$

Note that the term C_t is $\mathcal{F}_t$-predictable. Thus, we just need to find $\mathcal{F}_t$-measurable processes A'_t and B'_t such that

$$A'_t \leq \theta(\Phi(w_{t+1})) - \theta(\Phi(w_t)) \leq B'_t.$$

Recall that an application of Lemma 35 with $w = w_t$ and $u = -\eta \nabla f(w_t; z_t)$ implies that

$$\begin{aligned}
\theta(\Phi(w_{t+1})) - \theta(\Phi(w_t)) &\leq -\frac{\eta}{\rho(\Phi(w_t))} \langle \nabla f(w_t; z_t), \nabla \Phi(w_t) \rangle + \frac{\eta^2}{2} \|\nabla f(w_t; z_t)\|^2 \\
&\overset{(i)}{\leq} \frac{\eta}{\rho(\Phi(w_t))} \|\nabla f(w_t; z_t)\| \|\nabla \Phi(w_t)\| + \frac{\eta^2}{2} \|\nabla f(w_t; z_t)\|^2 \\
&\overset{(ii)}{\leq} \underbrace{\eta \sqrt{2\theta(\Phi(w_t))} \|\nabla f(w_t; z_t)\| + \frac{\eta^2}{2} \|\nabla f(w_t; z_t)\|^2}_{=:B'_t}, \quad (5.51)
\end{aligned}$$

where (i) above follows from Cauchy-Schwarz inequality, and (ii) holds due to Lemma 35. Note that B'_t defined to be the terms on the RHS above is $\mathcal{F}_t$-measurable.

We next consider the lower bound on $\theta(\Phi(w_{t+1})) - \theta(\Phi(w_t))$. Plugging in $w = w_{t+1}$ and $u = \eta \nabla f(w_t; z_t)$ in Lemma 35, we get that

$$\theta(\Phi(w_t)) = \theta(\Phi(w_{t+1} + \eta \nabla f(w_t; z_t)))$$

$$\leq \theta(\Phi(w_{t+1})) + \frac{\eta}{\rho(\phi(w_{t+1}))}\langle \nabla\Phi(w_{t+1}), \nabla f(w_t; z_t)\rangle + \frac{\eta^2}{2}\|\nabla f(w_t; z_t)\|^2,$$

rearranging the terms gives us

$$\begin{aligned}
\theta(\Phi(w_{t+1})) - \theta(\Phi(w_t)) &\geq -\frac{\eta}{\rho(\phi(w_{t+1}))}\langle \nabla\Phi(w_{t+1}), \nabla f(w_t; z_t)\rangle - \frac{\eta^2}{2}\|\nabla f(w_t; z_t)\|^2 \\
&\overset{(i)}{\geq} -\frac{\eta}{\rho(\phi(w_{t+1}))}\|\nabla\Phi(w_{t+1})\|\|\nabla f(w_t; z_t)\| - \frac{\eta^2}{2}\|\nabla f(w_t; z_t)\|^2 \\
&\overset{(ii)}{\geq} -\eta\sqrt{2\theta(\Phi(w_{t+1}))} \cdot \|\nabla f(w_t; z_t)\| - \frac{\eta^2}{2}\|\nabla f(w_t; z_t)\|^2 \\
&= -\eta\sqrt{2\theta(\Phi(w_{t+1}) - \theta(\Phi(w_t)) + \theta(\Phi(w_t)))} \cdot \|\nabla f(w_t; z_t)\| \\
&\qquad - \frac{\eta^2}{2}\|\nabla f(w_t; z_t)\|^2 \\
&\overset{(iii)}{\geq} -\eta\sqrt{2|\theta(\Phi(w_{t+1}) - \theta(\Phi(w_t)))|} \cdot \|\nabla f(w_t; z_t)\| \\
&\qquad - \eta\sqrt{2\theta(\Phi(w_t))} \cdot \|\nabla f(w_t; z_t)\| - \frac{\eta^2}{2}\|\nabla f(w_t; z_t)\|^2 \\
&\overset{(iv)}{\geq} -\frac{|\theta(\Phi(w_{t+1}) - \theta(\Phi(w_t))|}{2} - \eta\sqrt{2\theta(\Phi(w_t))} \cdot \|\nabla f(w_t; z_t)\| \\
&\qquad - \frac{3\eta^2}{2}\|\nabla f(w_t; z_t)\|^2
\end{aligned}$$

where (i) follows from Cauchy-Schwarz inequality, and (ii) holds due to Lemma 35. Inequality (iii) follows from subadditivity of sq-root. Finally, (iv) follows from an application of AM-GM inequality. Rearranging the terms, we get

$$\theta(\Phi(w_{t+1})) - \theta(\Phi(w_t)) \geq \underbrace{-2\eta\sqrt{2\theta(\Phi(w_t))} \cdot \|\nabla f(w_t; z_t)\| - 3\eta^2\|\nabla f(w_t; z_t)\|^2}_{=:A'_t}. \tag{5.52}$$

Note that A'_t, defined to be the terms on the RHS above, is $\mathcal{F}_t$-measurable.

The bounds in (5.51) and (5.52) imply that the processes $\{A'_t\}_{t\geq 0}$ and $\{B'_t\}_{t\geq 0}$ are $\mathcal{F}_t$-measurable and satisfy

$$A'_t \leq \theta(\Phi(w_{t+1})) - \theta(\Phi(w_t)) \leq B'_t$$

for any $t \geq 0$. Plugging this in (5.50), we get

$$A_t := A'_t + C_t \leq Y_{t+1} - Y_t \leq B'_t + C_t =: B_t.$$

Clearly both A_t and B_t are $\mathcal{F}_t$-measurable and satisfy

$$\begin{aligned} |B_t - A_t| &\leq 5\eta\sqrt{\theta(\Phi(w_t))} \cdot \|\nabla f(w_t; z_t)\| + 4\eta^2 \|\nabla f(w_t; z_t)\|^2 \\ &\leq 5\eta\sqrt{M} \cdot \|\nabla f(w_t; z_t)\| + 4\eta^2 \|\nabla f(w_t; z_t)\|^2, \end{aligned}$$

where the last line follow from the fact that $t \leq \tau$ and thus $\Phi(w_t) \leq \rho^{-1}(\kappa\rho(\Phi(w_0)))$ which implies that $\theta(\Phi(w_t)) \leq \theta(\rho^{-1}(\kappa\rho(\Phi(w_0)))) =: M$ since θ is a monotonically increasing function.

High probability bound. An application of Azuma's inequality (Lemma 30) implies that for any $t \geq 0$, with probability at least $1 - 1/20T$,

$$Y_t - Y_0 \leq \sqrt{\frac{1}{2}\sum_{j=0}^{t-1}\Big(5\eta\sqrt{M} \cdot \|\nabla f(w_j; z_j)\| + 4\eta^2 \|\nabla f(w_j; z_j)\|^2\Big)^2 \log(20T)}.$$

The desired statement follows by taking a union bound in the above for t from 0 to $T - 1$. □

5.4.4 Kurdyka-Łojasiewicz (KŁ) functions

We recall the following definition of KŁ functions, where we assumed that F is non-negative and $\min_w F(w) = 0$.

Definition 19 (KŁ functions)**.** *The objective F satisfies Kurdyka-Łojasiewicz (KŁ) property with exponent $\theta \in (0, 1)$ and coefficient $\alpha \in \mathbb{R}^+$, if for any point w,*

$$\|\nabla F(w)\|^2 \geq \alpha F(w)^{1+\theta}.$$

In the following, we will provide convergence guarantees for KŁ functions that are H-smooth (c.f. Assumption 8).

Rate of convergence for gradient flow

The next lemma provides an admissible rate of convergence for KŁ function.

Lemma 38. *Suppose F is KŁ with exponent $\gamma \in (0, 1/2)$ (Definition 19). Then, for any initial point point $w(0) = w_0$, the point $w(t)$ on its gradient flow path satisfies*

$$F(w(t)) \leq R(w_0, t) := \frac{F(w_0)}{(1 + \alpha\theta F(w_0)^\theta \cdot t)^{1/\theta}}.$$

Furthermore, R is an admissible rate of convergence w.r.t. F.

Proof. Note that

$$\begin{aligned}\frac{\mathrm{d}F(w(t))}{\mathrm{d}t} &= \langle \nabla F(w(t)), \frac{\mathrm{d}w(t)}{\mathrm{d}t} \rangle \\ &= -\|\nabla F(w(t))\|^2 \\ &\leq -\alpha F(w(t))^{1+\theta}.\end{aligned}$$

Rearranging the terms above implies the differential equation

$$\frac{\mathrm{d}F(w(t))}{F(w(t))^{1+\theta}} \leq -\alpha \, \mathrm{d}t,$$

solving which for $\theta \in (0, 1)$ gives the bound

$$F(w(t)) \leq \frac{F(w(0))}{(1 + \alpha\theta t \cdot F(w(0))^\theta)^{1/\theta}}$$

The desired statement following by plugging in $w(0) = w_0$ and defining

$$R(w, t) := \frac{F(w)}{(1 + \alpha\theta t \cdot F(w)^\theta)^{1/\theta}}$$

We next show that the above function R is an admissible rate of convergence w.r.t. F. Recall that a sufficient conditions for admissibility of R is that for any point w,

$$\int_{t=0}^{\infty}\Big(\frac{\partial R(w,t)}{\partial t} + \langle \nabla R(w,t), \nabla F(w)\rangle\Big)\,\mathrm{d}t \geq 0. \tag{5.53}$$

Note that

$$\int_{t=0}^{\infty}\frac{\partial R(w,t)}{\partial t}\,\mathrm{d}t = -F(w),$$

and

$$\begin{aligned}\int_{t=0}^{\infty}\langle \nabla R(w,t), \nabla F(w)\rangle &= \|\nabla F(w)\|^2 \int_{t=0}^{\infty}\frac{1}{(1+\alpha\theta t\cdot F(w)^{\theta})^{\frac{1}{\theta}}}\,\mathrm{d}t \\ &\qquad - \alpha\theta F(w)^{\theta}\|\nabla F(w)\|^2\int_{t=0}^{\infty}\frac{t}{(1+\alpha\theta t\cdot F(w)^{\theta})^{1+\frac{1}{\theta}}}\,\mathrm{d}t \\ &= \frac{\|\nabla F(w)\|^2}{(1-\theta)\alpha F(w)^{\theta}} - \frac{\theta\|\nabla F(w)\|^2}{(1-\theta)\alpha F(w)^{\theta}} \\ &= \frac{\|\nabla F(w)\|^2}{\alpha F(w)^{\theta}}\end{aligned}$$

Combining the two bounds together implies that a sufficient condition for R to be admissible is that

$$\frac{\|\nabla F(w)\|^2}{\alpha F(w)^{\theta}} \geq F(w).$$

Since F is KŁ with exponent θ and coefficient α, the above holds true for any w, thus implying that R is an admissible rate function. □

Potential function and self-bounding regularity conditions

Consider the function

$$R(w,t) := \frac{F(w)}{(1+\alpha\theta t\cdot F(w)^{\theta})^{1/\theta}}$$

Lemma 38 implies that R is an admissible rate of convergence for any KŁ objective function F. Thus, using Theorem 24 with $g(z) = \alpha z^{1+\theta}$, we get that the function Φ_g constructed in the following is an admissible potential function for F,

$$\begin{aligned}\Phi_g(w) &= \int_{t=0}^{\infty} g(R(w,t))\,\mathrm{d}t \\ &= \alpha \int_{t=0}^{\infty} \frac{F(w)^{1+\theta}}{(1+\alpha\theta t \cdot F(w)^{\theta})^{\frac{1}{\theta}+1}}\,\mathrm{d}t \\ &= F(w). \end{aligned} \tag{5.54}$$

Note that we already assumed self-bounding regularity conditions on F in Assumption 8. In the following, we derive self-bounding regularity conditions for the potential Φ_g.

Lemma 39. *Suppose that F satisfies Assumption 8. Then, for any point w, the potential function Φ_g in (5.54) satisfies that*

$$\|\nabla^2 \Phi_g(w)\| \leq \psi(\Phi_g(w)),$$

where ψ is the positive, monotonically increasing function given in Assumption 8.

Proof. From the definition of Φ_g, we have that $\|\nabla^2 \Phi_g(w)\| = \|\nabla^2 \Phi_g(w)\|$. The desired self-bounding regularity conditions on Φ_g thus follows from Assumption 8.

□

We next prove Proposition 7.

Proof of Proposition 7. The proof of $(b) \Rightarrow (a)$ follows from Lemma 38. For the proof of $(a) \Rightarrow (b)$, we note that plugging the given rate in Theorem 24, we get

that the function $\Phi_g(w) = F(w)$ is an admissible potential function w.r.t. $F(w)$ with $g(z) = \alpha z^{1+\theta}$. Thus, from (5.4), we get that

$$\|\nabla F(w)\|^2 = \langle \nabla \Phi_g(w), F(w) \rangle \geq g(F(w)) = \alpha F(w)^{1+\theta},$$

which implies the desired PŁ property for F. □

GD for KŁ functions

In the following, we provide the respective problem dependent quantities and instantiate Theorem 26 to provide a convergence bound for GD for KŁ functions.

- We set

$$g(z) = \alpha z^{1+\theta}.$$

- Assumption 5 follows from Lemma 33 and Assumption 8 which implies that

$$\psi(z) = 4Hz.$$

- Assumption 6 follows from Assumption 8 which implies that

$$\rho(z) = H.$$

- The function θ is given by

$$\theta(z) = \int_{y=0}^{z} \frac{1}{\rho(y)} \, \mathrm{d}y = \frac{z}{H}.$$

- The function ζ is defined such that

$$\zeta^{-1}(z) = \int_{y=0}^{z} \frac{g(y)}{\psi(y)} \, \mathrm{d}y = \int_{y=0}^{z} \frac{\alpha y^{\theta}}{4H} \, \mathrm{d}y = \frac{\alpha}{4H(1+\theta)} z^{1+\theta},$$

  which implies that

$$\zeta(z) = \left(\frac{4H(1+\theta)z}{\alpha} \right)^{1/1+\theta}.$$

Plugging the above problem-dependent constants in Theorem 26 (under the case that $\Phi_g = F$) implies that setting

$$\eta = \sqrt{\frac{\theta(F(w_0))}{\psi(F(w_0))} \cdot \frac{1}{T}} \leq \frac{1}{2H\sqrt{T}},$$

GD has the rate

$$\begin{aligned} g(F(\widehat{w}_T)) &\leq 4\rho(\Phi_g(w_0))\sqrt{\theta(\Phi_g(w_0))\psi(\zeta(\Phi_g(w_0)))} \cdot \frac{1}{\sqrt{T}}. \\ &\leq \frac{8HF(w)}{\sqrt{T}}, \end{aligned}$$

which implies that

$$F(\widehat{w}_T) \leq \left(\frac{4HF(w)}{\alpha}\right)^{\frac{1}{1+\theta}} \cdot \frac{1}{T^{1/(2+2\theta)}}.$$

Clearly, the function $\frac{\psi(z)}{g(z)} = \frac{4H}{\alpha z^\theta}$ is not a monotonically increasing function of z, and thus the improved analysis for GD does not extend to this case.

SGD for KŁ functions

Suppose Assumption 7 is satisfies with $\chi(z) = \sigma^2$. In addition to the problem dependent quantities in Section 5.4.4, we define the function Λ used in Theorem 27 as

$$\Lambda(z) = 4Hz + 2\sigma^2.$$

Fix any $\bar{w}$ such that $F(\bar{w}) \geq F(w_0)$ and define $B = 16\left(H^{2+\theta}\frac{F(\bar{w})}{\alpha}\right)^{1/1+\theta} + 2\sigma^2$. Following Theorem 27 (in particular the bound in Remark 5), we note that for any

$$\eta \leq \frac{1}{20\log(20T)} \cdot \frac{F(\bar{w}) - F(w_0)}{\sqrt{BHF(\bar{w})T}},$$

the point returned by SGD algorithm after T iterations satisfies with probability at least 0.7,

$$g(F(\widehat{w}_T)) \leq 25\sqrt{BHF(w_0)} \cdot \frac{1}{\sqrt{T}},$$

which implies that

$$F(\widehat{w}_T) \leq 25\left(\frac{BHF(w_0)}{\alpha^2 T}\right)^{1/2+2\theta}.$$

5.4.5 Phase retrieval

For any $w \in \mathbb{R}^d$, the population loss for phase retrieval is given by

$$F(w) = \mathbb{E}_{a\sim\mathcal{N}(0,\mathrm{I}_d)}\Big[\big((a^\top w)^2 - (a^\top w^*)^2\big)^2\Big]. \tag{5.55}$$

Throughout this section, we will assume that the optimal parameter w^* satisfies $\|w^*\| = 1$. The following technical lemma establishes some useful properties of F.

Lemma 40. *Suppose $\|w^*\| = 1$. Then, the function F given in (5.55) satisfies for any $w \in \mathbb{R}^d$,*

(a) $F(w) = w^\top(\mathrm{I} - (w^*)(w^*)^\top)w + \frac{3}{4}(\|w\|^2 - 1)^2$.

(b) $\langle w^*, \nabla F(w)\rangle = 3(\|w\|^2 - 1)\langle w, w^*\rangle$.

(c) $\|\nabla F(w)\|^2 = 12\|w\|^2 F(w) - 8(\|w\|^2 - \langle w, w^*\rangle^2)$.

(d) $F(w) \geq (\|w\|^2 - 1)^2$.

(e) *if $F(w) \leq 1/4$, then w must satisfy $\langle w, w^*\rangle^2 \geq 1/4$.*

Proof. We prove each part separately below:

(a) The proof is straightforward. We refer the reader to Section 2.3 of Candes et al. (2015) for the proof.

(b) Note that

$$\nabla F(w) = 2w - 2\langle w, w^*\rangle w^* + 3(\|w\|^2 - 1)w.$$

Thus,

$$\begin{aligned}\langle w^*, \nabla F(w)\rangle &= 2\langle w, w^*\rangle - 2\langle w, w^*\rangle\|w^*\|^2 + 3(\|w\|^2 - 1)\langle w, w^*\rangle \\ &= 2\langle w, w^*\rangle - 2\langle w, w^*\rangle + 3(\|w\|^2 - 1)\langle w, w^*\rangle \\ &= 3(\|w\|^2 - 1)\langle w, w^*\rangle,\end{aligned}$$

where the second line above holds because $\|w^*\|^2 = 1$.

(c) We have

$$\begin{aligned}\|\nabla F(w)\|^2 &= \|2w - 2\langle w, w^*\rangle w^* + 3(\|w\|^2 - 1)w\|^2 \\ &= 4\|w\|^2 + 4\langle w, w^*\rangle^2\|w^*\|^2 + 9(\|w\|^2 - 1)^2\|w\|^2 - 8\langle w, w^*\rangle^2 \\ &\qquad - 12(\|w\|^2 - 1)\langle w, w^*\rangle^2 + 12(\|w\|^2 - 1)\|w\|^2 \\ &= -12\|w\|^2\langle w, w^*\rangle^2 + 12\|w\|^4 + 9(\|w\|^2 - 1)^2\|w\|^2 + 8\langle w, w^*\rangle^2 - 8\|w\|^2 \\ &= 12\|w\|^2\big(\|w\|^2 - \langle w, w^*\rangle^2 + \frac{3}{4}(\|w\|^2 - 1)^2\big) - 8\big(\|w\|^2 - \langle w, w^*\rangle^2\big) \\ &= 12\|w\|^2 F(w) - 8\big(\|w\|^2 - \langle w, w^*\rangle^2\big),\end{aligned}$$

where the equality in the third line holds because $\|w^*\|^2 = 1$ and the last line follows from the definition of the function $F(w)$ in part-(a) of this lemma.

(d) An application of Jensen's inequality implies that

$$\begin{aligned}F(w) &= \mathbb{E}_a\big[((a^\top w)^2 - (a^\top w^*)^2)^2\big] \\ &\geq \big(\mathbb{E}_a[(a^\top w)^2 - (a^\top w^*)^2]\big)^2 \\ &= (\|w\|^2 - \|w^*\|^2)^2,\end{aligned}$$

where the last line follow from the fact that for any w, we have $\mathbb{E}_{a\sim\mathcal{N}(0,\mathrm{I})}\big[(a^\top w)^2\big] = \|w\|^2$. The desired statement follows since $\|w^*\| = 1$.

(e) An application of Lemma 40-(d) implies that

$$\big(\|w\|^2 - 1\big)^2 \le F(w) \le \frac{1}{4},$$

which implies that $1/2 \le \|w\|^2 \le 3/2$. Next, using Lemma 40-(a), we note that

$$F(w) = w^\top(\mathrm{I} - (w^*)(w^*)^\top)w + \frac{3}{4}\big(\|w\|^2 - 1\big)^2 \ge \|w\|^2 - \langle w, w^*\rangle^2 \ge \frac{1}{2} - \langle w, w^*\rangle^2,$$

where the last line uses the above derived bound on $\|w\|^2$. Rearranging the terms and using the fact that $F(w) \le 1/4$ implies that $\langle w, w^*\rangle^2 \ge 1/4$.

□

Rate of convergence for gradient flow

The next lemma provides a rate of convergence for the phase retrieval population objective.

Lemma 41. *Consider the objective function F given in (5.55). Then, for any initial point point $w(0) = w_0$, the point $w(t)$ on its gradient flow path satisfies*

$$F(w(t)) \le \min\{F(w_0), F(w_0)e^{-t+\frac{1}{\langle w_0, w^*\rangle^2}}\},$$

Proof. Let $w(t)$ be the point on the GF path with starting point $w(0) = w_0$. For the ease of notation, define $\alpha(t) = \langle w(t), w^*\rangle^2$ and $\beta(t) = \|w\|^2 - \alpha(t)$. A closer look at the gradient flow dynamics $w'(t) = -\nabla F(w(t))$ reveals that:

$$\alpha'(t) = 6\big(\alpha(t) - \alpha(t)^2 - \alpha(t)\beta(t)\big),$$

$$\beta'(t) = 2\big(\beta(t) - 3\alpha(t)\beta(t) - 3\beta(t)^2\big). \tag{5.56}$$

Define the variable $\gamma(t) = \alpha(t)/\beta(t)$ and note that

$$\begin{aligned}\gamma'(t) &= \frac{1}{\beta(t)^2}(\beta(t)\alpha'(t) - \alpha(t)\beta'(t)) \\ &= \frac{2}{\beta(t)^2}(\beta(t)\alpha'(t) - \alpha(t)\beta'(t)) \\ &\overset{(i)}{\leq} \frac{4\alpha(t)}{\beta(t)} = 4\gamma(t),\end{aligned}$$

where (i) follows from plugging in the relations in (5.56). Solving the above differential equation implies that $\gamma(t) = \gamma(0)e^{4t}$, which on plugging in the form of γ implies that

$$\beta(t) = \alpha(t)\frac{\beta(0)}{\alpha(0)}e^{-4t}. \tag{5.57}$$

Plugging the above relation in (5.56) gives us the differential equation

$$\alpha'(t) = 6\left(\alpha(t) - \alpha(t)^2 - 3\alpha(t)^2\frac{\beta(0)}{\alpha(0)}e^{-4t}\right), \tag{5.58}$$

solving which implies that

$$\alpha(t) = \frac{\alpha(0)e^{6t}}{1 + 3\beta(0)(e^{2t} - 1) + \alpha(0)(e^{6t} - 1)}. \tag{5.59}$$

Plugging the above form of $\alpha(t)$ in (5.57) further implies that

$$\beta(t) = \frac{\beta(0)e^{2t}}{1 + 3\beta(0)(e^{2t} - 1) + \alpha(0)(e^{6t} - 1)}. \tag{5.60}$$

In the rest of the proof, we will show that

$$F(w(t)) \leq \min\{F(w(0)), F(w(0))e^{-t+\frac{1}{\alpha(0)}}\}. \tag{5.61}$$

For the ease of notation, we will use α and β to denote $\alpha(0)$ and $\beta(0)$ respectively. There are two natural cases for the above, (a) when $t \leq 1/\alpha(0)$ and (b) when

$t > 1/\alpha(0)$. In the former case, recalling that the function value is non-increasing along any gradient flow path (Lemma 31) we get that

$$F(w(t)) \leq F(w) \leq \min\{F(w(0)), F(w(0))e^{-t+\frac{1}{\alpha(0)}}\}.$$

We next show that (5.61) continues to holds when $t > 1/\alpha(0)$. Note that, from the form of F in Lemma 40-(a), we have

$$\begin{aligned}
F(w(t)) &= \|w(t)\|^2 - \langle w(t), w^*\rangle^2 + \frac{3}{4}\big(\|w\|^2 - 1\big)^2 \\
&= \beta(t) + \frac{3}{4}(\alpha(t) + \beta(t) - 1)^2 \\
&\overset{(i)}{=} \frac{\beta e^{2t}}{1 + 3\beta(e^{2t} - 1) + \alpha(e^{6t} - 1)} + \frac{3}{4}\left(\frac{\alpha e^{6t} + \beta e^{2t}}{1 + 3\beta(e^{2t} - 1) + \alpha(e^{6t} - 1)} - 1\right)^2 \\
&= \frac{\beta e^{2t}}{1 + 3\beta(e^{2t} - 1) + \alpha(e^{6t} - 1)} + \frac{3}{4}\left(\frac{-2\beta(e^{2t} - 1) - (1 - \alpha - \beta)}{1 + 3\beta(e^{2t} - 1) + \alpha(e^{6t} - 1)}\right)^2 \\
&\overset{(ii)}{\leq} \frac{\beta e^{2t}}{1 + 3\beta(e^{2t} - 1) + \alpha(e^{6t} - 1)} + 6\beta \cdot \frac{\beta(e^{2t} - 1)^2}{(1 + 3\beta(e^{2t} - 1) + \alpha(e^{6t} - 1))^2} \\
&\qquad + \frac{3}{2}\frac{(1 - \alpha - \beta)^2}{(1 + 3\beta(e^{2t} - 1) + \alpha(e^{6t} - 1))^2} \qquad (5.62)
\end{aligned}$$

where (i) follows by plugging in the relations (5.59) and (5.60), and (ii) holds because $(a + b)^2 \leq 2a^2 + 2b^2$ for any $a, b \geq 0$. In the following, we bound the three terms on the right hand side of (5.62) separately for $t \geq 1/\alpha$.

1. *Term I:* Ignoring the positive term $3\beta(e^{2t} - 1)$ in the denominator, we get that

$$\frac{\beta e^{2t}}{1 + 3\beta(e^{2t} - 1) + \alpha(e^{6t} - 1)} \leq \frac{\beta e^{2t}}{1 + \alpha(e^{6t} - 1)} \leq \frac{1}{3}\beta e^{-t+1/\alpha},$$

   where the last inequality follows from using Lemma 42 (given below).

2. *Term II:* For the second term, we note that

$$\frac{\beta(e^{2t} - 1)^2}{(1 + 3\beta(e^{2t} - 1) + \alpha(e^{6t} - 1))^2} \leq \max_{\beta > 0} \frac{\beta(e^{2t} - 1)^2}{(1 + 3\beta(e^{2t} - 1) + \alpha(e^{6t} - 1))^2}$$

$$
\begin{aligned}
&\overset{(i)}{=} (e^{2t}-1)\frac{(1+\alpha(e^{6t}-1))}{3}\cdot\frac{1}{4(1+\alpha(e^{6t}-1))^2}\\
&= \frac{1}{12}\cdot\frac{(e^{2t}-1)}{1+\alpha(e^{6t}-1)}\\
&\leq \frac{1}{12}\cdot\frac{e^{2t}}{1+\alpha(e^{6t}-1)}\\
&\overset{(ii)}{\leq} \frac{1}{36}\cdot e^{-t+\frac{1}{\alpha}},
\end{aligned}
$$

where (i) holds because the term on the right hand side in the equation above is maximized at $\beta = (1+\alpha(e^{6t}-1))/3(e^{2t}-1)$, and (ii) follow from an application of Lemma 42 (given below).

3. *Term III:* Since the term on the denominator is larger than 1, we have that

$$
\begin{aligned}
\frac{(1-\alpha-\beta)^2}{(1+3\beta(e^{2t}-1)+\alpha(e^{6t}-1))^2} &\leq \frac{(1-\alpha-\beta)^2}{(1+3\beta(e^{2t}-1)+\alpha(e^{6t}-1))}\\
&\leq (1-\alpha-\beta)^2\cdot\frac{e^{2t}}{(1+3\beta(e^{2t}-1)+\alpha(e^{6t}-1))}\\
&\leq \frac{1}{3}\cdot(1-\alpha-\beta)^2\cdot e^{-t+\frac{1}{\alpha}},
\end{aligned}
$$

where the inequality in the second last line holds for any $t \geq 0$ and the last line is due to Lemma 42 (given below).

Plugging the above three bounds in (5.62), we get that for any $t \geq \frac{1}{\alpha}$,

$$
\begin{aligned}
F(w) &\leq \frac{1}{3}\beta e^{-t+1/\alpha} + \frac{1}{6}\beta e^{-t+\frac{1}{\alpha}} + \frac{1}{2}\cdot(1-\alpha-\beta)^2\cdot e^{-t+\frac{1}{\alpha}}\\
&\leq \big(\beta + \frac{3}{4}(1-\alpha-\beta)^2\big)e^{-t+\frac{1}{\alpha}}\\
&= F(w(0))e^{-t+\frac{1}{\langle w(0),w^*\rangle^2}},
\end{aligned}
$$

where in the last line we used the form of F from Lemma 40-(a) and the fact that $\alpha = \alpha(0) = \langle w(0), w^*\rangle^2$ and $\beta = \beta(0) = \|w(0)\|^2 - \langle w(0), w^*\rangle^2$. Finally, using Lemma 31, we note that $F(w(t)) \leq F(w)$. Combining these two bounds gives us the relation in (5.61) for any $t \geq 1/\alpha(0)$. $\square$

Lemma 42. *For any $\alpha > 0$ and $t \geq 1/\alpha$,*

$$\frac{e^{2t}}{1+\alpha(e^{6t}-1)} \leq \frac{e^{-t+\frac{1}{\alpha}}}{3}.$$

Proof. We consider two cases when $\alpha \geq 1$ and when $\alpha < 1$ separately below:

1. *Case 1: $\alpha \geq 1$:* Define $g(t) = e^{3t}/(1+\alpha(e^{6t}-1))$ and note that g is a non-increasing function of t for $\alpha \geq 1$. Thus, for any $t \geq 1/\alpha$,

$$g(t) \leq g(\tfrac{1}{\alpha}) = \frac{e^{\frac{3}{\alpha}}}{1+\alpha(e^{\frac{6}{\alpha}}-1)} \leq \frac{1}{3}e^{\frac{1}{\alpha}},$$

   where the last inequality holds because the function $\zeta(z) = e^z/3 - e^{3z}/(1+(e^{6z}-1)/z)$ is non-negative whenever $z \geq 0$. Multiplying both the sides by e^{-t} gives the desired relation.

2. *Case 2: $\alpha < 1$:* In this case, ignoring positive terms in the denominator (since $1-\alpha > 0$), we get

$$\frac{e^{2t}}{1+\alpha(e^{6t}-1)} = \frac{e^{2t}}{1-\alpha+\alpha e^{6t}} \leq \frac{e^{2t}}{\alpha e^{6t}} = e^{-t} \cdot \frac{e^{-3t}}{\alpha} \leq \frac{1}{3}e^{-t+1/\alpha},$$

   where the second to last inequality follows from the fact that e^{-3t} is a decreasing function of t and thus for $t \geq 1/\alpha$, we have that $e^{-3t} \leq e^{-3/\alpha}$. The last inequality holds because $\frac{1}{\alpha}e^{-\frac{3}{\alpha}} \leq \frac{1}{3}e^{1/\alpha}$ for any $\alpha > 0$.

□

The next lemma shows that the rate function in Lemma 41 is admissible.

Lemma 43. *Consider the function R defined as*

$$R(w,t) = \min\{F(w), F(w)e^{-t+\frac{1}{\langle w,w^*\rangle^2}}\}.$$

Then, R is an admissible rate of convergence for the objective function F.

Proof. Recall that a sufficient conditions for a rate function R to be admissible w.r.t. the objective F is that for any point w,

$$\int_{t=0}^{\infty}\Big(\frac{\partial R(w,t)}{\partial t}+\langle\nabla_w R(w,t),\nabla F(w)\rangle\Big)\,\mathrm{d}t\geq 0. \tag{5.63}$$

Since the function R is not differentiable at $t=1/\langle w,w^*\rangle^2$, we use the following definition of the partial derivative

$$\frac{\partial R(w,t)}{\partial t}=\begin{cases}0 & \text{for}\quad t\leq 1/\langle w,w^*\rangle^2\\ -F(w)e^{-t+\frac{1}{\langle w,w^*\rangle^2}} & \text{for}\quad t>1/\langle w,w^*\rangle^2\end{cases},$$

and

$$\nabla_w R(w,t)=\begin{cases}\nabla F(w) & \text{for}\quad t\leq 1/\langle w,w^*\rangle^2\\ \Big(\nabla F(w)-2\frac{F(w)w^*}{\langle w,w^*\rangle^3}\Big)\cdot e^{-t+\frac{1}{\langle w,w^*\rangle^2}} & \text{for}\quad t>1/\langle w,w^*\rangle^2\end{cases}.$$

Thus, we get that

$$\int_{t=0}^{\infty}\frac{\partial R(w,t)}{\partial t}\,\mathrm{d}t=-F(w),$$

and

$$\begin{aligned}
&\int_{t=0}^{\infty}\langle\nabla_w R(w,t),\nabla F(w)\rangle\,\mathrm{d}t\\
&\quad=\int_{t=0}^{\frac{1}{\langle w,w^*\rangle^2}}\langle\nabla_w R(w,t),\nabla F(w)\rangle\,\mathrm{d}t+\int_{\frac{1}{\langle w,w^*\rangle^2}}^{t=\infty}\langle\nabla_w R(w,t),\nabla F(w)\rangle\,\mathrm{d}t\\
&\quad=\int_{t=0}^{\frac{1}{\langle w,w^*\rangle^2}}\|\nabla F(w)\|^2\,\mathrm{d}t\\
&\qquad\qquad+\int_{\frac{1}{\langle w,w^*\rangle^2}}^{\infty}\left(\|\nabla F(w)\|^2-2F(w)\frac{\langle\nabla F(w),w^*\rangle}{\langle w,w^*\rangle^3}\right)\cdot e^{-t+\frac{1}{\langle w,w^*\rangle^2}}\,\mathrm{d}t\\
&\quad=\int_{t=0}^{\frac{1}{\langle w,w^*\rangle^2}}\|\nabla F(w)\|^2\,\mathrm{d}t+\int_{0}^{\infty}\left(\|\nabla F(w)\|^2-2F(w)\frac{\langle\nabla F(w),w^*\rangle}{\langle w,w^*\rangle^3}\right)\cdot e^{-t}\,\mathrm{d}t\\
&\quad=\frac{\|\nabla F(w)\|^2}{\langle w,w^*\rangle^2}+\|\nabla F(w)\|^2-2F(w)\frac{\langle\nabla F(w),w^*\rangle}{\langle w,w^*\rangle^3}\\
&\quad=\frac{\|\nabla F(w)\|^2}{\langle w,w^*\rangle^2}+\|\nabla F(w)\|^2-6F(w)\frac{(\|w\|^2-1)}{\langle w,w^*\rangle^2},
\end{aligned}$$

where the last line follows from the fact that $\nabla F(w) = 3(\|w\|^2 - 1)w$. Plugging the above in (5.63), we get that a sufficient condition for R to be an admissible rate of convergence is that

$$\frac{\|\nabla F(w)\|^2}{\langle w, w^*\rangle^2} + \|\nabla F(w)\|^2 - F(w)\left(\frac{6(\|w\|^2 - 1)}{\langle w, w^*\rangle^2} + 1\right) \geq 0,$$

or equivalently that

$$\|\nabla F(w)\|^2 + \langle w, w^*\rangle^2 \|\nabla F(w)\|^2 - F(w)\big(6\|w\|^2 - 6 + \langle w, w^*\rangle^2\big) \geq 0. \tag{5.64}$$

We next observe that (5.64) holds if

$$\begin{aligned}
0 &\leq \|\nabla F(w)\|^2 - F(w)\big(6\|w\|^2 - 6 + \langle w, w^*\rangle^2\big) \\
&\overset{(i)}{=} 12\|w\|^2 F(w) - 8\big(\|w\|^2 - \langle w, w^*\rangle^2\big) - F(w)\big(6\|w\|^2 - 6 + \langle w, w^*\rangle^2\big) \\
&= F(w)\big(6\|w\|^2 - \langle w, w^*\rangle^2 + 6\big) - 8(\|w\|^2 - \langle w, w^*\rangle^2) \\
&\overset{(ii)}{=} \left(\|w\|^2 - \langle w, w^*\rangle^2 + \frac{3}{4}\big(\|w\|^2 - 1\big)^2\right)\big(6\|w\|^2 - \langle w, w^*\rangle^2 + 6\big) - 8(\|w\|^2 - \langle w, w^*\rangle^2),
\end{aligned} \tag{5.65}$$

where the (i) and (ii) follow by plugging in the forms of $\|\nabla F(w)\|^2$ and $F(w)$ from Lemma 40. In the following, we argue that the relation (5.65) holds for any w.

Consider the 2d function

$$\Lambda(\alpha, \beta) := \left(\beta + \frac{3}{4}(\alpha + \beta - 1)^2\right)(5\alpha + 6\beta + 6) - 8\beta$$

and note that $\Lambda(\alpha, \beta) \geq 0$ whenever $\alpha \geq 0$ and $\beta \geq 0$ (this can be easily checked by plotting the two dimensional function Λ). Setting $\alpha = \langle w, w^*\rangle^2$ and $\beta = \|w\|^2 - \langle w, w^*\rangle^2$, we note that both $\alpha, \beta \geq 0$ and so (5.65) follows immediately, which further implies that the relation in (5.64) holds. Thus, the sufficient conditions for R to be an admissible rate of convergence hold, and the statement of the lemma follows. $\square$

Proof of Lemma 26. We prove the rate of convergence in Lemma 41 and show its admissibility in Lemma 43 above. □

Potential function and self-bounding regularity conditions

Consider the function

$$R(w,t) = \min\{F(w), F(w)e^{-t+\frac{1}{\langle w,w^*\rangle^2}}\}.$$

Lemma 41 and Lemma 43 imply that R is an admissible rate of convergence for the objective function F. Thus, using Theorem 24 with $g(z) = z$, we get that the function Φ constructed in the following is an admissible potential function for F,

$$\begin{aligned}
\Phi(w) &= \int_{t=0}^{\infty} R(w,t)\,\mathrm{d}t \\
&= \int_{t=0}^{\infty} \min\{F(w), F(w)e^{-t+\frac{1}{\langle w,w^*\rangle^2}}\}\,\mathrm{d}t \\
&= \int_{t=0}^{t=\frac{1}{\langle w,w^*\rangle^2}} \min\{F(w), F(w)e^{-t+\frac{1}{\langle w,w^*\rangle^2}}\}\,\mathrm{d}t \\
&\qquad\qquad + \int_{t=\frac{1}{\langle w,w^*\rangle^2}}^{\infty} \min\{F(w), F(w)e^{-t+\frac{1}{\langle w,w^*\rangle^2}}\}\,\mathrm{d}t \\
&= \int_{t=0}^{t=\frac{1}{\langle w,w^*\rangle^2}} F(w)\,\mathrm{d}t + \int_{t=\frac{1}{\langle w,w^*\rangle^2}}^{\infty} F(w)e^{-t+\frac{1}{\langle w,w^*\rangle^2}}\,\mathrm{d}t \\
&= \frac{F(w)}{\langle w,w^*\rangle^2} + F(w). \qquad (5.66)
\end{aligned}$$

We first establish the self-bounding regularity conditions for F.

Lemma 44. *Let $\|w^*\| = 1$. For any point w,*

$$\|\nabla F(w)\|^2 \le 12F(w)^{3/2} + 12F(w)$$

and

$$\|\nabla^2 F(w)\| \leq 10 + 9\sqrt{F(w)}.$$

Proof. We first bound $\|\nabla F(w)\|^2$. Using Lemma 40-(c), we have that

$$\begin{aligned}
\|\nabla F(w)\|^2 &= 12\|w\|^2 F(w) - 8\big(\|w\|^2 - \langle w, w^*\rangle^2\big) \\
&\leq 12\|w\|^2 F(w) \\
&\leq 12\big(\big|\|w\|^2 - \|w^*\|^2\big| + \|w^*\|^2\big) F(w) \\
&\leq 12\Big(\sqrt{F(w)} + \|w^*\|^2\Big) F(w) \\
&= 12F(w)^{3/2} + 12F(w),
\end{aligned}$$

where the first inequality holds because $\|w\|^2 - \langle w, w^*\rangle^2 \geq 0$ whenever $\|w^*\| \leq 1$, the second inequality is an application of the Triangle inequality and the last inequality follows from Lemma 40-(d). The equality in the last line holds because $\|w^*\| = 1$. Note that the function on the right hand size above is positive and monotonically increasing in $F(w)$.

We next bound $\|\nabla^2 F(w)\|$. From the form of F in Lemma 40-(a), we get that

$$\nabla^2 F(w) = 2\mathrm{I} - 2(w^*)(w^*)^\top + 3(\|w\|^2 - 1)\mathrm{I} + 6ww^\top.$$

Thus, using Triangle inequality, we have

$$\|\nabla^2 F(w)\| \leq 2 + 2\|w^*\|^2 + 3(\|w\|^2 - 1) + 6\|w\|^2 = 10 + 9(\|w\|^2 - 1) \leq 10 + 9\sqrt{F(w)},$$

where the equality in the second line holds because $\|w^*\| = 1$ and the last line is due to Lemma 40-(d).

□

We next establish self-bounding regularity conditions for the potential function Φ.

Lemma 45. *Let $\|w^*\| = 1$. For any point w, The function Φ defined in (5.66) satisfies for any point w,*

$$\|\nabla\Phi(w)\| \leq 39\Phi(w)^2 + 17,$$

and

$$\|\nabla^2\Phi(w)\| \leq 54\Phi(w)^3 + 215\Phi^2(w) + 23\Phi(w) + 79 \leq 300\Phi(w)^3 + 100.$$

Proof. Before delving into self-bounding regularity conditions for Φ, we first derive an upper bound on $1/\langle w, w^*\rangle^2$. Note that

$$\begin{aligned}
\left|1 - \langle w, w^*\rangle^2\right| &\leq \left|1 - \|w\|^2\right| + \left|\|w\|^2 - \langle w, w^*\rangle^2\right| \\
&\leq \sqrt{F(w)} + \frac{3}{4}\left|\left(\|w\|^2 - 1\right)^2 - F(w)\right| \\
&\leq \sqrt{F(w)} + \frac{3}{4}\left|\|w\|^2 - 1\right|^2 + F(w) \\
&\leq \sqrt{F(w)} + 2F(w),
\end{aligned}$$

where the first and the third inequality above follows from Triangle inequality, and the second and the forth inequalities are due to Lemma 40-(a, d). Squaring both the sides, we get that

$$1 + \langle w, w^*\rangle^4 - 2\langle w, w^*\rangle^2 \leq 2F(w) + 8F(w)^2.$$

Ignoring positive terms on the left hand size and dividing both the sides by $\langle w, w^*\rangle^2$, we get that

$$\begin{aligned}
\frac{1}{\langle w, w^*\rangle^2} &\leq 2 + 2\frac{F(w)}{\langle w, w^*\rangle^2} + 8\frac{F(w)^2}{\langle w, w^*\rangle^2} \\
&\leq 2 + 2\Phi(w) + 8F(w)\Phi(w) \\
&\leq 2 + 2\Phi(w) + 8\Phi^2(w)
\end{aligned}$$

$$\leq 3 + 9\Phi^2(w), \tag{5.67}$$

where the inequalities in second and the third line follow from the fact that both $F(w)/\langle w, w^*\rangle^2$ and $F(w)$ are smaller than $\Phi(w)$ (from the definition in (5.66) and because $F(w) \geq 0$). The last line is due to AM-GM inequality.

We now prove the self-bounding regularity conditions for w.

- *Bound on* $\|\nabla\Phi(w)\|$. Note that

$$\nabla\Phi(w) = \frac{\nabla F(w)}{\langle w, w^*\rangle^2} - \frac{2F(w)}{\langle w, w^*\rangle^3} w^* + \nabla F(w).$$

Using Triangle inequality and the fact that $\|w^*\| = 1$, we get

$$\begin{aligned}
\|\nabla\Phi(w)\| &\leq \frac{\|\nabla F(w)\|}{\langle w, w^*\rangle^2} + 2\frac{F(w)}{\langle w, w^*\rangle^2} \cdot \frac{1}{|\langle w, w^*\rangle|} + \|\nabla F(w)\| \\
&\overset{(i)}{\leq} \|\nabla F(w)\|\left(\frac{1}{\langle w, w^*\rangle^2} + 1\right) + 2\Phi(w) \cdot \frac{1}{|\langle w, w^*\rangle|} \\
&\overset{(ii)}{\leq} \sqrt{12F(w)^{3/2} + 12F(w)}\left(\frac{1}{\langle w, w^*\rangle^2} + 1\right) + 2\Phi(w) \cdot \frac{1}{|\langle w, w^*\rangle|} \\
&\overset{(iii)}{\leq} \sqrt{15F^2(w) + 9} \cdot \left(\frac{1}{\langle w, w^*\rangle^2} + 1\right) + \Phi^2(w) + \frac{1}{\langle w, w^*\rangle^2} \\
&\overset{(iv)}{\leq} 4F(w)\left(\frac{1}{\langle w, w^*\rangle^2} + 1\right) + 3 + \Phi^2(w) + \frac{4}{\langle w, w^*\rangle^2},
\end{aligned}$$

where (i) holds because $F(w)/\langle w, w^*\rangle^2 \leq \Phi(w)$, (ii) is due to Lemma 44 and (iii) follows from multiple applications of AM-GM inequality. The inequality (iv) is due to subadditivity of square-root and from rearranging the terms. Plugging in the bound in (5.67) and the definition in (5.66) in the above, we get that

$$\begin{aligned}
\|\nabla\Phi(w)\| &\leq 37\Phi(w)^2 + 4\Phi(w) + 15 \\
&\leq 39\Phi(w)^2 + 17,
\end{aligned} \tag{5.68}$$

where the last line holds due to AM-GM inequality.

- *Bound on* $\|\nabla^2\Phi(w)\|$. Note that

$$\nabla^2\Phi(w) = \nabla^2 F(w)\left(\frac{1}{\langle w, w^*\rangle^2} + 1\right) - 2\frac{\nabla F(w)(w^*)^\top}{\langle w, w^*\rangle^3} - 2\frac{w^*(\nabla F(w))^\top}{\langle w, w^*\rangle^3} + 6\frac{F(w)\cdot(w^*)(w^*)^\top}{\langle w, w^*\rangle^4}. \tag{5.69}$$

Using Triangle inequality, Cauchy Schwartz inequality and the fact that $\|w^*\| = 1$, we get

$$\|\nabla^2\Phi(w)\| \leq \|\nabla^2 F(w)\|\left(\frac{1}{\langle w, w^*\rangle^2} + 1\right) + 4\frac{\|\nabla F(w)\|}{|\langle w, w^*\rangle|^3} + 6\frac{F(w)}{\langle w, w^*\rangle^4}.$$

We bound each of the terms separately below:

(a) *Term I:* Using Lemma 44, we get that

$$\begin{aligned}
\|\nabla^2 F(w)\|\left(\frac{1}{\langle w, w^*\rangle^2} + 1\right) &\leq (10 + 9\sqrt{F(w)})\left(\frac{1}{\langle w, w^*\rangle^2} + 1\right) \\
&\leq 10 + \frac{10}{\langle w, w^*\rangle^2} + \frac{9\sqrt{F(w)}}{\langle w, w^*\rangle^2} \\
&\leq 10 + \frac{10}{\langle w, w^*\rangle^2} + \frac{9}{2\langle w, w^*\rangle^2} + \frac{9}{2}\frac{F(w)}{\langle w, w^*\rangle^2} \\
&\leq 55 + 135\Phi^2(w) + \frac{9}{2}\Phi(w),
\end{aligned}$$

where the second line is due to AM-GM inequality and the last line follows from plugging in (5.66) and (5.67).

(b) *Term II:* Using the bound from Lemma 44, we get

$$\begin{aligned}
4\frac{\|\nabla F(w)\|}{|\langle w, w^*\rangle|^3} &\leq 4\sqrt{12F(w)^{3/2} + 12F(w)}\cdot\frac{1}{|\langle w, w^*\rangle^3|} \\
&\leq (16F(w) + 12)\cdot\frac{1}{|\langle w, w^*\rangle^3|} \\
&\leq 16\Phi(w)\cdot\frac{1}{|\langle w, w^*\rangle|} \\
&\leq 24 + 80\Phi^2(w),
\end{aligned}$$

where the line line is due to AM-GM inequality and subadditivity of square-root, the third line is due to (5.66), the forth line again uses AM-GM inequality and the last line follows from plugging in the bound in (5.67).

(c) *Term III:* Using the fact that $F(w)/\langle w, w^*\rangle^2 \leq \Phi(w)$ from (5.66), we get that

$$\begin{aligned}\frac{6F(w)}{\langle w, w^*\rangle^4} &\leq 6\Phi(w) \cdot \frac{1}{\langle w, w^*\rangle^2} \\ &\leq 18\Phi(w) + 54\Phi(w)^3,\end{aligned}$$

where the second inequality follows by plugging (5.67).

Plugging the three bounds above in (5.69), we get that

$$\|\nabla^2\Phi(w)\| \leq 54\Phi(w)^3 + 215\Phi^2(w) + 23\Phi(w) + 79.$$

□

GD for phase retrieval

In the following, we provide the convergence guarantee for GD algorithm. We first define the respective problem dependent quantities and instantiate Theorem 26 to provide an $O(1/T)$ bound for GD. We then provide a refined analysis which improves this bound to $O(e^{-T})$.

$O(1/T)$ rate by direct application of Theorem 26.

- Setting $g(z) = z$ implies the potential function

$$\Phi(w) = \frac{F(w)}{\langle w, w^*\rangle^2} + F(w).$$

- Assumption 5 follows from Lemma 44 which implies that

$$\psi(z) = 12z^{3/2} + 12z.$$

- Assumption 6 follows from Lemma 45 which implies that

$$\rho(z) = 300z^3 + 100.$$

- The function θ is given by

$$\theta(z) = \int_{y=0}^{z} \frac{1}{\rho(y)} \, \mathrm{d}y \leq \frac{z}{100}.$$

- The monotonically increasing function ζ is defined such that

$$\zeta^{-1}(z) = \int_{y=0}^{z} \frac{g(y)}{\psi(y)} \, \mathrm{d}y = \frac{1}{6}\big(\sqrt{z} - \log(1+\sqrt{z})\big) \geq \frac{1}{12}\sqrt{z},$$

  which implies that

$$\zeta(z) \leq 144z^2.$$

Note that the function $\frac{\psi(z)}{g(z)} = 12\sqrt{z} + 12$ is clearly a monotonically increasing function of z. Thus, plugging the above problem-dependent constants in Theorem 26 implies that setting η such that

$$\eta \propto \frac{1}{(1+\Phi(w_0))(1+\Phi(w_0)^3)}$$

implies that GD for any $T \geq 1$ has the rate

$$g(F(\widehat{w}_T)) \lesssim \frac{\Phi(w_0) + \Phi(w_0)^8}{T}, \tag{5.70}$$

where recall that $\Phi(w_0) = \frac{F(w_0)}{\langle w_0, w^* \rangle^2} + F(w_0)$.

$O(e^{-T})$ rate via a refined analysis. We can further improve over the rate in (5.70) by a refined analysis for GD. In the following, we will show that GD in fact enjoys a $e^{-O(T-\tau)}$ rate of convergence for GD for all $T \geq \tau$, where τ depends on w_0 and problem dependent parameters specified below.

Before delving into the proof of the above, we first provide the relevant improved version of problem dependent parameters that hold for any w for which $F(w) \leq 1$:

- Assumption 5 follows from Lemma 44 which implies that

$$\psi(z) = 24z.$$

- Assumption 6 follows from Lemma 45 which implies that

$$\rho(z) = 400.$$

- The function θ is given by

$$\theta(z) = \int_{y=0}^{z} \frac{1}{\rho(y)} \, \mathrm{d}y = \frac{z}{400}. \tag{5.71}$$

We are now ready to provide the improved convergence rate for GD. Note that using (5.70), there exists some

$$\tau \leq 20\big(\Phi(w_0) + \Phi(w_0)^8\big) \tag{5.72}$$

for which $F(w_\tau) \leq 1/20$. Using Lemma 40-(e), we get that such a point w_τ must satisfy $\langle w_\tau, w^* \rangle^2 \geq 1/4$, which implies that

$$\Phi(w_\tau) = \frac{F(w_\tau)}{\langle w_\tau, w^* \rangle^2} + F(w_\tau) \leq 5F(w_\tau) \leq \frac{1}{4}.$$

In the following, we first show via induction that $\langle w_t, w^* \rangle \geq 1/4$ and $\Phi(w_t) \leq 1/4$ for all $t \geq \tau$. As shown above, the base case for $t = \tau$ holds. For the induction step,

consider any $t \geq \tau$ and assume that $\langle w_t, w^* \rangle^2 \geq 1/4$ and $\Phi(w_t) \leq 1/4$; we will show that the same holds for w_{t+1}. Starting from (5.36) in the proof of Theorem 26, we note that

$$\theta(\Phi(w_{t+1})) \leq \theta(\Phi(w_t)) - \frac{\eta}{2\rho(\Phi(w_0))} g(F(w_t))). \tag{5.73}$$

However, also note that w_t satisfies,

$$F(w_t) \leq \Phi(w_t) = \frac{F(w_t)}{\langle w_t, w^* \rangle^2} + F(w_t) \leq 5F(w_t), \tag{5.74}$$

where the last inequality holds since $\langle w_t, w^* \rangle^2 \geq 1/4$ by induction hypothesis. Plugging the relation (5.74) in (5.73) and using the fact that $g(z) = z$, we get that

$$\theta(\Phi(w_{t+1})) \leq \theta(\Phi(w_t)) - \frac{\eta}{10\rho(\Phi(w_0))} \Phi(w_t),$$

Plugging in the value of θ and ρ from (5.71) in the above, we get that

$$\begin{aligned} \Phi(w_{t+1}) &\leq \Phi(w_t) - \frac{\eta}{10} \Phi(w_t) \\ &= \Phi(w_t) \Big(1 - \frac{\eta}{10}\Big). \end{aligned} \tag{5.75}$$

The above clearly implies that $\Phi(w_{t+1}) \leq \Phi(w_t) \leq 1/4$. Furthermore, from the definition of Φ, we immediately get that $F(w_{t+1}) \leq 1/4$, plugging which in Lemma 40-(e) implies that $\langle w_{t+1}, w^* \rangle^2 \geq 1/4$. This completes the induction step hence showing that $\langle w_t, w^* \rangle \geq 1/4$ and $\Phi(w_t) \leq 1/4$ holds for all $t \geq \tau$.

Now, in order to complete the proof of convergence, note that (5.75) will hold for all $t \geq \tau$, recursing which implies that

$$\Phi(w_T) \leq \Phi(w_\tau) \Big(1 - \frac{\eta}{10}\Big)^{T-\tau} \leq \Phi(w_\tau) e^{-\eta(T-\tau)/10} \leq \frac{1}{4} e^{-\eta(T-\tau)/10},$$

where the last inequality holds since $\Phi(w_\tau) \leq 1/4$.

Plugging in the value of τ from (5.75), we get that for all $T \geq \tau = 20(\Phi(w_0) + \Phi(w_0)^8)$, GD has convergence rate

$$F(w_T) \leq \Phi(w_T) \leq \frac{1}{4} e^{-\frac{\eta(T-\tau)}{10}}. \tag{5.76}$$

SGD for phase retrieval

We build on the problem dependent quantities introduced in Section 5.4.5. Suppose SGD is run with stochastic gradient estimates that satisfy Assumption 7 with

$$\chi(z) = \min\{\sqrt{z}, c\},$$

where c is a universal constant. Such a bound is satisfied when the stochastic gradient estimate is computed by using samples from $\mathcal{S}$ where a fresh sample is used for each estimate, i.e. $\nabla f(w; (a, y)) = 4((a^\top w)^2 - y)(a^\top w)w$ (c.f. Candes et al. (2015, Lemma 7.4, 7.7)). Using the above, we define the function Λ used in Theorem 27 as

$$\Lambda(z) = 24z^{3/2} + 24z + 2\min\{\sqrt{z}, c\}.$$

Fixing any $\bar{w}$ such that $F(\bar{w}) \geq F(w_0)$ and define $B = 24\Phi(\bar{w})^3 + 24\Phi(\bar{w})^2 + 2\min\{\Phi(\bar{w}), c\}$. The following guarantee is due to Theorem 27 (in particular the bound in Remark 5). We have that for any

$$\eta \leq \frac{1}{2\log(20T)} \cdot \frac{\Phi(\bar{w}) - \Phi(w_0)}{\sqrt{\Phi(\bar{w})T}},$$

the point returned by SGD algorithm after T iterations satisfies with probability at least 0.7,

$$g(F(\widehat{w}_T)) \lesssim (1 + \Phi(\bar{w})^3)\sqrt{B\Phi(\bar{w})} \cdot \frac{1}{\sqrt{T}},$$

where recall that $\Phi(w) = \frac{F(w)}{\langle w, w^* \rangle^2} + F(w)$. The above immediately implies a bound on $F(\widehat{w}_T)$ since $g(z) = z$.

5.4.6 Proof of Lemma 27

The proof of Lemma 27 follows by defining a rate function which holds for every initial point. We then get an admissible potential function by using Theorem 24. The desired self-bounding regularity conditions follow by plugging in the given properties of Γ and h in the lemma statement.

Proof of Lemma 27. Note that for any initialization $w(0) = w$ for which $h(w) \geq 0$, gradient flow satisfies $F(w(t)) \leq R(w,t)$. Define the function $\widetilde{R}(w,t) = R(w, h(w)t)$. Clearly, for any w,

$$F(w(t)) \leq \widetilde{R}(w,t) = R(w, h(w)t).$$

To see the above, note that when $h(w) = 0$, the above relation simply reduces to $F(w(t)) \leq R(w,0)$ which holds from our assumptions. When $0 < h(w) \leq 1$, we have that $F(w(t)) = R(w,t) \leq R(w, h(w)t)$ which again holds because $R(w,\cdot)$ is monotonically decreasing in t and because $h(w) \leq 1$.

Next, using the premise that $\widetilde{R}$ is admissible rate function w.r.t. F, and Theorem 24, we get that the function Φ_g defined below is an admissible potential function w.r.t. F with $g(z) = z$,

$$\Phi_g(w) = \int_{t=0}^{\infty} \bar{R}(w,t)\,\mathrm{d}t = \int_{t=0}^{\infty} R(w, h(w)t)\,\mathrm{d}t = \frac{\Gamma(w)}{h(w)}.$$

In the following, we show that Assumption 6 (self-bounding regularity conditions) hold for the potential function Φ_g. First note that, for any w, the assumption $(h(w) - h(w^*))^2 \leq \mu(\Gamma(w))$ implies that

$$\mu(\Gamma(w)) \geq h(w^*)^2 + h(w)^2 - 2h(w)h(w^*)$$

$$\geq h(w^*)^2 - 2h(w)h(w^*),$$

which after rearranging the terms implies that

$$\begin{aligned}
\frac{1}{h(w)} &\leq \frac{1}{h(w^*)^2}\left(2h(w^*) + \frac{\mu(\Gamma(w))}{h(w)}\right) \\
&\leq \frac{1}{h(w^*)^2}\left(2h(w^*) + \mu\left(\frac{\Gamma(w)}{h(w)}\right)\right) \\
&= \frac{1}{h(w^*)^2}(2h(w^*) + \mu(\Phi_g(w))),
\end{aligned} \tag{5.77}$$

where the second inequality holds because $h(w) \leq 1$ and μ satisfies the property that $k\pi(z) \leq \pi(kz)$ for any $k \geq 1$.

We are now ready to establish the self-bounding regularity properties for Φ_g.

(*a*) $\|\nabla\Phi_g(w)\|$ *satisfies self-bounding regularity.* Using Chain rule and Triangle inequality, we have that

$$\begin{aligned}
\|\nabla\Phi_g(w)\| &\leq \frac{\|\nabla\Gamma(w)\|}{h(w)} + \frac{\Gamma(w)}{h(w)^2}\|\nabla h(w)\| \\
&\overset{(i)}{\leq} \frac{\lambda(\Gamma(w))}{h(w)} + \Phi_g(w)\frac{\pi(\Gamma(w))}{h(w)} \\
&\overset{(ii)}{\leq} \frac{1}{h(w)}\lambda\left(\frac{\Gamma(w)}{h(w)}\right) + \frac{1}{h(w)}\Phi_g(w)\pi\left(\frac{\Gamma(w)}{h(w)}\right) \\
&= \frac{1}{h(w)}\lambda(\Phi_g(w)) + \frac{1}{h(w)}\Phi_g(w)\pi(\Phi_g(w)) \\
&\overset{(iii)}{\leq} \left(\frac{2}{h(w^*)} + \frac{\mu(\Phi_g(w))}{h(w^*)^2}\right)\cdot(\lambda(\Phi_g(w)) + \Phi_g(w)\pi(\Phi_g(w)))
\end{aligned}$$

where (i) holds due to the assumption that $\|\nabla\Gamma(w)\| \leq \lambda(\Gamma(w))$ and $\|\nabla h(w)\| \leq \pi(\Gamma(w))$, (ii) holds because λ and π are positive, monotonically increasing functions and $h(w) \leq 1$. The equality in the next line follows from the definition of $\Phi_g(w)$, and the inequality (iii) follows from plugging in (5.77).

Note that the function

$$\zeta(z) = \frac{1}{h(w^*)^2}(2h(w^*) + \mu(z)) \cdot (\lambda(z) + z\pi(z))$$

appearing on the right side above is positive, monotonically increasing.

(*b*) $\|\nabla^2\Phi_g(w)\|$ *satisfies self-bounding regularity.* Using Chain rule and Triangle inequality, we get that

$$\|\nabla^2\Phi_g(w)\| \leq \frac{\|\nabla^2\Gamma(w)\|}{h(w)} + 2\frac{\|\nabla\Gamma(w)\nabla h(w)^\top\|}{h(w)^2} + \frac{\Gamma(w)}{h(w)^3}\|\nabla h(w)\|^2 + \frac{\Gamma(w)}{h(w)^2}\|\nabla^2 h(w)\|. \tag{5.78}$$

We bound each of the terms in the RHS above separately, as follows:

- For the first term in (5.78), using the relation $\|\nabla^2\Gamma(w)\| \leq \lambda(\Gamma(w))$, we get

$$\begin{aligned}\frac{\|\nabla^2\Gamma(w)\|}{h(w)} &\leq \frac{\lambda(\Gamma(w))}{h(w)} \\ &\leq \lambda(\Gamma(w)) \cdot \left(\frac{2}{h(w^*)} + \frac{\mu(\Phi_g(w))}{h(w^*)^2}\right) \\ &\leq \lambda(\Phi_g(w)) \cdot \left(\frac{2}{h(w^*)} + \frac{\mu(\Phi_g(w))}{h(w^*)^2}\right),\end{aligned}$$

  where the second inequality is by plugging in (5.77), and the last line follows from the fact that $h(w) \leq [0, 1]$ and from the definition of $\Phi_g(w)$. This proves self-bounding regularity conditions for $\nabla\Phi_g(w)$

- For the second term in (5.78), using Cauchy-Schwarz inequality, we have

$$\begin{aligned}\frac{2}{h(w)^2}\|\nabla\Gamma(w)\nabla h(w)^\top\| &\leq \frac{2}{h(w)^2}\|\nabla\Gamma(w)\|\|\nabla h(w)\| \\ &\leq 2\lambda(\Gamma(w)) \cdot \pi(\Gamma(w)) \cdot \left(\frac{2}{h(w^*)} + \frac{\mu(\Phi_g(w))}{h(w^*)^2}\right)^2 \\ &\leq 2\lambda(\Phi_g(w)) \cdot \pi(\Phi_g(w)) \cdot \left(\frac{2}{h(w^*)} + \frac{\mu(\Phi_g(w))}{h(w^*)^2}\right)^2\end{aligned}$$

  where the second inequality holds because $\|\nabla\Gamma(w)\| \leq \lambda(\Gamma(w))$ and $\|\nabla h(w)\| \leq \pi(\Gamma(w))$, and the last inequality follows from the definition of $\Phi_g(w)$ and the fact that $h(w) \leq 1$.

- For the third term in (5.78), using the relation $\|\nabla h(w)\| \leq \pi(\Gamma(w))$, we get

$$\begin{aligned}\frac{\Gamma(w)}{h(w)^3}\|\nabla h(w)\|^2 &= \frac{\Gamma(w)}{h(w)} \cdot \frac{1}{h(w)^2} \cdot \pi^2(\Gamma(w)) \\ &\leq \Phi_g(w) \cdot \left(\frac{2}{h(w^*)} + \frac{\mu(\Phi_g(w))}{h(w^*)^2}\right)^2 \cdot \pi^2(\Phi_g(w)),\end{aligned}$$

  where the last line uses the definition of Φ_g, the fact that π is positive and monotonically increasing, $h(w) \leq 1$, and the bound in (5.77).

- For the fourth term in (5.78), using the relation $\|\nabla^2 h(w)\| \leq \pi(\Gamma(w))$, we get

$$\begin{aligned}\frac{\Gamma(w)}{h(w)^2}\|\nabla^2 h(w)\| &\leq \frac{\Gamma(w)}{h(w)} \cdot \frac{1}{h(w)} \cdot \pi(\Gamma(W)) \\ &\leq \Phi_g(w) \cdot \left(\frac{2}{h(w^*)} + \frac{\mu(\Phi_g(w))}{h(w^*)^2}\right) \cdot \pi(\Phi_g(w))\end{aligned}$$

  where the last line uses the definition of Φ_g, the fact that π is positive and monotonically increasing and the fact that $h(w) \leq 1$, and the bound in (5.77).

Clearly, each of the bounds above consists of a positive, monotonically increasing function on the right hand side, thus proving self-bounding regularity conditions for $\nabla^2 \Phi_g(w)$.

□

5.4.7 Matrix Square root

For any symmetric $W \in \mathbb{R}^{d\times d}$, the population loss for matrix square root problem is given by[4]

$$F(W) = \|W^2 - M\|_F^2, \tag{5.79}$$

where M is a positive-definite matrix. Note that the global minima of the above objective is obtained at $W = \sqrt{M}$.

The following technical lemma establishes some useful properties of F.

Lemma 46. *The function F given in (5.79) satisfies for any W,*

(*a*) $\nabla F(W) = 2(2W^3 - MW - WM)$,

(*b*) $\|\nabla F(W)\|_F^2 \geq 16\sigma_d(W^2)F(W)$,

where $\sigma_d(W)$ denotes the minimum singular value of W.

Proof. (*a*) The relation follows from Chain rule.

(*b*) The proof is identical to the proof of Jain et al. (2017a, Lemma 4.5). Note that

$$\begin{aligned}\langle \nabla F(W), \nabla F(W)\rangle &= 4\big\langle (W^2 - M)W + W(W^2 - M), (W^2 - M)W + W(W^2 - M)\big\rangle \\ &\geq 16\sigma_d(W^2)F(W).\end{aligned}$$

□

[4]Following the convention, we denote matrix valued variables throughout this section using capital Roman aphabet.

Rate of convergence for gradient flow

We first note the following technical lemma whose proof is identical to the proof of Jain et al. (2017a, Lemma 4.2) as $\eta \to 0$.

Lemma 47 (Jain et al. (2017a, Lemma 4.2))**.** *For any initial point W_0 and $t \geq 0$, the point $W(t)$ on the gradient flow path with $W(0) = W_0$ satisfies*

$$\sigma_d(W(t)^2) \geq \min\left\{\sigma_d(W_0^2), \frac{\sigma_d(M)}{100}\right\}.$$

Before providing a rate of convergence for GF for the matrix square root problem, we first define additional notation. Let $\alpha = \sigma_d(M)/1600$, and define the function

$$\phi(Z) = \frac{-1}{\gamma}\log(\mathrm{tr}(e^{-\gamma Z}) + e^{-16\alpha\gamma}), \tag{5.80}$$

and the function

$$h(W) = \sigma\big(\phi(W^2) - \alpha\big), \tag{5.81}$$

where σ denotes a smoothened version of the indicator function and is given by

$$\sigma(z) := \begin{cases} 0 & \text{if} \quad z \leq 0 \\ \frac{2}{\alpha^2}z^2 & \text{if} \quad 0 \leq z \leq \alpha/2 \\ -\frac{2}{\alpha^2}z^2 + \frac{4}{\alpha}z - 1 & \text{if} \quad \alpha/2 \leq z \leq \alpha \\ 1 & \text{if} \quad \alpha \leq z \end{cases}. \tag{5.82}$$

The following technical lemma establishes some useful properties of the function ϕ and h.

Lemma 48. *Let $\gamma > 0$. For any point W, we have*

(*a*) $\min\{\sigma_d(W^2), 16\alpha\} - \frac{\log(d+1)}{\gamma} \leq \phi(W^2) \leq \min\{\sigma_d(W^2), 16\alpha\}$.

(b) $\nabla_W \phi(W) = \frac{e^{-\gamma W}}{tr(e^{-\gamma W})+e^{-16\gamma\alpha}}$ *and* $\nabla_W \phi(W^2) = \frac{2e^{-\gamma W^2}W}{tr(e^{-\gamma W^2})+e^{-16\gamma\alpha}}$.

(c) $\Big(h(W) - h(\sqrt{M})\Big)^2 \leq \frac{2}{\alpha}F(W)$.

(d) $\|\nabla h(W)\| \leq \frac{4}{\alpha}\Big(F(W)^{1/4} + \sqrt{\|M\|}\Big)$.

(e) $\|\nabla^2 h(W)\| \leq 16\big(\frac{2}{\alpha^2} + \frac{1}{\alpha}\big)\Big(1 + \gamma\|M\| + \gamma\sqrt{F(W)}\Big)$.

(f) *if* $F(W) \leq \sigma_d(M)^2/4$, *then* W *must satisfy* $\sigma_d(W^2) \geq 800\alpha$. *Furthermore, if* $\gamma \geq \frac{\log(d+1)}{\gamma}$, *the* W *satisfies* $h(W) = 1$.

where $\alpha = \sigma_d(M)/1600$.

Proof. We prove each part separately below:

(a) For the upper bound, note that

$$\begin{aligned}
\phi(W^2) &= \frac{-1}{\gamma}\log(\sum_{i=1}^{d} e^{-\gamma\sigma_i(W^2)} + e^{-16\alpha\gamma}) \\
&\leq \frac{-1}{\gamma}\log(\min\Big\{e^{-\gamma\sigma_d(W^2)}, e^{-16\alpha\gamma}\Big\}) \\
&= \min\big\{\sigma_d(W^2), 16\alpha\big\},
\end{aligned}$$

where the inequality in the second line holds because $-\log(z)$ is a decreasing function of z.

For the lower bound, again using monotonicity of the function $-\log(z)$, we get that

$$\begin{aligned}
\phi(W^2) &= \frac{-1}{\gamma}\log(\sum_{i=1}^{d} e^{-\gamma\sigma_i(W^2)} + e^{-16\alpha\gamma}) \\
&\geq \frac{-1}{\gamma}\log((d+1)e^{-\gamma\min\{\sigma_d(W^2),16\alpha\}}) \\
&\geq \min\big\{\sigma_d(W^2), 16\alpha\big\} - \frac{\log(d+1)}{\gamma}.
\end{aligned}$$

(*b*) The proof is a straightforward application of the Chain rule for matrix derivatives.

(*c*) Since σ is $2/\alpha$-Lipschitz, we have that

$$\begin{aligned}
(h(W) - h(\sqrt{M}))^2 &= \big(\sigma(\phi(W^2) - \alpha) - \sigma(\phi(M) - \alpha)\big)^2 \\
&\leq \frac{2}{\alpha}\big(\phi(W^2) - \phi(M)\big)^2 \\
&\leq \frac{2}{\alpha} \sup_{\substack{t\in[0,1] \\ Z = Mt + (1-t)W^2}} \|\nabla_Z \phi(Z)\|_F^2 \cdot \|W^2 - M\|_F^2 \\
&= \frac{2}{\alpha} \sup_{\substack{t\in[0,1] \\ Z = Mt + (1-t)W^2}} \left\| \frac{e^{-\gamma Z}}{\mathrm{tr}(e^{-\gamma Z}) + e^{-16\gamma\alpha}} \right\|_F^2 \cdot \|W^2 - M\|_F^2 \\
&\leq \frac{2}{\alpha}\|W^2 - M\|^2 = \frac{2}{\alpha} F(W),
\end{aligned}$$

where the inequality in the third line above holds due to Fundamental theorem of calculus and using Cauchy-Schwarz. The inequality is due to the fact that the first term in the product is always smaller than 1.

(*d*) Using Chain rule for matrix derivatives, we get that

$$\begin{aligned}
\|\nabla h(W)\| &= \sigma'(\phi(W^2) - \alpha)\|\nabla_W \phi(W^2)\| \\
&\leq \frac{2}{\alpha}\|\nabla_W \phi(W^2)\| \\
&= \frac{2}{\alpha} \cdot \left\| \tfrac{2e^{-\gamma W^2} W}{\mathrm{tr}(e^{-\gamma W^2}) + e^{-16\gamma\alpha}} \right\| \\
&\leq \frac{4}{\alpha} \cdot \left\| \tfrac{e^{-\gamma W^2}}{\mathrm{tr}(e^{-\gamma W^2}) + e^{-16\gamma\alpha}} \right\| \|W\|,
\end{aligned}$$

where the first inequality is due to the fact that $\sigma'(z) \leq 2/\alpha$, the equality in the third line is from plugging in the form of $\nabla_W \phi(W^2)$, and the last inequality is due to Cauchy-Schwarz. Using that fact that $\left\| \frac{e^{-\gamma W^2}}{\mathrm{tr}(e^{-\gamma W^2}) + e^{-16\gamma\alpha}} \right\| \leq 1$ and that

$$\|W\| = \sqrt{\|W^2\|} \leq \sqrt{\|W^2 - M\| + \|M\|} \leq \sqrt{\|W^2 - M\|_F + \|M\|} = \sqrt{\sqrt{F(W)} + \|M\|}$$

in the above, we get that

$$\|\nabla h(W)\| \leq \frac{4}{\alpha}\Big(F(W)^{1/4} + \sqrt{\|M\|}\Big).$$

(e) Using Chain rule for matrix derivatives and Triangle Inequality, we get that

$$\begin{aligned}
\|\nabla^2 h(W)\| &\leq 4\gamma\big(\sigma''(\phi(W^2)-\alpha) + \sigma'(\phi(W^2)-\alpha)\big)\left\|\frac{e^{-\gamma W^2}W}{\mathrm{tr}(e^{-\gamma W^2}) + e^{-16\gamma\alpha}}\right\|^2 \\
&\quad + 2\sigma'(\phi(W^2)-\alpha)\left(\left\|\frac{e^{-\gamma W^2}}{\mathrm{tr}(e^{-\gamma W^2}) + e^{-16\gamma\alpha}}\right\| + 2\gamma\left\|\frac{W^2 e^{-\gamma W^2}}{\mathrm{tr}(e^{-\gamma W^2}) + e^{-16\gamma\alpha}}\right\|\right) \\
&\leq 4\gamma\big(\sigma''(\phi(W^2)-\alpha) + \sigma'(\phi(W^2)-\alpha)\big)\big\|W^2\big\| + 2\sigma'(\phi(W^2)-\alpha)\big(1 + 2\gamma\|W^2\|\big) \\
&\leq 16\left(\frac{2}{\alpha^2} + \frac{1}{\alpha}\right)\big(1 + \gamma\|W^2\|\big),
\end{aligned}$$

where the second inequality above follows from Cauchy-Schwarz inequality, using the fact that $\left\|\frac{e^{-\gamma W^2}}{\mathrm{tr}(e^{-\gamma W^2})+e^{-16\gamma\alpha}}\right\| \leq 1$ and from the observation that W is symmetric PD. Using the fact that

$$\|W^2\| \leq \|W^2 - M\| + \|M\| \leq \|W^2 - M\|_F + \|M\| = \sqrt{F(W)} + \|M\|$$

in the above, we get that

$$\|\nabla^2 h(W)\| \leq 16\left(\frac{2}{\alpha^2} + \frac{1}{\alpha}\right)\Big(1 + \gamma\|M\| + \gamma\sqrt{F(W)}\Big).$$

(f) We note that

$$\big|\sigma_d(W^2) - \sigma_d(M)\big|^2 \leq \|W^2 - M\|^2 \leq \|W^2 - M\|_F^2 = F(W).$$

Thus, for any W for which $F(W) \leq (\sigma_d(M)/2)^2$, the above implies that

$$\frac{\sigma_d(M)}{2} \leq \sigma_d(W^2) \leq \frac{3\sigma_d(M)}{2}.$$

The final bound follows by noting that $\sigma_d(M) = 1600\kappa$. Furthermore, if $\gamma \geq \frac{\log(d+1)}{\gamma}$, then we have that

$$\phi(W^2) - \alpha \geq 14\alpha,$$

which implies that $h(W) = 1$.

□

We next provide a rate of convergence for gradient flow on the matrix square root problem, when the initialization is well behaved.

Lemma 49 (Lemma 28 in the main body)**.** *Consider the objective function F given in (5.79). Then, for any initial point $W(0) = W_0$ for which $h(W_0) > 0$, where h is given in (5.81), the point $w(t)$ on its gradient flow path satisfies*

$$F(W(t)) \leq \widetilde{R}(W_0, t) := F(W_0)\exp(-16\alpha t).$$

Proof. Due to chain rule, we have that

$$\begin{aligned}
\frac{\mathrm{d}F(W(t))}{\mathrm{d}t} &= \left\langle \nabla F(W(t)), \frac{\mathrm{d}W(t)}{\mathrm{d}t} \right\rangle \\
&= -\|\nabla F(W(t))\|_F^2 && (\text{since } \tfrac{\mathrm{d}W(t)}{\mathrm{d}t} = -\nabla F(W(t))) \\
&\leq -16\sigma_d(W(t)^2)F(W(t)) && (\text{using Lemma 46-(b)} \\
&\leq -16\min\left\{\sigma_d(W_0^2), \frac{\sigma_d(M)}{100}\right\}F(W(t)). && (\text{using Lemma 47})
\end{aligned}$$

Noting that $F(W(t)) > 0$, rearranging both the sides and integrating with respect to t, we get that

$$\int_{\tau=0}^{t} \frac{1}{F(w(\tau))}\,\mathrm{d}F(W(\tau)) \leq -16\min\left\{\sigma_d(W_0^2), \frac{\sigma_d(M)}{100}\right\}\int_{\tau=0}^{t}\mathrm{d}t.$$

The above implies that

$$\begin{aligned}
F(W(t)) &\leq F(W(0))\exp\left(-16t\min\left\{\sigma_d(W_0^2), \frac{\sigma_d(M)}{100}\right\}\right) \\
&\leq F(W_0)\exp(-16\alpha t),
\end{aligned}$$

where the second line above holds since

$$\min\left\{\sigma_d(W_0^2), \frac{\sigma_d(M)}{100}\right\} \geq \phi(W_0^2) \geq \alpha,$$

where the first inequality is due to Lemma 48-(a) and the second inequality holds because $\phi(W_0^2) > \alpha$ since $h(W_0) > 0$. $\square$

Note that the rate in Lemma 49 holds for any W for which $h(W) > 0$. However, we can extend the above to define a rate function that holds for any W. Define

$$R(W,t) = \widetilde{R}(W, t \cdot h(W)) = F(W)e^{-16\alpha h(W)},$$

and note that for any point W_0, the GF path from W_0 satisfies $F(W(t)) \leq R(W_0, t)$. The proof is straightforward: when W is such that $h(W) = 0$, the condition reduces to showing that $F(w(t)) \leq \widetilde{R}(W_0, 0) = F(W_0)$ which holds for any GF path (Lemma 31). On the other hand, when W_0 is such that $0 < h(W_0) \leq 1$, we have that $F(W(t)) \leq \widetilde{R}(W_0, t) \leq \widetilde{R}(W_0, t \cdot h(W)) = R(W,t)$ since R is monotonically decreasing in W.

In the following lemma, we show that the function R is in-fact an admissible rate of convergence w.r.t. F, albeit under mild conditions on γ.

Lemma 50. *Let $\gamma \geq \log(d+1)/\alpha$. Consider the function R defined as*

$$R(w,t) = F(W)e^{-16\alpha t h(W)},$$

where h is given in (5.81). Then, R is an admissible rate of convergence w.r.t. F.

Proof. Recall that a sufficient conditions for a rate function R to be admissible w.r.t. F is that for any point W,

$$\int_{t=0}^{\infty} \Big(\frac{\partial R(W,t)}{\partial t} + \langle \nabla_W R(W,t), \nabla F(W) \rangle \Big) \, \mathrm{d}t \geq 0. \tag{5.83}$$

We note that

$$\int_{t=0}^{\infty} \frac{\partial R(W,t)}{\partial t} \, \mathrm{d}t = R(W,\infty) - R(W,0) = -F(W)\mathbf{1}\{h(W) > 0\},$$

and due to Chain rule,

$$\int_{t=0}^{\infty} \langle \nabla_w R(w,t), \nabla F(W) \rangle \, \mathrm{d}t = \frac{\|\nabla F(W)\|^2}{16\alpha h(W)} - F(W) \frac{\langle \nabla h(W), \nabla F(W) \rangle}{16\alpha h(W)^2}.$$

Taking the two terms together and rearranging, the condition in (5.83) is equivalent to

$$\|\nabla F(W)\|^2 \geq 16\alpha h(W) F(W) \mathbf{1}\{h(W) > 0\} + \frac{F(W)}{16\alpha h(W)^2} \langle \nabla h(W), \nabla F(W) \rangle, \tag{5.84}$$

Recall that $h(W) = \sigma(\phi(W^2) - \alpha)$. In the following, we show that the above relation holds for any PD matrix W, thus showing that R is an admissible rate of convergence w.r.t. F. We divide the proof into the following cases:

- *Case 1: when* $\phi(W^2) \leq \alpha$. In this case, both $h(W) = 0$ and $\nabla h(W)/h(W) = 0$ (by definition) and thus the condition in (5.84) is trivially satisfied.
- *Case 2: when* $\phi(W^2) \geq 2\alpha$. In this case, $h(W) = 1$ but $\nabla h(W)/h(W) = 0$ (by definition) and thus the condition in (5.84) reduces to showing that $\|\nabla F(W)^2\| \geq 16\alpha F(W)$, which holds due to Lemma 46-(b) and the fact that $h(W) \geq 2\alpha$ implies that $\sigma_d(W) \geq 2\alpha$ (due to Lemma 48-(a)).
- *Case 3: when* $\alpha \leq \phi(W^2) \leq 2\alpha$. We first show that in this case,

  $$\alpha \leq \sigma_d(W^2) \leq 16\alpha. \tag{5.85}$$

  The first inequality holds due to Lemma 48-(a) which implies that $\sigma_d(W^2) \geq \phi(W^2) \geq \alpha$. The second inequality can be proved via contradiction. Suppose that $\sigma_d(W) \geq 16\alpha$, then again due to Lemma 48-(a), we must have that for any $\gamma \geq \log(d+1)/\alpha$,

  $$\phi(W^2) \geq \min\{\sigma_d(W^2), 16\alpha\} - \frac{\log(d+1)}{\gamma}$$

$$\geq 16\alpha - \frac{\log(d+1)}{\gamma} \geq 15\gamma,$$

which contradicts the fact that $\phi(W^2) \leq 2\alpha$. Thus, (5.85) holds. We next argue that under (5.85),

$$\langle \nabla_W h(W), \nabla F(W) \rangle \leq 0. \tag{5.86}$$

Note that

$$\begin{aligned}\langle \nabla_W h(W), \nabla F(W) \rangle &= \sigma'(\phi(W^2) - \alpha) \langle \nabla_W \phi W^2, \nabla F(W) \rangle \\ &= \frac{\sigma'(\phi(W^2) - \alpha)}{\mathrm{tr}(e^{-\gamma W^2}) + e^{-4\gamma\alpha}} \langle e^{-\gamma W^2} W, \nabla F(W) \rangle,\end{aligned}$$

where there the second equality follows from Lemma 48. Next, observe that $\sigma'(\phi(W^2) - \alpha)$ and $\mathrm{tr}(e^{-\gamma W^2}) + e^{-4\gamma\alpha}$ are both non-negative. Thus, to show (5.86), it suffices to show that $\langle e^{-\gamma W^2} W, \nabla F(W) \rangle \leq 0$. Note that

$$\begin{aligned}\langle e^{-\gamma W^2} W, \nabla F(W) \rangle &= 2\langle e^{-\gamma W^2} W, 2W^3 - MW - WM \rangle \\ &= 2\mathrm{tr}(e^{-\gamma W^2} W \big(2W^3 - MW - WM\big)) \\ &\overset{(i)}{=} 4\Big(\mathrm{tr}(e^{-\gamma W^2} W^4) - \mathrm{tr}(e^{-\gamma W^2} W^2 M)\Big) \\ &\overset{(ii)}{\leq} 4\Big(\mathrm{tr}(e^{-\gamma W^2} W^4) - \sigma_d(M)\mathrm{tr}(e^{-\gamma W^2} W^2)\Big) \\ &= 4\Big(\mathrm{tr}(e^{-\gamma W^2} W^4) - 1600\alpha\mathrm{tr}(e^{-\gamma W^2} W^2)\Big),\end{aligned}$$

where (i) holds because $\mathrm{tr}(AB) = \mathrm{tr}(BA)$ and because the matrices $e^{-\gamma W^2}$ and W commute. The inequality (ii) follows from the fact that for PD matrices A, B, we have $\sigma_d(B)\mathrm{tr}(A) \leq \mathrm{tr}(AB) \leq \sigma_d(B)\mathrm{tr}(A)$ (Fang et al., 1994, Inequality-(1)). The last line uses the fact that $\alpha = \sigma_d(M)/1600$. For the ease of notation, let β_i denote the i-th largest singular value of W. Since W is symmetric PD, we note that the term in the RHS above can be further simplified as

$$\mathrm{tr}(e^{-\gamma W^2} W^4) - 1600\alpha\mathrm{tr}(e^{-\gamma W^2} W^2)$$

$$
\begin{aligned}
&= \sum_{i=1}^{d} \Big(e^{-\gamma\beta_i^2} \beta_i^2 (\beta_i^2 - 1600\alpha) \Big) \\
&\overset{(iii)}{\leq} \sum_{i \in \mathcal{I}} \Big(e^{-\gamma\beta_i^2} \beta_i^2 (\beta_i^2 - 1600\alpha) \Big) + e^{-\gamma\beta_d^2} \beta_d^2 (\beta_d^2 - 1600\alpha) \\
&\overset{(iv)}{\leq} \sum_{i \in \mathcal{I}} e^{-\gamma\beta_i^2} \beta_i^4 - 1584 e^{-\gamma\alpha} \alpha^2,
\end{aligned}
$$

where in (iii), the set $\mathcal{I} := \{1 \leq i \leq d-1 \mid \beta_i^2 \geq 1600\alpha\}$ consists of all the indices upto $d-1$ for the corresponding term in the sum is positive. (iv) follows by ignoring negative term and using (5.85). For the first term in the RHS above, using the fact that for $\beta_i \geq 1600\alpha$ and $\gamma \geq \log(d)/\alpha$, we have

$$
e^{-\gamma\beta_i^2} \beta_i^4 \leq e^{-800\gamma\alpha} \alpha^2
$$

which implies that

$$
\mathrm{tr}(e^{-\gamma W^2} W^4) - 1600\alpha \mathrm{tr}(e^{-\gamma W^2} W^2) \leq (d-1)\alpha^2 e^{-800\gamma\alpha} - 1584 e^{-\gamma\alpha} \alpha^2 \leq 0,
$$

where the last inequality holds for any $\gamma \geq \log(d)/\alpha$.

Combining all the above bounds implies that $\langle \nabla h(W), \nabla F(W) \rangle \leq 0$, and thus (5.84) reduces to showing that $\|\nabla F(W)^2\| \geq 16\alpha h(W) F(W)$, which holds due to Lemma 46-(b) and because $h(W) \leq 1$.

□

Potential function and self-bounding regularity conditions

We first establish the self-bounding regularity conditions for F.

Lemma 51. *For any symmetric and positive definite W, the function F given in (5.79) satisfies*

$$
\|\nabla F(W)\| \leq \|\nabla F(W)\|_F \leq 2F(W)^{3/4} + 2\sqrt{\|M\| F(W)},
$$

and

$$\|\nabla^2 F(W)\| \leq 6\sqrt{F(W)} + 8\|M\|.$$

Proof. Since $\nabla F(W) = (W^2 - M)W + W(W^2 - M)$, we have

$$\begin{aligned}\|\nabla F(W)\|_F^2 &\leq 2\|(W^2 - M)W\|_F^2 + 2\|W(W^2 - M)\|_F^2 \\ &\leq 4\sigma_{\max}(W)^2\|W^2 - M\|_F^2 \\ &\leq 4\sigma_{\max}(W^2)F(W),\end{aligned}$$

where the last line holds because W is symmetric and positive definite which implies that $\sigma_{\max}(W)^2 = \sigma_{\max}(W^2)$, and from the definition of $F(W)$. Using the fact that $\sigma_{\max}(W^2) \leq \sigma_{\max}(W^2 - M) + \sigma_{\max}(M) \leq \|W^2 - M\|_F + \|M\| = \sqrt{F(W)} + \|M\|$, we get

$$\|\nabla F(W)\|_F^2 \leq 4F(W)^{3/2} + 4\sigma_{\max}(M)F(W),$$

which implies that

$$\|\nabla F(W)\|_F \leq 2F(W)^{3/4} + 2\sqrt{\|M\|F(W)}.$$

For the bound on $\|\nabla^2 F(W)\|$, note that using Chain rule and Triangle inequality, we have

$$\|\nabla^2 F(W)\| \leq 6\|W^2\| + 2\|M\| \leq 6\|W^2 - M\| + 8\|M\| = 6\sqrt{F(W)} + 8\|M\|.$$

□

We define the admissible potential function using Lemma 27. First recall the definition of h that

$$h(W) = \sigma\big(\phi(W^2) - \alpha\big),$$

here ϕ is given in (5.80) and σ is given in (5.82). Next, recall Lemma 49 which shows that for any initial point $W(0) = W_0$ for which $h(W_0) > 0$, the point $w(t)$ on its gradient flow path satisfies

$$F(W(t)) \leq F(W_0)\exp(-16\alpha t) =: R(W_0, t).$$

Clearly, as shown in Lemma 50, the function $R(W, h(W)t)$ is an admissible rate of convergence w.r.t. F. We next note that the function F is minimized at the point $W^* = \sqrt{M}$ and establish the following properties:

(a) The function $\Gamma(W) := \int_{t=0}^{\infty} R(W,t)\,\mathrm{d}t$ is continuously differentiable, and $\max\{\|\nabla\Gamma(W)\|, \|\nabla^2\Gamma(W)\|\} \leq \lambda(\Gamma(W))$ where λ is a positive, monotonically increasing function.

(b) $\max\{\|\nabla h(W)\|, \|\nabla^2 h(W)\|\} \leq \pi(\Gamma(W))$ where π is a positive, monotonically increasing function.

(c) $(h(W) - h(W^*))^2 \leq \mu(\Gamma(W))$ where μ is a positive, monotonically increasing function with the property that $k\mu(z) \leq \mu(kz)$ for any $k \geq 1$.

Proof of properties (a)-(c) above.

(a) Note that

$$\Gamma(w) = \int_{t=0}^{\infty} R(w,t)\,\mathrm{d}t = \frac{F(W)}{16\alpha}.$$

Thus, following the bound in Lemma 51, we note that

$$\|\nabla\Gamma(W)\| \leq 2\Gamma(W)^{3/4} + 2\sqrt{\|M\|\Gamma(W)},$$

and

$$\|\nabla^2\Gamma(W)\| \leq 6\sqrt{\Gamma(W)} + 8\|M\|.$$

Thus, we can define the function λ such that $\lambda(z) = O(z^{3/4} + \|M\| + 1)$, which is clearly positive and monotonically increasing.

(b) From Lemma 48-(d) and (e), we note that

$$\|\nabla h(W)\| \leq \frac{4}{\alpha}\Big(F(W)^{1/4} + \sqrt{\|M\|}\Big).$$

and

$$\|\nabla^2 h(W)\| \leq 16\left(\frac{2}{\alpha^2} + \frac{1}{\alpha}\right)\Big(1 + \gamma\|M\| + \gamma\sqrt{F(W)}\Big).$$

Thus, we define the function

$$\begin{aligned}\pi(z) &= \frac{4}{\alpha}\Big((16\alpha z)^{1/4} + \sqrt{\|M\|}\Big) + 16\left(\frac{2}{\alpha^2} + \frac{1}{\alpha}\right)\Big(1 + \gamma\|M\| + \gamma\sqrt{16\alpha z}\Big) \\ &= O\left(\left(\frac{1}{\alpha^2} + \frac{1}{\alpha}\right)\Big(1 + \gamma\|M\| + \gamma\sqrt{16\alpha z}\Big)\right),\end{aligned}$$

where the second line follows from recursive applications of AM-GM inequality. We note that the function π above is positive and monotonically increasing.

(c) From Lemma 48-(c), we note that

$$(h(w) - h(\sqrt{M}))^2 \leq \frac{2}{\alpha}F(w) = 32\Gamma(w).$$

Thus, we can define the function $\mu(z) = 32z$ which clearly satisfies the desired properties.

□

Thus, all the required conditions in Lemma 27 are satisfied which implies that the function

$$\Phi(w) = \frac{\Gamma(w)}{h(w)} = \frac{F(w)}{16\alpha\sigma(\phi(W^2) - \alpha)} \tag{5.87}$$

is an admissible potential function w.r.t. F with $g(z) = z$. Furthermore, following the proof of Lemma 27, we note that the function Φ satisfies the following self-bounding regularity condition

$$\|\nabla^2 \Phi(w)\| \leq \rho(\Phi(w)),$$

where the function ρ is given by

$$\rho(z) = (\lambda(z) + z\pi(z)) \cdot \left(\frac{2}{h(W^*)} + \frac{\mu(z)}{h(W^*)^2}\right) + \big(2\lambda(z) \cdot \pi(z) + z\pi^2(z)\big) \cdot \left(\frac{2}{h(W^*)} + \frac{\mu(z)}{h(W^*)^2}\right)^2.$$

Using the fact that $\lambda(z) = O(z^{3/4} + \|M\| + 1)$, $\mu(z) = 32z$ and $\pi(z) = O\big(\big(\frac{1}{\alpha^2} + \frac{1}{\alpha}\big)\big(1 + \gamma\|M\| + \gamma\sqrt{16\alpha z}\big)\big)$ in the above, and repeatedly applying AM-GM, we get that

$$\rho(z) = O\left((1+\gamma)^2(1+\|M\|)^2\left(\frac{2}{h(W^*)} + \frac{1}{h(W^*)^2}\right)^2\big(1 + z^4\big)\right). \tag{5.88}$$

GD for matrix square root

In the following, we provide the convergence guarantee for GD algorithm. We first define the respective problem dependent quantities and instantiate Theorem 26 to provide a $O(1/T)$ convergence bound for GD. We then provide a refined analysis which improves this bound to $O(e^{-T})$.

$O(1/T)$ rate by direct application of Theorem 26.

- Lemma 27 implies the potential function

$$\Phi_g(w) = \frac{F(w)}{16\alpha\sigma(\phi(W^2) - \alpha)}$$

  with $g(z) = z$. See Section 5.4.7 for more details.

- Assumption 5 follows from Lemma 51 which implies that

$$\psi(z) = 4z^{3/2} + 4\|M\|z.$$

- Assumption 6 follows from (5.88) which implies that

$$\begin{aligned}\rho(z) &= O\left((1+\gamma)^2(1+\|M\|)^2\left(\frac{2}{h(W^*)} + \frac{1}{h(W^*)^2}\right)^2(1+z^4)\right)\\ &= L(1+z^4),\end{aligned}$$

  where we defined L to hide the constants and the problem dependent terms.

- The function θ is given by $\theta(z) = \int_{y=0}^{z} \frac{1}{\rho(y)}\,\mathrm{d}y$.

- The function ζ is defined such that

$$\zeta^{-1}(z) = \int_{y=0}^{z} \frac{g(y)}{\psi(y)}\,\mathrm{d}y = \int_{y=0}^{z} \frac{1}{4\sqrt{y} + 4\|m\|}\,\mathrm{d}y.$$

We note that $\frac{\psi(z)}{g(z)} = 4\sqrt{z} + 4\|M\|$ is a monotonically increasing function of z. Thus, using Theorem 26, we get that setting η appropriately, GD converges at the rate of

$$\begin{aligned}F(\widehat{w}_T) &\leq \frac{2\theta(\Phi_g(w_0))\psi(\zeta(\Phi_g(w_0)))\rho^2(\Phi_g(w_0))}{g(\zeta(\Phi_g(w_0)))} \cdot \frac{1}{T}\\ &= \frac{\nu(w_0)}{T},\end{aligned} \tag{5.89}$$

where the problem dependent constants can be computed by plugging in the definitions provided above, and the function ν is defined to contain all the problem dependent parameters in the right hand side above.

$O(e^{-T})$ rate via a refined analysis. We can further improve over the rate in (5.89) by a refined analysis for GD. In the following, we will show that GD in fact

enjoys a $e^{-O(T-t_0)}$ rate of convergence for GD for all $T \geq t_0$, where t_0 depends on w_0 and problem dependent parameters specified below.

Before delving into the proof of the above, we first provide the relevant improved version of problem dependent parameters that hold for any w for which $F(w) \leq \left(\frac{\sigma_d(M)}{2}\right)^2$:

- We first note that $\sigma(\phi(W^2) - \alpha) = 1$.
- Thus, Lemma 27 implies the potential function

$$\Phi_g(w) = \frac{F(w)}{16\alpha}$$

  with $g(z) = z$.
- Assumption 5 follows from Lemma 51 which implies that

$$\psi(z) = 8\|M\|z,$$

  since the above bound is only used when $z \leq \|W\|/2$.
- Assumption 6 follows from (5.88) which implies that

$$\rho(z) = O\left((1+\gamma)^3(1+\|M\|)^6\left(\frac{2}{h(W^*)} + \frac{1}{h(W^*)^2}\right)^2\right) =: \bar{L},$$

  since the above bound is only used when $z = \Phi(w) \leq 800^2\alpha$.
- The function θ is given by

$$\theta(z) = \int_{y=0}^{z} \frac{1}{\rho(y)}\,\mathrm{d}y = \frac{z}{\bar{L}} \tag{5.90}$$

We are now ready to provide the improved convergence rate for GD. Note that using (5.89), we have that there exists some

$$t_0 \leq 8\nu(w_0)/\sigma_d(M)^2 \tag{5.91}$$

such that $F(w_{t_0}) \leq \sigma_d(M)^2/8$. Using Lemma 48-(f), the above implies that $h(w_{t_0}) = 1$. In the following, we will show via induction that $F(w_t) \leq \sigma_d(M)^2/8$ and $h(w_t) = 1$ for all $t \geq t_0$. The base case with $t = t_0$ is shown above. For the induction step, consider any $t \geq t_0$ and assume that $F(w_t) \leq \sigma_d(M)^2/8$ and $h(w_t) = 1$; we will show that the same holds for w_{t+1}. Starting from (5.36) in the proof of Theorem 26, we note that

$$\theta(\Phi(w_{t+1})) \leq \theta(\Phi(w_t)) - \frac{\eta}{2\rho(\Phi(w_0))} g(F(w_t))).$$

However, note that w_t satisfies $F(w_t) \leq \sigma_d(M)^2/8$ and $h(w_t) = 1$. Since, each update of GD is of magnitude at most η , we also have that $F(w_{t+1}) \leq \sigma_d(M)^2/4$ and thus $h(w_{t+1}) = 1$. Thus, plugging the forms of θ, ρ, Φ and g from (5.91), we get that

$$F(w_{t+1}) \leq F(w_t)\left(1 - \frac{8\alpha\eta}{\bar{L}}\right). \tag{5.92}$$

The above clearly implies that $F(w_{t+1}) \leq F(w_t) \leq \sigma_d(M)^2/8$ and thus $h(w_{t+1}) = 1$. This completes the induction step.

Now, in order to complete the proof of convergence, note that (5.92) will hold for all $t \geq t_0$, recursing which implies that

$$F(w_t) \leq F(w_{t_0))}\left(1 - \frac{8\alpha\eta}{\bar{L}}\right)^{t-t_0} \leq F(w_{t_0)} e^{-\frac{8\alpha\eta(t-t_0)}{\bar{L}}} \leq \sigma_d(M)^2/8 e^{-\frac{8\alpha\eta(t-t_0)}{\bar{L}}}.$$

SGD for matrix square root

We build on the problem dependent quantities introduced in Section 5.4.7. Suppose SGD is run with stochastic gradient estimates that satisfy Assumption 7 with $\chi(z) = \sigma^2$. Such a bound is satisfied in the classical stochastic optimization setting in which $\nabla f_{\text{ms}}(w; z) = 2(W^2 - M)W + 2W(W^2 - M) + \varepsilon_t$ where ε_t is a sub-Gaussian

random variable with mean 0 and variance σ^2. Using the above, we define the function Λ used in Theorem 27 as

$$\Lambda(z) = 12\sqrt{z} + 8\|M\| + \sigma^2.$$

Fixing any $\bar{w}$ such that $F(\bar{w}) \geq F(w_0)$, and define $B = \Lambda(\zeta(\Phi(\bar{w})))$. Thus, Theorem 27 (in particular the bound in Remark 5) implies that with probability at least 0.7, the point $\widehat{w}_T$ returned by SGD algorithm satisfies for any $\kappa > 1$,

$$g(F(\widehat{w}_T)) \lesssim \rho(\Phi(\bar{w}))\sqrt{B\theta(\Phi(w_0))} \cdot \frac{1}{\sqrt{T}}.$$

5.4.8 Extending Chatterjee (2022)

Given a function $r : \mathbb{R}^d \mapsto \mathbb{R}^+$ and a monotonically increasing, positive function g, define

$$\alpha_{r,g}(w_0, \kappa) = \inf_{w:\|w-w_0\|_2 \le \kappa, F(w) \neq 0} \frac{\nabla r(w)^\top \nabla F(w)}{g(F(w))}$$

Our main assumption on the initial point w_0 is that for some $\kappa > 0$ and some functions R and g,

$$\int_0^\infty \sqrt{g^{-1}\left(\frac{r(w_0)}{t\alpha_{r,g}(w_0,\kappa)}\right) dt} < \frac{\kappa}{\sqrt{2H}}$$

The next lemma shows that for any initial point w_0 that satisfies the local condition above, one has a rate of convergence for GF starting from w_0.

Lemma 52. *Suppose w_0 satisfies (5.13) for some functions R and g, and radius $\kappa = \kappa_0 > 0$. Then, gradient flow starting from $w(0) = w_0$ satisfies for any $t \ge 0$,*

$$F(w(t)) \le g^{-1}\left(\frac{r(w_0)}{t\alpha(w_0,\kappa_0)}\right).$$

Proof. From our assumption, let R g and $\kappa > 0$ be given such that

$$\int_0^\infty \sqrt{g^{-1}\left(\frac{r(w_0)}{t\alpha_{r,g}(w_0,\kappa)}\right) dt} < \frac{\kappa}{\sqrt{2H}}$$

First note that by the definition of $\alpha_{r,g}(w_0, \kappa)$, we have that for any point w such that $\|w - w_0\|_2 \le \kappa$,

$$g(F(w)) \le \frac{\nabla r(w)^\top \nabla F(w)}{\alpha_{r,g}(w_0,\kappa)}$$

This implies that if we take $\Phi(w) = \frac{r(w)}{\alpha_{r,g}(w_0,\kappa)}$ as a potential, then for every point w that is within distance κ from w_0, Φ satisfies property (5.4) w.r.t. g for any point that is within distance κ from w_0. Now consider the gradient flow path starting at

w_0 and let t_0 be the first time the gradient flow path reaches a distance of κ from w_0. Till this time, we can apply Theorem 23 and conclude that for any $t < t_0$,

$$g(F(w(t))) \leq \frac{\Phi(w_0)}{t} = \frac{r(w_0)}{t\alpha(w_0, \kappa_0)}$$

Next, we will argue that $t_0 = \infty$. To this end, note that

$$\begin{aligned}
\|w(t_0) - w(0)\|_2 &= \left\| \int_0^{t_0} \nabla F(w(t)) dt \right\|_2 \\
&\leq \int_0^{t_0} \|\nabla F(w(t))\|_2 \, dt \\
&\leq \int_0^{t_0} \sqrt{2HF(w(t))} dt \\
&\leq \sqrt{2H} \int_0^{t_0} \sqrt{g^{-1}\left(\frac{r(w_0)}{t\alpha(w_0, \kappa_0)}\right)} dt
\end{aligned}$$

Note note that since t_0 is the first time we reach distance κ from w_0, till that point, we have that the entire GF path is within the κ radius from w_0 and hence, from our condition, $\int_0^\infty \sqrt{g^{-1}\left(\frac{r(w_0)}{t\alpha_{r,g}(w_0,\kappa)}\right)} dt < \frac{\kappa}{\sqrt{2H}}$. USing this above, we conclude that

$$\|w(t_0) - w(0)\|_2 \leq \sqrt{2H} \int_0^{t_0} \sqrt{g^{-1}\left(\frac{r(w_0)}{t\alpha(w_0, \kappa_0)}\right)} < \kappa$$

But this is a contradiction since at t_0, the distance to w_0 should be κ by definition of t_0. But we have shown that the distance is strictly smaller than κ. Hence we can conclude that $t_0 = \infty$. Hence we can conclude that for any $t > 0$ in fact,

$$F(w(t)) \leq g^{-1}\left(\frac{r(w_0)}{t\alpha(w_0, \kappa_0)}\right)$$

□

CHAPTER 6

REVISITING STOCHASTIC CONVEX OPTIMIZATION

Success in convex optimization is typically defined as finding a point whose value is close to the minimum possible value. *Information-based complexity* of optimization attempts to understand the minimal amount of effort required to reach a desired level of suboptimality under different oracle models for access to the function (Nemirovski and Yudin, 1983b; Traub et al., 1988). This complexity—for both deterministic and stochastic convex optimization—is tightly understood across a wide variety of settings (Nemirovski and Yudin, 1983b; Traub et al., 1988; Agarwal et al., 2009; Braun et al., 2017), and efficient algorithms that achieve optimal complexity are well known.

Recently, there has been a surge of interest in optimization for *non-convex* functions. In this case, finding a point with near-optimal function value is typically intractable under standard assumptions—both computationally and information-theoretically. For this reason, a standard task in non-convex optimization is to find an ϵ-stationary point, i.e., a point where the gradient is small ($\|\nabla F(w)\| \leq \epsilon$).

In stochastic non-convex optimization, there has been a flurry of recent research on algorithms with provable guarantees for finding near-stationary points (Ghadimi and Lan, 2013, 2016; Reddi et al., 2016a; Allen-Zhu, 2017; Lei et al., 2017; Jin et al., 2017; Zhou et al., 2018; Fang et al., 2018). However, the stochastic oracle complexity of finding near-stationary points is not yet well understood, so we do not know whether existing algorithms are optimal, or how we hope to improve upon them.

Recent work by Carmon et al. (2017a,b) establishes tight bounds on the *deter-*

ministic first-order oracle complexity of finding near-stationary points of smooth functions, both convex and non-convex. For convex problems, they prove that accelerated gradient descent is optimal both for finding approximate minimizers and approximate stationary points, while for non-convex problems, gradient descent is optimal for finding approximate stationary points. The picture is simple and complete: the same deterministic first-order methods that are good at finding approximate minimizers are also good at finding approximate stationary points, even for non-convex functions.

However, when one turns their attention to the *stochastic* oracle complexity of finding near-stationary points, the picture is far from clear. Even for *stochastic convex optimization*, the oracle complexity is not yet well understood. This paper takes a first step toward resolving the general case by providing nearly tight upper and lower bounds on the oracle complexity of finding near-stationary points in stochastic convex optimization, both for first-order methods and for global (i.e., statistical learning) methods. At first glance, this might seem trivial, since exact minimizers are equivalent to exact stationary points for convex functions. When it comes to finding *approximate* stationary points the situation is considerably more complex, and the equivalence does not yield optimal quantitative rates. For example, while the stochastic gradient descent (SGD) is (worst-case) optimal for stochastic convex optimization with a first-order oracle, it appears to be far from optimal for finding near-stationary points.

Contributions. We present a nearly tight analysis of the local stochastic oracle complexity and global stochastic oracle complexity ("sample complexity") of finding approximate stationary points in stochastic convex optimization. Briefly, the highlights are as follows:

	Deterministic First-Order Oracle	Sample Complexity	Stochastic First-Order Oracle
Upper:	$\tilde{O}\left(\sqrt{\frac{HR}{\epsilon}}\right)$ Nesterov (2012)	$O\left(\frac{\sigma^2}{\epsilon^2}\log^3\left(\frac{HR}{\epsilon}\right)\right)$ (Corollary 2)	$\tilde{O}\left(\sqrt{\frac{HR}{\epsilon}}+\frac{\sigma^2}{\epsilon^2}\right)$ (Corollary 1)
Lower:	$\Omega\left(\sqrt{\frac{HR}{\epsilon}}\right)$ Carmon et al. (2017b)	$\Omega\left(\frac{\sigma^2}{\epsilon^2}\right)$ (Theorem 34)	$\Omega\left(\sqrt{\frac{HR}{\epsilon}}+\frac{\sigma^2}{\epsilon^2}\log\left(\frac{HR}{\epsilon}\right)\right)$ (Theorem 32)
Upper:	$\tilde{O}\left(\frac{\sqrt{H\Delta}}{\epsilon}\right)$ Carmon et al. (2017b)	$O\left(\frac{\sigma^2}{\epsilon^2}\log^3\left(\frac{H\Delta}{\epsilon^2}\right)\right)$ (Corollary 2)	$\tilde{O}\left(\frac{\sqrt{H\Delta}}{\epsilon}+\frac{\sigma^2}{\epsilon^2}\right)$ (Corollary 1)
Lower:	$\Omega\left(\frac{\sqrt{H\Delta}}{\epsilon}\right)$ Carmon et al. (2017b)	$\Omega\left(\frac{\sigma^2}{\epsilon^2}\right)$ (Theorem 34)	$\Omega\left(\frac{\sqrt{H\Delta}}{\epsilon}+\frac{\sigma^2}{\epsilon^2}\log\left(\frac{H\Delta}{\epsilon^2}\right)\right)$ (Theorem 32)

Table 6.1: Upper and lower bounds on the complexity of finding x such that $\|\nabla F(w)\| \leq \epsilon$ for convex problems with H-Lipschitz gradients, where σ^2 is a bound on the variance of gradient estimates.

- We give upper and lower bounds on the local and global stochastic oracle complexity that match up to log factors. In particular, we show that the local stochastic complexity of finding stationary points is (up to log factors) characterized as the sum of the deterministic oracle complexity and the sample complexity.
- As a consequence of this two-pronged approach, we show that the gap between local stochastic complexity and sample complexity of finding near-stationary points is at least *exponential* in the smoothness parameter.
- We obtain the above results through new algorithmic improvements. We show that the recursive regularization technique introduced by Allen-Zhu (2018) for local stochastic optimization can be combined with empirical risk minimization to obtain *logarithmic* dependence on smoothness in the global model, and that the resulting algorithms can be implemented efficiently.

Complexity results are summarized in Table 6.1. Here we discuss the conceptual

contributions in more detail.

Decomposition of stochastic first-order complexity. For stochastic optimization of convex functions, there is a simple and powerful connection between three oracle complexities: Deterministic, local stochastic, and global stochastic. For many well-known problem classes, the stochastic first-order complexity is equal to the sum (equivalently, maximum) of the deterministic first-order complexity and the sample complexity. This decomposition of the local stochastic complexity into an "optimization term" plus a "statistical term" inspires optimization methods, guides analysis, and facilitates comparison of different algorithms. It indicates that "one pass" stochastic approximation algorithms like SGD are optimal for stochastic optimization in certain parameter regimes, so that we do not have to resort to sample average approximation or methods that require multiple passes over data.

We establish that the same decomposition holds for the task of finding approximate stationary points. Such a characterization should not be taken for granted, and it is not clear a priori that it should hold for finding stationary points. Establishing the result requires both developing new algorithms with near-optimal sample complexity in the global model, and improving previous local stochastic methods (Allen-Zhu, 2018) to match the optimal deterministic complexity.

Gap between sample complexity and stochastic first-order complexity. For non-smooth convex objectives, finding an approximate stationary point can require finding an *exact* minimizer of the function (consider the absolute value function). Therefore, as one would expect, the deterministic and stochastic first-order

oracle complexities for finding near-stationary points scale polynomially with the smoothness constant, even in low dimensions. Ensuring an approximate stationary point is impossible for non-smooth instances, even with an unbounded number of first-order oracle accesses. Surprisingly, we show that the sample complexity depends at most logarithmically on the smoothness. In fact, in one dimension the dependence on smoothness can be removed entirely.

Improved methods. Our improved sample complexity results for the global stochastic oracle/statistical learning model are based on a new algorithm which uses the *recursive regularization* (or, "SGD3") approach introduced by Allen-Zhu (2018). The methods iteratively solves a sequence of subproblems via regularized empirical risk minimization (RERM). Solving subproblems through RERM allows the method to exploit global access to the stochastic samples. Since the method enjoys only logarithmic dependence on smoothness (as well as initial suboptimality or distance to the optimum), it provides a better alternative to *any* stochastic first-order method whenever the smoothness is large relative to the variance in the gradient estimates. Since RERM is a finite-sum optimization problem, standard finite-sum optimization methods can be used to implement the method efficiently; the result is that we can beat the sample complexity of stochastic first-order methods with only modest computational overhead.

For the local stochastic model, we improve the SGD3 method of Allen-Zhu (2018) so that the "optimization" term matches the optimal deterministic oracle complexity. This leads to a quadratic improvement in terms of the initial distance to the optimum (the "radius" of the problem), $\|w_0 - w^*\|$. We also extend the analysis to the setting where initial sub-optimality $F(w_0) - F(w^*)$ is bounded but not the radius—a common setting in the analysis of non-convex optimization algorithms

and a setting in which recursive regularization was not previously analyzed.

6.1 Tools: Minimax oracle complexity

We consider the problem of finding an $\epsilon-$stationary point in the stochastic convex optimization setting. That is, for a convex function $F : \mathbb{R}^d \mapsto \mathbb{R}$, our goal is to find a point $x \in \mathbb{R}^d$ such that

$$\|\nabla F(w)\| \leq \epsilon, \tag{6.1}$$

given access to F only through an *oracle*.[1] Formally, the problem is specified by a class of functions to which F belongs, and through the type of oracle through which we access F. We outline these now.

Function classes. Recall that $F : \mathbb{R}^d \to \mathbb{R}$ is is said to H-smooth if

$$F(y) \leq F(x) + \langle \nabla F(x), y - x \rangle + \frac{H}{2}\|y - x\|^2 \quad \forall x, y \in \mathbb{R}^d, \tag{6.2}$$

and is said to be λ-strongly-convex if

$$F(y) \geq F(x) + \langle \nabla F(x), y - x \rangle + \frac{\lambda}{2}\|y - x\|^2 \quad \forall x, y \in \mathbb{R}^d. \tag{6.3}$$

We focus on two classes of objectives, both of which are defined relative to an arbitrary initial point w_0 provided to the optimization algorithm.

[1] Here, and for the rest of the paper, $\|\cdot\|$ is taken to be the Euclidean norm.

1. *Domain-bounded functions.*

$$\mathcal{F}^d_{\mathrm{DB}}[H, \lambda; R] = \left\{ F : \mathbb{R}^d \to \mathbb{R} \;\middle|\; \begin{array}{l} F \text{ is } H\text{-smooth and } \lambda\text{-strongly convex} \\ \operatorname{argmin}_w F(w) \neq \emptyset \\ \exists w^* \in \operatorname{argmin}_w F(w) \text{ s.t. } \|w_0 - w^*\| \leq R \end{array} \right\}. \tag{6.4}$$

2. *Range-bounded functions.*

$$\mathcal{F}^d_{\mathrm{RB}}[H, \lambda; \Delta] = \left\{ F : \mathbb{R}^d \to \mathbb{R} \;\middle|\; \begin{array}{l} F \text{ is } H\text{-smooth and } \lambda\text{-strongly convex} \\ \operatorname{argmin}_w F(w) \neq \emptyset \\ F(w_0) - \min_x F(w) \leq \Delta \end{array} \right\}. \tag{6.5}$$

We emphasize that while the classes are defined in terms of a strong convexity parameter, our main complexity results concern the non-strongly convex case where $\lambda = 0$. The strongly convex classes are used for intermediate results. We also note that our main results hold in arbitrary dimension, and so we drop the superscript d except when it is pertinent to discussion.

Oracle classes. An oracle accepts an argument $x \in \mathbb{R}^d$ and provides (potentially noisy or stochastic) information about the objective F around the point x. The oracle's output belongs to an *information space* $\mathcal{I}$. We consider three distinct types of oracles:

1. **Deterministic first-order oracle.** Denoted $\mathcal{O}_{\nabla F}$, with $\mathcal{I} \subseteq \mathbb{R}^d \times (\mathbb{R}^d)^*$. When queried at a point $x \in \mathbb{R}^d$, the oracle returns

$$\mathcal{O}_{\nabla F}(w) = (F(w), \nabla F(w)). \tag{6.6}$$

2. **Stochastic first-order oracle.** Denoted $\mathcal{O}^{\sigma}_{\nabla f}$, with $\mathcal{I} \subseteq \mathbb{R}^d \times \mathbb{R}^d$. The oracle is specified by a function $f : \mathbb{R}^d \times \mathcal{Z} \to \mathbb{R}$ and a distribution $\mathcal{D}$ over $\mathcal{Z}$ with the property that $F(w) = \mathbb{E}_{z\sim\mathcal{D}}[f(w;z)]$ and $\sup_x \left[\mathbb{E}_{z\sim\mathcal{D}} \|\nabla f(w;z) - \nabla F(w)\|^2\right] \leq \sigma^2$. When queried at a point $x \in \mathbb{R}^d$, the oracle draws an independent $z \sim \mathcal{D}$ and returns

$$\mathcal{O}^{\sigma}_{\nabla f}(w) = (f(w;z), \nabla f(w;z))_{z\sim\mathcal{D}}. \tag{6.7}$$

3. **Stochastic global oracle.** Denoted $\mathcal{O}^{\sigma}_{f}$, with $\mathcal{I} \subseteq (\mathbb{R}^d \mapsto \mathbb{R})$. The oracle is specified by a function $f : \mathbb{R}^d \times \mathcal{Z} \to \mathbb{R}$ and a distribution $\mathcal{D}$ over $\mathcal{Z}$ with the property that $F(w) = \mathbb{E}_{z\sim\mathcal{D}}[f(w;z)]$ and $\sup_x \left[\mathbb{E}_{z\sim\mathcal{D}} \|\nabla f(w;z) - \nabla F(w)\|^2\right] \leq \sigma^2$. When queried, the oracle draws an independent $z \in \mathcal{D}$ and returns the complete specification of the function $f(\cdot, z)$, specifically,

$$\mathcal{O}^{\sigma}_{f}(w) = (f(\cdot, z))_{z\sim\mathcal{D}}. \tag{6.8}$$

For consistency with the other oracles, we say that $\mathcal{O}^{\sigma}_{f}$ accepts an argument x, even though this argument is ignored. The global oracle captures the *statistical learning* problem, in which $f(\cdot; z)$ is the loss of a model evaluated on an instance $z \sim \mathcal{D}$, and this component function is fully known to the optimizer. Consequently, we use the terms "global stochastic complexity" and "sample complexity" interchangeably.

For the stochastic oracles, while F itself may need to have properties such as convexity or smoothness, $f(\cdot; z)$ as defined need not have these properties unless stated otherwise.

Minimax oracle complexity. Given a function class $\mathcal{F}$ and an oracle $\mathcal{O}$ with information space $\mathcal{I}$, we define the minimax oracle complexity of finding an ϵ-

stationary point as

$$\mathsf{m}_\epsilon(\mathcal{F}, \mathcal{O}) = \inf\left\{ m \in \mathbb{N} \;\middle|\; \inf_{A:\bigcup_{t\geq 0}\mathcal{I}^t \mapsto \mathbb{R}^d} \sup_{F\in\mathcal{F}} \mathbb{E}\left\|\nabla F(x_m)\right\| \leq \epsilon \right\}, \tag{6.9}$$

where $x_t \in \mathbb{R}^d$ is defined recursively as $x_t := A(\mathcal{O}(x_0), \ldots, \mathcal{O}(x_{t-1}))$ and the expectation is over the stochasticity of the oracle $\mathcal{O}$.[2]

Recap: Deterministic first-order oracle complexity. To position our new results on stochastic optimization we must first recall what is known about the *deterministic* first-order oracle complexity of finding near-stationary pointst. This complexity is tightly understood, with

$$\mathsf{m}_\epsilon(\mathcal{F}_{\mathrm{DB}}[H, \lambda = 0; R], \mathcal{O}_{\nabla F}) = \tilde{\Theta}(\sqrt{HR}/\sqrt{\epsilon}), \qquad \text{and}$$
$$\mathsf{m}_\epsilon(\mathcal{F}_{\mathrm{RB}}[H, \lambda = 0; \Delta], \mathcal{O}_{\nabla F}) = \tilde{\Theta}\left(\sqrt{H\Delta}/\epsilon\right),$$

up to logarithmic factors (Nesterov, 2012; Carmon et al., 2017b). The algorithm that achieves these rates is accelerated gradient descent (AGD).

6.2 Stochastic First-Order Complexity

Interestingly, the usual variants of stochastic gradient descent do not appear to be optimal in the stochastic model. A first concern is that they do not yield the correct dependence on desired stationarity ϵ.

As an illustrative example, let $F \in \mathcal{F}_{\mathrm{DB}}[H, \lambda = 0; R]$ and let any stochastic first-order oracle $\mathcal{O}^\sigma_{\nabla f}$ be given. We adopt the naive approach of bounding stationarity by function value suboptimality. In this case the standard analysis of stochastic gradient descent (e.g., Dekel et al. (2012)) implies that after m iterations,

[2] See Section 6.2 for discussion of randomized algorithms.

$\mathbb{E}\,\|\nabla F(x_m)\| \leq O(\sqrt{H(\mathbb{E}\,F(x_m) - F(w^*))}) \leq O\left(\sqrt{H(HR^2/m + \sigma R/\sqrt{m})}\right)$, and thus

$$\mathsf{m}_\epsilon(\mathcal{F}_{\mathrm{DB}}[H, \lambda = 0; R], \mathcal{O}^\sigma_{\nabla f}) \leq O\left(\frac{H^2R^2}{\epsilon^2} + \frac{H^2R^2\sigma^2}{\epsilon^4}\right).$$

The dependence on ϵ^{-4} is considerably worse than the ϵ^{-2} dependence enjoyed for function suboptimality.

In recent work, Allen-Zhu (2018) proposed a new *recursive regularization* approach and used this in an algorithm called SGD3 that obtains the correct ϵ^{-2} dependence.[3] For any $F \in \mathcal{F}_{\mathrm{DB}}[H, \lambda = 0; R]$ and $\mathcal{O}^\sigma_{\nabla f}$, SGD3 iteratively augments the objective with increasingly strong regularizers, "zooming in" on an approximate stationary point. Specifically, in the first iteration, SGD is used to find $\hat{w}_1$, an approximate minimizer of $F^{(0)}(w) = F(w)$. The objective is then augmented with a strongly-convex regularizer so $F^{(1)}(w) = F^{(0)}(w) + \lambda\,\|w - \hat{w}_1\|^2$. In the second round, SGD is initialized at $\hat{w}_1$, and used to find $\hat{w}_2$, an approximate minimizer of $F^{(1)}$. This process is repeated, with $F^{(t)}(w) := F^{(t-1)}(w) + 2^{t-1}\lambda\,\|w - \hat{w}_t\|^2$ for each $t \in [T]$. Allen-Zhu (2018) shows that SGD3 find an ϵ-stationary points using at most

$$m \leq \widetilde{O}\left(\frac{HR}{\epsilon} + \frac{\sigma^2}{\epsilon^2}\right) \tag{6.10}$$

local stochastic oracle queries. This oracle complexity has a familiar structure: it resembles the sum of an "optimization term" (HR/ϵ) and a "statistical term" (σ^2/ϵ^2). While we show that the statistical term is tight up to logarithmic factors (Theorem 32), the optimization term does not match the $\Omega(\sqrt{HR/\epsilon})$ lower bound for the deterministic setting (Carmon et al., 2017b).

Our first result is to close this gap. The key idea is to view SGD3 as a template

[3] Allen-Zhu (2018) also show that some simple variants of SGD are able to reduce the poor ϵ^{-4} dependence to, e.g., $\epsilon^{-5/2}$, but they fall short of the ϵ^{-2} dependence one should hope for. Similar remarks apply for $F \in \mathcal{F}_{\mathrm{RB}}[H, \lambda = 0; \Delta]$.

Algorithm 2 Recursive Regularization Meta-Algorithm

Input: A function $F \in \mathcal{F}[H, \lambda]$, an oracle $\mathcal{O}$ and an alloted number of oracle accesses m, an initial point w_0, and an optimization sub-routine $\mathcal{A}$, with $A = \mathcal{A}[\mathcal{O}, m/\lfloor \log_2 \frac{H}{\lambda} \rfloor]$.
$F^{(0)} := F$, $\hat{w}_0 := w_0$, $T \leftarrow \lfloor \log_2 \frac{H}{\lambda} \rfloor$.
for $t = 1$ to T **do**
  $\hat{w}_t$ is output of A used to optimize $F^{(t-1)}$ intitialized at $\hat{w}_{t-1}$
  $F^{(t)}(w) := F(w) + \lambda \sum_{k=1}^{t} 2^{k-1} \|w - \hat{w}_k\|^2$
return $\hat{w}_T$

algorithm, where the inner loop of SGD used in Allen-Zhu (2018) can be swapped out for an arbitrary optimization method $\mathcal{A}$. This template, Algorithm 0, forms the basis for all the new methods in this paper.[4]

To obtain optimal complexity for the local stochastic oracle model we use a variant of the accelerated stochastic approximation method ("AC-SA") due to Ghadimi and Lan (2012) as the subroutine. Pseudocode for AC-SA is provided in Algorithm 3. We use a variant called AC-SA^2, see Algorithm 4. The AC-SA^2 algorithm is equivalent to AC-SA, except the stepsize parameter is reset halfway through. This leads to slightly different dependence on the smoothness and domain size parameters, which is important to control the final rate when invoked within Algorithm 0.

Toward proving the tight upper bound in Table 6.1, we first show that Algorithm 0 with AC-SA^2 as its subroutine guarantees fast convergence for strongly-convex domain-bounded objectives.

Theorem 31. *For any $F \in \mathcal{F}_{DB}[H, \lambda; R]$ and any $\mathcal{O}^{\sigma}_{\nabla f}$, Algorithm 0 using AC-SA^2 as its subroutine finds a point $\hat{w}$ with $\mathbb{E}\,\|\nabla F(\hat{w})\| \leq \epsilon$ using*

[4]The idea of replacing the sub-algorithm in SGD3 was also used by Davis and Drusvyatskiy (2018), who showed that recursive regularization with a projected subgradient method can be used to find near-stationary points for the Moreau envelope of any Lipschitz function.

Algorithm 3 AC-SA

Input: A function $F \in \mathcal{F}_{\mathrm{DB}}[H, \lambda; R]$, a stochastic first-order oracle $\mathcal{O}^{\sigma}_{\nabla f}$, and an alloted number of oracle accesses m

$w_0^{ag} = w_0$

for $t = 1, 2, \ldots, m$ **do**

$\alpha_t \leftarrow \frac{2}{t+1}$

$\gamma_t \leftarrow \frac{4H}{t(t+1)}$

$x_t^{md} \leftarrow \frac{(1-\alpha_t)(\lambda+\gamma_t)}{\gamma_t+(1-\alpha_t^2)\lambda} x_{t-1}^{ag} + \frac{\alpha_t((1-\alpha_t)\lambda+\gamma_t)}{\gamma_t+(1-\alpha_t^2)\lambda} x_{t-1}$

$\nabla f(x_t^{md}; z_t) \leftarrow \mathcal{O}^{\sigma}_{\nabla f}(x_t^{md})$

$x_t \leftarrow \frac{\alpha_t \lambda}{\lambda+\gamma_t} x_t^{md} + \frac{(1-\alpha_t)\lambda+\gamma_t}{\lambda+\gamma_t} x_{t-1} - \frac{\alpha_t}{\lambda+\gamma_t} \nabla f(x_t^{md}; z_t)$

$x_t^{ag} \leftarrow \alpha_t x_t + (1-\alpha_t) x_{t-1}^{ag}$

return x_m^{ag}

$$m \leq O\left(\sqrt{\frac{H}{\lambda}} \log\left(\frac{H}{\lambda}\right) + \sqrt{\frac{HR}{\epsilon}} \log\left(\frac{H}{\lambda}\right) + \left(\frac{\sqrt{H}\sigma}{\sqrt{\lambda}\epsilon}\right)^{\frac{2}{3}} \log\left(\frac{H}{\lambda}\right) + \frac{\sigma^2}{\epsilon^2} \log^3\left(\frac{H}{\lambda}\right)\right)$$

total stochastic first-order oracle accesses.

The analysis of this algorithm is detailed in Section 6.5 and carefully matches the original analysis of SGD3 (Allen-Zhu, 2018). The essential component of the analysis is Lemma 54, which provides a bound on $\|\nabla F(\hat{w})\|$ in terms of the optimization error of each invocation of AC-SA^2 on the increasingly strongly convex subproblems $F^{(t)}$.

Our final result for non-strongly convex objectives uses Algorithm 0 with AC-SA^2 on the regularized objective $\tilde{F}(w) = F(w) + \frac{\lambda}{2}\|w - w_0\|^2$. The performance guarantee is as follows, and concerns both domain-bounded and range-bounded functions.

Corollary 1. *For any $F \in \mathcal{F}_{DB}[H, \lambda = 0; R]$ and any $\mathcal{O}^{\sigma}_{\nabla f}$, Algorithm 0 with AC-SA^2 as its subroutine applied to $F(w) + \frac{\lambda}{2}\|w - w_0\|^2$ for $\lambda =$*

$\Theta\left(\min\left\{\frac{\epsilon}{R}, \frac{H\epsilon^4}{\sigma^4 \log^4(\sigma/\epsilon)}\right\}\right)$ *yields a point* $\hat{w}$ *such that* $\mathbb{E}\,\|\nabla F(\hat{w})\| \le \epsilon$ *using*

$$m \le O\left(\sqrt{\frac{HR}{\epsilon}} \log\left(\frac{HR}{\epsilon}\right) + \frac{\sigma^2}{\epsilon^2} \log^3\left(\frac{\sigma}{\epsilon}\right)\right)$$

total stochastic first-order oracle accesses.

For any $F \in \mathcal{F}_{RB}[H, \lambda = 0; \Delta]$ *and any* $\mathcal{O}^{\sigma}_{\nabla f}$*, the same algorithm with* $\lambda = \Theta\left(\min\left\{\frac{\epsilon^2}{\Delta}, \frac{H\epsilon^4}{\sigma^4 \log^4(\sigma/\epsilon)}\right\}\right)$ *yields a point* $\hat{w}$ *with* $\mathbb{E}\,\|\nabla F(\hat{w})\| \le \epsilon$ *using*

$$m \le O\left(\frac{\sqrt{H\Delta}}{\epsilon} \log\left(\frac{\sqrt{H\Delta}}{\epsilon}\right) + \frac{\sigma^2}{\epsilon^2} \log^3\left(\frac{\sigma}{\epsilon}\right)\right)$$

total stochastic first-order oracle accesses.

This follows easily from Theorem 31 and is proven in Section 6.5. Intuitively, when λ is chosen appropriately, the gradient of the regularized objective $\tilde{F}$ does not significantly deviate from the gradient of F, but the number of iterations required to find an $O(\epsilon)$-stationary point of $\tilde{F}$ is still controlled.

We now provide nearly-tight lower bounds for the stochastic first-order oracle complexity. A notable feature of the lower bound is to show that show some of the logarithmic terms in the upper bound—which are not present in the optimal oracle complexity for function value suboptimality—are necessary.

Theorem 32. *For any* $H, \Delta, R, \sigma > 0$*, any* $\epsilon \le \frac{HR}{8}$*, the stochastic first-order oracle complexity for range-bounded functions is lower bounded as*

$$\mathsf{m}_\epsilon(\mathcal{F}_{DB}[H, \lambda = 0; R], \mathcal{O}^{\sigma}_{\nabla f}) \ge \Omega\left(\sqrt{\frac{HR}{\epsilon}} + \frac{\sigma^2}{\epsilon^2} \log\left(\frac{HR}{\epsilon}\right)\right).$$

For any $\epsilon \le \sqrt{\frac{H\Delta}{8}}$*, the stochastic first-order complexity for domain-bounded functions is lower bounded as*

$$\mathsf{m}_\epsilon(\mathcal{F}_{RB}[H, \lambda = 0; \Delta], \mathcal{O}^{\sigma}_{\nabla f}) \ge \Omega\left(\frac{\sqrt{H\Delta}}{\epsilon} + \frac{\sigma^2}{\epsilon^2} \log\left(\frac{H\Delta}{\epsilon^2}\right)\right).$$

Algorithm 4 AC-SA^2

Input: A function $F \in \mathcal{F}_{\mathrm{DB}}[H, \lambda; R]$, a stochastic first-order oracle $\mathcal{O}^{\sigma}_{\nabla f}$, and an alloted number of oracle accesses m

$x_1 \leftarrow \text{AC-SA}\big(F, w_0, \frac{m}{2}\big)$

$x_2 \leftarrow \text{AC-SA}\big(F, x_1, \frac{m}{2}\big)$

return x_2

The proof, detailed in Section 6.5, combines the existing lower bound on the deterministic first-order oracle complexity (Carmon et al., 2017b) with a new lower bound for the statistical term. The approach is to show that any algorithm for finding near-stationary points can be used to solve noisy binary search (NBS), and then apply a known lower bound for NBS (Feige et al., 1994; Karp and Kleinberg, 2007). It is possible to extend the lower bound to randomized algorithms; see discussion in Carmon et al. (2017b).

6.3 Sample Complexity for finding stationary points

Having tightly bounded the stochastic first-order oracle complexity of finding approximate stationary points, we now turn to sample complexity. If the heuristic reasoning that stochastic first-order complexity should decompose into sample complexity and deterministic first-order complexity ($\mathsf{m}_\epsilon(\mathcal{F}, \mathcal{O}^{\sigma}_{\nabla f}) \approx \mathsf{m}_\epsilon(\mathcal{F}, \mathcal{O}_{\nabla F}) + \mathsf{m}_\epsilon(\mathcal{F}, \mathcal{O}^{\sigma}_{f})$) is correct, then one would expect that the sample complexity should be $\tilde{O}(\sigma^2/\epsilon^2)$ for both domain-bounded and range-bounded function.

A curious feature of this putative sample complexity is that it does not depend on the smoothness of the function. This is somewhat surprising since if the function is non-smooth in the vicinity of its minimizer, there may only be a single ϵ-stationary point, and an algorithm would need to return *exactly* that point using only a finite

sample. We show that the sample complexity is in fact almost independent of the smoothness constant, with a mild logarithmic dependence. We also provide nearly tight lower bounds.

For the global setting, a natural algorithm to try is regularized empirical risk minimization (RERM), which returns $\hat{w} = \operatorname{argmin}_x \frac{1}{m}\sum_{i=1}^m f(w; z_i) + \frac{\lambda}{2}\|w - w_0\|^2$.[5] For any domain-bounded function $F \in \mathcal{F}_{\mathrm{DB}}[H, \lambda = 0; R]$, a standard analysis of ERM based on stability (Shalev-Shwartz et al., 2009) shows that $\mathbb{E}\|\nabla F(\hat{w})\| \leq \mathbb{E}\sqrt{2H(F(\hat{w}) - F^*)} + \lambda R \leq O(\sqrt{H^3R^2/\lambda m} + \lambda R)$. Choosing $m = \Omega((HR)^3/\epsilon^3)$ and $\lambda = \Theta(\epsilon/R)$ yields an ϵ-stationary point. This upper bound, however, has two shortcomings. First, it scales with ϵ^{-3} rather than ϵ^{-2} that we hoped for and, second, it does not approach 1 as $\sigma \to 0$, which one should expect in the noise-free case. The stochastic first-order algorithm from the previous section has better sample complexity, but the number of samples still does not approach one when $\sigma \to 0$.

We fix both issues by combining regularized ERM with the recursive regularization approach, giving an upper bound that nearly matches the sample complexity lower bound $\Omega(\sigma^2/\epsilon^2)$. They key tool here is a sharp analysis of regularized ERM—stated in the appendix as Theorem 37—that obtains the correct dependence on the variance σ^2.

As in the previous section, we first prove an intermediate result for the strongly convex case. Unlike Section 6.2, where F was required to be convex but the components $f(\cdot; z)$ were not required to be, we must assume here either that $f(\cdot; z)$ is convex for all z.[6]

[5] While it is also tempting to try constrained ERM, this does not succeed even for function value suboptimality (Shalev-Shwartz et al., 2009).

[6] We are not aware of any analysis of ERM for strongly convex losses that does not make such

Theorem 33. *For any $F \in \mathcal{F}[H, \lambda]$ and any global stochastic oracle $\mathcal{O}_f^\sigma$ with the restriction that $f(\cdot; z)$ is convex for all z, Algorithm 0 with ERM as its subroutine finds $\hat{w}$ with $\mathbb{E}\|\nabla F(\hat{w})\| \leq \epsilon$ using at most*

$$m \leq O\left(\frac{\sigma^2}{\epsilon^2}\log^3\left(\frac{H}{\lambda}\right)\right)$$

total samples.

The proof is given in Section 6.5. As before, we handle the non-strongly convex case by applying the algorithm to $\tilde{F}(w) = F(w) + \frac{\lambda}{2}\|w - w_0\|^2$.

Corollary 2. *For any $F \in \mathcal{F}_{DB}[H, \lambda = 0; R]$ and any global stochastic oracle $\mathcal{O}_f^\sigma$ with the restriction that $f(\cdot; z)$ is convex for all z, Algorithm 0 with ERM as its subroutine, when applied to $\tilde{F}(w) = F(w) + \frac{\lambda}{2}\|w - w_0\|^2$ with $\lambda = \Theta(\epsilon/R)$, finds a point $\hat{w}$ with $\mathbb{E}\|\nabla F(\hat{w})\| \leq \epsilon$ using at most*

$$m \leq O\left(\frac{\sigma^2}{\epsilon^2}\log^3\left(\frac{HR}{\epsilon}\right)\right)$$

total samples.

For any $F \in \mathcal{F}_{RB}[H, \lambda = 0; \Delta]$ and any global stochastic oracle $\mathcal{O}_f^\sigma$ with the restriction that $f(\cdot; z)$ is convex for all z, the same approach with $\lambda = \Theta(\epsilon^2/\Delta)$ finds an ϵ-stationary point using at most

$$m \leq O\left(\frac{\sigma^2}{\epsilon^2}\log^3\left(\frac{\sqrt{H\Delta}}{\epsilon}\right)\right)$$

total samples.

This follows immediately from Theorem 33 by choosing λ small enough such that $\|\nabla F(w)\| \approx \|\nabla \tilde{F}(w)\|$. Details are deferred to Section 6.5.

With this new sample complexity upper bound, we proceed to provide an almost-tight lower bound.

an assumption. It is interesting to see whether this can be removed.

Theorem 34. *For any $H, \Delta, R, \sigma > 0$, $\epsilon \leq \min\{\frac{HR}{8}, \sqrt{\frac{H\Delta}{8}}, \frac{\sigma}{4}\}$, the sample complexity to find a ϵ-stationary point*[7] *is lower bounded as*

$$\mathsf{m}_\epsilon(\mathcal{F}_{DB}[H, \lambda = 0; R] \cap \mathcal{F}_{RB}[H, \lambda = 0; \Delta], \mathcal{O}_f^\sigma) \geq \Omega\left(\frac{\sigma^2}{\epsilon^2}\right).$$

This lower bound is similar to constructions used to prove lower bounds in the case of finding an approximate minimizer (Nemirovski and Yudin, 1983b; Nesterov, 2004; Woodworth and Srebro, 2016). However, our lower bound applies for functions with simultaneously bounded domain and range, so extra care must be taken to ensure that these properties hold. The lower bound also ensures that $f(\cdot; z)$ is convex for all z. The proof is located in Section 6.5.

Discussion: Efficient implementation. Corollary 2 provides a bound on the number of *samples* needed to find a near-stationary point. However, a convenient property of the method is that the ERM objective $F^{(t)}$ solved in each iteration is convex, $(H + 2^t\lambda)$-smooth, $(2^t\lambda)$-strongly convex, and has *finite sum* structure with m/T components. These subproblems can therefore be solved using at most $O\left(\left(\frac{m}{T} + \sqrt{\frac{m(H+\lambda 2^t)}{T\lambda 2^t}}\right)\log\frac{HR}{\epsilon}\right)$ gradient computations via a first-order optimization algorithm such as Katyusha (Allen-Zhu, 2017). This implies that the method can be implemented with a total gradient complexity of $O\left(\left(\frac{\sigma^2}{\epsilon^2} + \frac{\sigma^{3/2}\sqrt{H}}{\epsilon^{3/2}}\right)\log^4\left(\frac{HR}{\epsilon}\right)\right)$ over all T iterations, and similarly for the bounded-range case. Thus, the algorithm is not just sample-efficient, but also computationally efficient, albeit slightly less so than the algorithm from Section 6.2.

Removing smoothness entirely in one dimension. We conclude from Corollary 2 that the sample complexity depends at most logarithmically upon the

[7] This lower bound applies both to deterministic and randomized optimization algorithms.

smoothness constant, which raises the question of whether it must depend on the smoothness at all. We now show that for the special case of functions in one dimension, smoothness is not necessary. In other words, all that is required to find an ϵ-stationary point is Lipschitzness.

Theorem 35. *Consider any convex, L-Lipschitz function $F : \mathbb{R} \to \mathbb{R}$ that is bounded from below,*[8] *and any global stochastic oracle $\mathcal{O}_f^\sigma$ with the restriction that $f(\cdot; z)$ is convex for all z. There exists an algorithm which uses $m = O\left(\frac{\sigma^2 \log\left(\frac{L}{\epsilon}\right)}{\epsilon^2}\right)$ samples and outputs a point $\hat{w}$ such that $\mathbb{E}\left[\inf_{g \in \partial F(\hat{w})} |g|\right] \leq \epsilon$.*

The algorithm calculates the empirical risk minimizer on several independent samples, and then returns the point that has the smallest empirical gradient norm on a validation sample. The proof uses the fact that any function F as in the theorem statement has a single left-most and a single right-most ϵ-stationary point. As long as the empirical function's derivative is close to F's at those two points, we argue that the ERM lies between them with constant probability, and is thus an ϵ-stationary point of F. We are able to boost the confidence by repeating this a logarithmic number of times. A rigorous argument is included in Section 6.5. Unfortunately, arguments of this type do not appear to extend to more than one dimension, as the boundary of the set of ϵ-stationary points will generally be uncountable, and thus it is not apparent that the empirical gradient will be uniformly close to the population gradient. It remains open whether smoothness is needed in two dimensions or more.

The algorithm succeeds even for non-differentiable functions, and requires neither strong convexity nor knowledge of a point w_0 for which $\|w_0 - w^*\|$ or $F(w_0) - F^*$ is bounded. In fact, the assumption of Lipschitzness (more gener-

[8] This lower bound does not enter the sample complexity quantitatively.

ally, L-subgaussianity of the gradients) is only required to get an in-expectation statement. Without this assumption, it can still be shown that ERM finds an ϵ-stationary point with constant probability using $m \leq O\left(\frac{\sigma^2}{\epsilon^2}\right)$ samples.

6.4 Discussion

We have proven nearly tight bounds on the oracle complexity of finding near-stationary points in stochastic convex optimization, both for local stochastic oracles and global stochastic oracles. We hope that the approach of jointly studying stochastic first-order complexity and sample complexity will find use more broadly in non-convex optimization. To this end, we close with a few remarks and open questions.

1. *Is smoothness necessary for finding ϵ-stationary points?* While the logarithmic factor separating the upper and lower bound we provide for stochastic first-order oracle complexity is fairly inconsequential, the gap between the upper and lower bound on the *sample complexity* is quite interesting. In particular, we show through Theorem 34 and Corollary 2 that

$$\Omega\left(\frac{\sigma^2}{\epsilon^2}\right) \leq \mathsf{m}_\epsilon\left(\mathcal{F}_{\mathrm{RB}}[H, \lambda = 0; \Delta], \mathcal{O}_f^\sigma\right) \leq O\left(\frac{\sigma^2}{\epsilon^2}\log^3\left(\frac{\sqrt{H\Delta}}{\epsilon}\right)\right),$$

and similarly for the domain-bounded case. Can the polylog(H) factor on the right-hand side be removed entirely? Or in other words, is it possible to find near-stationary points in the statistical learning model without smoothness?[9] By Theorem 35, we know that this is possible in one dimension.

[9]For a general non-smooth function F, a point x is said to be an ϵ-stationary point if there exists $v \in \partial F(w)$ such that $\|v\|_2 \leq \epsilon$.

2. *Tradeoff between computational complexity and sample complexity.* Suppose our end goal is to find a near-stationary point in the statistical learning setting, but we wish to do so efficiently. For range-bounded functions, if we use Algorithm 0 with AC-SA^2 as a subroutine we require $\tilde{O}\left(\frac{\sqrt{H\Delta}}{\epsilon} + \frac{\sigma^2}{\epsilon^2}\right)$ samples, and the total computational effort (measured by number of gradient operations) is also $\tilde{O}\left(\frac{\sqrt{H\Delta}}{\epsilon} + \frac{\sigma^2}{\epsilon^2}\right)$. On the other hand, if we use Algorithm 0 with RERM as a subroutine and implement RERM with Katyusha, then we obtain an improved sample complexity of $\tilde{O}\left(\frac{\sigma^2}{\epsilon^2}\right)$, but at the cost of a larger number of gradient operations: $\tilde{O}\left(\frac{\sigma^2}{\epsilon^2} + \frac{\sqrt{H}\sigma^{3/2}}{\epsilon^{3/2}}\right)$. Tightly characterizing such computational-statistical tradeoffs in this and related settings is an interesting direction for future work.

3. *Active stochastic oracle.* For certain stochastic first-order optimization algorithms based on variance reduction (SCSG (Lei et al., 2017), SPIDER (Fang et al., 2018)), a gradient must be computed at multiple points for the same sample $f(\cdot; z)$. We refer to such algorithms as using an "active query" first-order stochastic oracle, which is a stronger oracle than the classical first-order stochastic oracle (see Woodworth et al. (2018) for more discussion). It would be useful to characterize the exact oracle complexity in this model, and in particular to understand how many active queries are required to obtain logarithmic dependence on smoothness as in the global case.

4. *Complexity of finding stationary points for smooth non-convex functions.* An important open problem is to characterize the minimax oracle complexity of finding near-stationary points for smooth non-convex functions, both for local and global stochastic oracles. For a deterministic first-order oracle, the optimal rate is $\tilde{\Theta}\left(\frac{H\Delta}{\epsilon^2}\right)$. In the stochastic setting, a simple sample complexity lower bound follows from the convex case, but this is not known to be tight.

6.5 Detailed proofs

Proofs from Section 6.2: Upper Bounds

Theorem 36 (Proposition 9 of Ghadimi and Lan (2012)). *For any $F \in \mathcal{F}_{DB}[H, \lambda; R]$ and any $\mathcal{O}^{\sigma}_{\nabla f}$, the AC-SA algorithm returns a point $\hat{w}_T$ after making T oracle accesses such that*

$$\mathbb{E}[F(\hat{w}_T)] - F(w^*) \leq \frac{2HR^2}{T^2} + \frac{8\sigma^2}{\lambda T}.$$

Lemma 53. *For any $F \in \mathcal{F}_{DB}[H, \lambda; R]$ and any $\mathcal{O}^{\sigma}_{\nabla f}$, the AC-SA^2 algorithm returns a point $\hat{w}$ after making T oracle accesses such that*

$$\mathbb{E}[F(\hat{w})] - F(w^*) \leq \frac{128H^2R^2}{\lambda T^4} + \frac{256H\sigma^2}{\lambda^2 T^3} + \frac{16\sigma^2}{\lambda T}.$$

Proof. By Theorem 36, the first instance of AC-SA outputs $\hat{w}_1$ such that

$$\mathbb{E}[F(\hat{w}_1)] - F(w^*) \leq \frac{8HR^2}{T^2} + \frac{16\sigma^2}{\lambda T}, \tag{6.11}$$

and since F is λ-strongly convex,

$$\frac{\lambda}{2}\mathbb{E}\|\hat{w}_1 - w^*\|^2 \leq \mathbb{E}[F(\hat{w}_1)] - F(w^*) \leq \frac{8HR^2}{T^2} + \frac{16\sigma^2}{\lambda T}. \tag{6.12}$$

Also by Theorem 36, the second instance of AC-SA outputs $\hat{w}_2$ such that

$$\begin{aligned}
\mathbb{E}[F(\hat{w}_2) - F(w^*)] &= \mathbb{E}[\mathbb{E}\left[F(\hat{w}_2) - F(w^*) \mid \hat{w}_1\right]] && (6.13)\\
&\leq \mathbb{E}\left[\frac{8H\|\hat{w}_1 - w^*\|^2}{T^2} + \frac{16\sigma^2}{\lambda T}\right] && (6.14)\\
&\leq \frac{128H^2R^2}{\lambda T^4} + \frac{256H\sigma^2}{\lambda^2 T^3} + \frac{16\sigma^2}{\lambda T}. && (6.15)
\end{aligned}$$

□

Lemma 54 (Claim 6.2 of Allen-Zhu (2018)). *Suppose that for every $t = 1, \ldots, T$ the iterates of Algorithm 0 satisfy $\mathbb{E}\left[F^{(t-1)}(\hat{w}_t)\right] - F^{(t-1)}(w^*_{t-1}) \leq \delta_t$ where $w^*_{t-1} = \operatorname{argmin}_x F^{(t-1)}(w)$, then*

1. *For all $t \geq 1$, $\mathbb{E}\left[\left\|\hat{w}_t - w^*_{t-1}\right\|\right]^2 \leq \mathbb{E}\left[\left\|\hat{w}_t - w^*_{t-1}\right\|^2\right] \leq \dfrac{\delta_t}{2^{t-2}\lambda}$.*
2. *For every $t \geq 1$, $\mathbb{E}[\|\hat{w}_t - w^*_t\|]^2 \leq \mathbb{E}\left[\|\hat{w}_t - w^*_t\|^2\right] \leq \dfrac{\delta_t}{2^t\lambda}$.*
3. *For all $t \geq 1$, $\mathbb{E}\left[\sum_{t=1}^T 2^t\lambda\|\hat{w}_t - w^*_t\|\right] \leq 4\sum_{t=1}^T \sqrt{2^t\lambda\delta_t}$.*

Theorem 31. *For any $F \in \mathcal{F}_{DB}[H, \lambda; R]$ and any $\mathcal{O}^{\sigma}_{\nabla f}$, Algorithm 0 using AC-SA^2 as its subroutine finds a point $\hat{w}$ with $\mathbb{E}\,\|\nabla F(\hat{w})\| \leq \epsilon$ using*

$$m \leq O\left(\sqrt{\frac{H}{\lambda}}\log\left(\frac{H}{\lambda}\right) + \sqrt{\frac{HR}{\epsilon}}\log\left(\frac{H}{\lambda}\right) + \left(\frac{\sqrt{H}\sigma}{\sqrt{\lambda}\epsilon}\right)^{\frac{2}{3}}\log\left(\frac{H}{\lambda}\right) + \frac{\sigma^2}{\epsilon^2}\log^3\left(\frac{H}{\lambda}\right)\right)$$

total stochastic first-order oracle accesses.

Proof. As in Lemma 54, let $\mathbb{E}[F^{(t-1)}(\hat{w}_t) - F^{(t-1)}(w^*_{t-1})] \leq \delta_t$ for each $t \geq 1$. The objective in the final iteration, $F^{(T-1)}(w) = F(w) + \lambda\sum_{t=1}^{T-1} 2^{t-1}\left\|w - \hat{w}_t\right\|^2$, so

$$\|\nabla F(\hat{w}_T)\| = \|\nabla F^{(T-1)}(\hat{w}_T) + \lambda\sum_{t=1}^{T-1} 2^t(\hat{w}_t - \hat{w}_T)\| \tag{6.16}$$

$$\leq \left\|\nabla F^{(T-1)}(\hat{w}_T)\right\| + \lambda\sum_{t=1}^{T-1} 2^t\left\|\hat{w}_t - \hat{w}_T\right\| \tag{6.17}$$

$$\leq \left\|\nabla F^{(T-1)}(\hat{w}_T)\right\| + \lambda\sum_{t=1}^{T-1} 2^t\left(\left\|\hat{w}_t - w^*_{T-1}\right\| + \left\|\hat{w}_T - w^*_{T-1}\right\|\right) \tag{6.18}$$

$$\leq 2\left\|\nabla F^{(T-1)}(\hat{w}_T)\right\| + \lambda\sum_{t=1}^{T-1} 2^t\left\|\hat{w}_t - w^*_{T-1}\right\| \tag{6.19}$$

$$\leq 2\left\|\nabla F^{(T-1)}(\hat{w}_T)\right\| + 4\sum_{t=1}^{T-1}\sqrt{\lambda 2^t \delta_t} \tag{6.20}$$

$$\leq 4\sqrt{H\delta_T} + 4\sum_{t=1}^{T-1}\sqrt{\lambda 2^t \delta_t} \tag{6.21}$$

$$\leq 4\sum_{t=1}^{T}\sqrt{\lambda 2^{t+1} \delta_t}. \tag{6.22}$$

Above, (6.17) and (6.18) rely on the triangle inequality; (6.19) follows from the $\left(\lambda \sum_{t=1}^{T-1} 2^t\right)$-strong convexity of $F^{(T-1)}$; (6.20) applies the third conclusion of Lemma 54; (6.21) uses the fact that $F^{(t-1)}$ is $H + \lambda \sum_{t=1}^{T-1} 2^t < H + \lambda 2^T = H + \lambda 2^{\lfloor \log H/\lambda \rfloor} \leq 2H$-smooth; and finally (6.22) uses that $H \leq \lambda 2^{T+1}$.

We chose $\mathcal{A}(F^{(t-1)}, \hat{w}_{t-1})$ to be AC-SA^2 applied to $F^{(t-1)}$ initialized at $\hat{w}_{t-1}$ using m/T stochastic gradients. Therefore,

$$\delta_t \leq \frac{128H^2\mathbb{E}\left\|\hat{w}_{t-1} - w^*_{t-1}\right\|^2}{2^{t-1}\lambda(m/T)^4} + \frac{256H\sigma^2}{2^{2t-2}\lambda^2(m/T)^3} + \frac{16\sigma^2}{2^{t-1}\lambda(m/T)}. \tag{6.23}$$

Using part two of Lemma 54, for $t > 1$ we can bound $\mathbb{E}\left\|\hat{w}_{t-1} - w^*_{t-1}\right\|^2 \leq \frac{\delta_{t-1}}{2^{t-1}\lambda}$, thus

$$\delta_t \leq \frac{128H^2\delta_{t-1}}{2^{2t-2}\lambda^2(m/T)^4} + \frac{256H\sigma^2}{2^{2t-2}\lambda^2(m/T)^3} + \frac{16\sigma^2}{2^{t-1}\lambda(m/T)}. \tag{6.24}$$

We can therefore bound

$$\begin{aligned} 8\sum_{t=1}^{T}\sqrt{\lambda 2^{t-1}\delta_t} &\leq 8\sqrt{\frac{128H^2\left\|w_0 - w^*\right\|^2}{(m/T)^4} + \frac{256H\sigma^2}{\lambda(m/T)^3} + \frac{16\sigma^2}{(m/T)}} \\ &\quad + 8\sum_{t=2}^{T}\sqrt{\frac{128H^2\delta_{t-1}}{2^{t-1}\lambda(m/T)^4} + \frac{256H\sigma^2}{2^{t-1}\lambda(m/T)^3} + \frac{16\sigma^2}{(m/T)}} \end{aligned} \tag{6.25}$$

$$\begin{aligned} &\leq 8\sqrt{\frac{128H^2\left\|w_0 - w^*\right\|^2}{(m/T)^4}} + 8\sqrt{\frac{256H\sigma^2}{\lambda(m/T)^3}} + 8\sqrt{\frac{16\sigma^2}{(m/T)}} \\ &\quad + 8\sum_{t=2}^{T}\sqrt{\frac{128H^2\delta_{t-1}}{2^{t-1}\lambda(m/T)^4}} + \sqrt{\frac{256H\sigma^2}{2^{t-1}\lambda(m/T)^3}} + \sqrt{\frac{16\sigma^2}{(m/T)}} \end{aligned} \tag{6.26}$$

$$= \frac{64\sqrt{2}H \|w_0 - w^*\| T^2}{m^2} + \frac{128\sqrt{H}\sigma T^{3/2}}{\sqrt{\lambda} m^{3/2}} \sum_{t=1}^{T} \frac{1}{\sqrt{2^{t-1}}} + \frac{32\sigma T^{3/2}}{\sqrt{m}} + \frac{128HT^2}{m^2} \sum_{t=2}^{T} \sqrt{\frac{\delta_{t-1}}{2^{t-2}\lambda}} \tag{6.27}$$

$$\leq \frac{64\sqrt{2}H \|w_0 - w^*\| T^2}{m^2} + \frac{512\sqrt{H}\sigma T^{3/2}}{\sqrt{\lambda} m^{3/2}} + \frac{32\sigma T^{3/2}}{\sqrt{m}} + \frac{128HT^2}{m^2} \sum_{t=1}^{T} \sqrt{\frac{\delta_t}{2^{t-1}\lambda}} \tag{6.28}$$

$$\leq \frac{64\sqrt{2}H \|w_0 - w^*\| T^2}{m^2} + \frac{512\sqrt{H}\sigma T^{3/2}}{\sqrt{\lambda} m^{3/2}} + \frac{32\sigma T^{3/2}}{\sqrt{m}} + \frac{128HT^2}{\lambda m^2} \sum_{t=1}^{T} \sqrt{\lambda 2^{t-1} \delta_t}. \tag{6.29}$$

Above, we arrive at (6.25) by upper bounding each δ_t via (6.24); (6.26) follows from the fact that for $a, b \geq 0$, $\sqrt{a+b} \leq \sqrt{a} + \sqrt{b}$; (6.28) uses the fact that $\sum_{t=1}^{T} \frac{1}{\sqrt{2^{t-1}}} \leq 4$ and $\sqrt{\frac{\delta_T}{2^{T-1}\lambda}} \geq 0$; and finally, (6.29) follows by multiplying each non-negative term in the sum by 2^{t-1}. Rearranging inequality (6.29) and combining with (6.22) yields

$$\mathbb{E} \|\nabla F(\hat{w}_T)\| \leq \left(\frac{1}{1 - \frac{16HT^2}{\lambda m^2}} \right) \left(\frac{64\sqrt{2}H \|w_0 - w^*\| T^2}{m^2} + \frac{512\sqrt{H}\sigma T^{3/2}}{\sqrt{\lambda} m^{3/2}} + \frac{32\sigma T^{3/2}}{\sqrt{m}} \right). \tag{6.30}$$

Choosing $m > 8T\sqrt{\frac{H}{\lambda}}$ ensures that the first term is at most 2, and then solving for m such that the second term is $O(\epsilon)$ completes the proof. □

Lemma 55. *For any F, define $\tilde{F}(w) = F(w) + \frac{\lambda}{2} \|w - w_0\|$. Then*

1. $F \in \mathcal{F}_{DB}[H, \lambda = 0; R] \implies \tilde{F} \in \mathcal{F}_{DB}[H + \lambda, \lambda; R]$ *and* $\forall x \, \|\nabla F(w)\| \leq 2 \left\| \nabla \tilde{F}(w) \right\| + \lambda R$.

2. $F \in \mathcal{F}_{RB}[H, \lambda = 0; \Delta] \implies$

$\tilde{F} \in \mathcal{F}_{DB}[H + \lambda, \lambda; R = \sqrt{2\Delta/\lambda}]$ *and* $\forall x \, \|\nabla F(w)\| \leq 2 \left\|\nabla \tilde{F}(w)\right\| + \sqrt{2\lambda\Delta}$.

Proof. Let $\tilde{w}^* \in \operatorname{argmin}_x \tilde{F}(w)$. Since $\nabla \tilde{F}(w) = \nabla F(w) + \lambda(w - w_0)$,

$$\|\nabla F(w)\| \leq \left\|\nabla \tilde{F}(w)\right\| + \lambda \|w - w_0\| \tag{6.31}$$

$$\leq \left\|\nabla \tilde{F}(w)\right\| + \lambda \|w_0 - \tilde{w}^*\| + \lambda \|w - \tilde{w}^*\| \tag{6.32}$$

$$\leq 2 \left\|\nabla \tilde{F}(w)\right\| + \lambda \|w_0 - \tilde{w}^*\|, \tag{6.33}$$

where we used the λ-strong convexity of $\tilde{F}$ for the last inequality. Similarly, $0 = \nabla \tilde{F}(\tilde{w}^*) = \nabla F(\tilde{w}^*) + \lambda(\tilde{w}^* - w_0)$. Therefore,

$$\lambda \|w_0 - \tilde{w}^*\|^2 = \langle \nabla F(\tilde{w}^*), w_0 - \tilde{w}^* \rangle \tag{6.34}$$

$$= \langle \nabla F(\tilde{w}^*), w_0 - w^* \rangle + \langle \nabla F(\tilde{w}^*), w^* - \tilde{w}^* \rangle \tag{6.35}$$

$$\leq \langle \nabla F(\tilde{w}^*), w_0 - w^* \rangle \tag{6.36}$$

$$= \langle \lambda(w_0 - \tilde{w}^*), w_0 - w^* \rangle \tag{6.37}$$

$$\leq \lambda \|w_0 - \tilde{w}^*\| \|w_0 - w^*\|. \tag{6.38}$$

The first inequality follows from the convexity of F and the second from the Cauchy-Schwarz inequality. When $F \in \mathcal{F}_{\mathrm{DB}}[H, \lambda = 0; R]$, then $\|w_0 - \tilde{w}^*\| \leq R$, which, combined with (6.33) proves the first claim.

Alternatively, when $F \in \mathcal{F}_{\mathrm{RB}}[H, \lambda = 0; \Delta]$

$$F(w_0) = \tilde{F}(w_0) \geq \tilde{F}(\tilde{w}^*) = F(\tilde{w}^*) + \frac{\lambda}{2} \|w_0 - \tilde{w}^*\|^2. \tag{6.39}$$

Rearranging,

$$\|w_0 - \tilde{w}^*\| \leq \sqrt{\frac{2(F(w_0) - F(\tilde{w}^*))}{\lambda}} \leq \sqrt{\frac{2(F(w_0) - F(w^*))}{\lambda}} \leq \sqrt{\frac{2\Delta}{\lambda}}. \tag{6.40}$$

This, combined with (6.33), completes the proof. □

Corollary 1. *For any $F \in \mathcal{F}_{DB}[H, \lambda = 0; R]$ and any $\mathcal{O}^{\sigma}_{\nabla f}$, Algorithm 0 with AC-SA^2 as its subroutine applied to $F(w) + \frac{\lambda}{2}\|w - w_0\|^2$ for $\lambda = \Theta\left(\min\left\{\frac{\epsilon}{R}, \frac{H\epsilon^4}{\sigma^4 \log^4(\sigma/\epsilon)}\right\}\right)$ yields a point $\hat{w}$ such that $\mathbb{E}\|\nabla F(\hat{w})\| \le \epsilon$ using*

$$m \le O\left(\sqrt{\frac{HR}{\epsilon}} \log\left(\frac{HR}{\epsilon}\right) + \frac{\sigma^2}{\epsilon^2} \log^3\left(\frac{\sigma}{\epsilon}\right)\right)$$

total stochastic first-order oracle accesses.

For any $F \in \mathcal{F}_{RB}[H, \lambda = 0; \Delta]$ and any $\mathcal{O}^{\sigma}_{\nabla f}$, the same algorithm with $\lambda = \Theta\left(\min\left\{\frac{\epsilon^2}{\Delta}, \frac{H\epsilon^4}{\sigma^4 \log^4(\sigma/\epsilon)}\right\}\right)$ yields a point $\hat{w}$ with $\mathbb{E}\|\nabla F(\hat{w})\| \le \epsilon$ using

$$m \le O\left(\frac{\sqrt{H\Delta}}{\epsilon} \log\left(\frac{\sqrt{H\Delta}}{\epsilon}\right) + \frac{\sigma^2}{\epsilon^2} \log^3\left(\frac{\sigma}{\epsilon}\right)\right)$$

total stochastic first-order oracle accesses.

Proof. We use Algorithm 1 with AC-SA^2 as its subroutine to optimize $\tilde{F}(w) = F(w) + \frac{\lambda}{2}\|w - w_0\|^2$. Our choice of $\lambda = \frac{256H\log^2(m^2)}{m^2} \le O(H)$ ensures that $\tilde{F}$ is $H + \lambda \le O(H)$-smooth and λ-strongly convew; that $\frac{16(H+\lambda)\log^2\left(\frac{H+\lambda}{\lambda}\right)}{\lambda m^2} \le \frac{1}{2}$; and finally that $\frac{H}{\lambda} \le m^2$. Therefore, by Theorem 31, in particular, (6.30), the output satisfies

$$\mathbb{E}\left\|\nabla \tilde{F}(\hat{w})\right\| \le O\left(\frac{H\|w_0 - \tilde{w}^*\|\log^2(H/\lambda)}{m^2} + \frac{\sqrt{H}\sigma\log^{3/2}(H/\lambda)}{\sqrt{\lambda}m^{3/2}} + \frac{\sigma\log^{3/2}(H/\lambda)}{\sqrt{m}}\right) \tag{6.41}$$

$$\le O\left(\frac{H\|w_0 - \tilde{w}^*\|\log^2(m)}{m^2} + \frac{\sigma\log^{3/2}(m)}{\sqrt{m}}\right), \tag{6.42}$$

where $\tilde{w}^* = \operatorname{argmin}_x \tilde{F}(w)$. For $F \in \mathcal{F}_{\mathrm{DB}}[H, \lambda = 0; R]$, by part one of Lemma 55, $\|w_0 - \tilde{w}^*\| \le R$ and

$$\mathbb{E}\|\nabla F(\hat{w})\| \le O\left(\frac{HR\log^2(m)}{m^2} + \frac{\sigma\log^{3/2}(m)}{\sqrt{m}}\right). \tag{6.43}$$

Solving for m such that this expression is $O(\epsilon)$ completes the first part of the proof. For this m,

$$\lambda = \Theta\left(\min\left\{\frac{\epsilon}{R}, \frac{H\epsilon^4}{\sigma^4\log^4(\sigma/\epsilon)}\right\}\right). \tag{6.44}$$

For $F \in \mathcal{F}_{\mathrm{RB}}[H, \lambda = 0; \Delta]$, by part two of Lemma 55, $\|w_0 - \tilde{w}^*\| \leq \sqrt{2\Delta/\lambda}$ and

$$\mathbb{E}\,\|\nabla F(\hat{w})\| \leq O\left(\frac{\sqrt{H\Delta}\log(m)}{m} + \frac{\sigma \log^{3/2}(m)}{\sqrt{m}}\right). \tag{6.45}$$

Solving for m such that this expression is $O(\epsilon)$ completes the the proof. For this m,

$$\lambda = \Theta\left(\min\left\{\frac{\epsilon^2}{\Delta}, \frac{H\epsilon^4}{\sigma^4 \log^4(\sigma/\epsilon)}\right\}\right). \tag{6.46}$$

□

Proofs from Section 6.3: Upper Bounds

Theorem 37. *For any $F \in \mathcal{F}[H, \lambda]$ and any $\mathcal{O}_f^\sigma$ with the restriction that $f(w; z)$ is λ-strongly convex with respect to x for all z, define the empirical risk minimizer via*

$$\hat{w} = \operatorname*{argmin}_{x \in \mathbb{R}^d} \frac{1}{m} \sum_{t=1}^{m} f(w; z_t).$$

Then the empirical risk minimizer enjoys the guarantee

$$\mathbb{E}\|\hat{w} - w^*\|^2 \leq \frac{4\sigma^2}{\lambda^2 m}. \tag{6.47}$$

Proof. Let $\widehat{F}_m(w) = \frac{1}{m}\sum_{t=1}^m f(w; z_t)$ be the empirical objective. Since $f(w; z_t)$ is λ-strongly convex for each z_t, $\widehat{F}_m$ is itself λ-strongly convex, and so we have

$$\left\langle \nabla \hat{F}_n(w^\star), \hat{w} - w^* \right\rangle + \frac{\lambda}{2}\|\hat{w} - w^*\|^2 \leq \hat{F}_n(\hat{w}) - \hat{F}_n(w^*).$$

Since, $\hat{w}$ is the empirical risk minimizer, we have $\hat{F}_n(\hat{w}) - \hat{F}_n(w^*) \leq 0$, and so, rearranging,

$$\frac{\lambda}{2}\|\hat{w} - w^*\|^2 \leq -\left\langle \nabla \hat{F}_n(w^*), \hat{w} - w^* \right\rangle \leq \left\|\nabla \hat{F}_n(w^*)\right\| \|\hat{w} - w^*\|.$$

If $\hat{w} - w^* = 0$, then we are done. Otherwise,

$$\|\hat{w} - w^*\| \leq \frac{2}{\lambda}\left\|\nabla \hat{F}_n(w^*)\right\|.$$

Now square both sides and take the expectation, which gives

$$\mathbb{E}\|\hat{w} - w^*\|_2^2 \leq \frac{4}{\lambda^2}\,\mathbb{E}\left\|\nabla \hat{F}_n(w^*)\right\|^2.$$

The final result follows by observing that $\mathbb{E}\left\|\nabla \hat{F}_n(w^*)\right\|^2 \leq \frac{\sigma^2}{m}$. □

Theorem 33. *For any $F \in \mathcal{F}[H, \lambda]$ and any global stochastic oracle $\mathcal{O}_f^\sigma$ with the restriction that $f(\cdot; z)$ is convex for all z, Algorithm 0 with ERM as its subroutine finds $\hat{w}$ with $\mathbb{E}\,\|\nabla F(\hat{w})\| \leq \epsilon$ using at most*

$$m \leq O\left(\frac{\sigma^2}{\epsilon^2}\log^3\left(\frac{H}{\lambda}\right)\right)$$

total samples.

Proof. Consider the function $F^{(T)}(w) = F(w) + \lambda \sum_{t=1}^{T} 2^{t-1}\,\|w - \hat{w}_t\|^2$. Then

$$\|\nabla F(\hat{w}_T)\| = \left\|\nabla F^{(T)}(\hat{w}_T) + \lambda \sum_{t=1}^{T} 2^t(\hat{w}_t - \hat{w}_T)\right\| \tag{6.48}$$

$$\leq \left\|\nabla F^{(T)}(\hat{w}_T)\right\| + \lambda \sum_{t=1}^{T-1} 2^t\,\|\hat{w}_t - \hat{w}_T\| \tag{6.49}$$

$$\leq \left\|\nabla F^{(T)}(\hat{w}_T)\right\| + \lambda \sum_{t=1}^{T-1} 2^t\left(\|\hat{w}_t - w_T^*\| + \|\hat{w}_T - w_T^*\|\right) \tag{6.50}$$

$$\leq 2\left\|\nabla F^{(T)}(\hat{w}_T)\right\| + \lambda \sum_{t=1}^{T-1} 2^t\,\|\hat{w}_t - w_T^*\| \tag{6.51}$$

$$\leq 6H\,\|\hat{w}_T - w_T^*\| + \lambda \sum_{t=1}^{T-1} 2^t\,\|\hat{w}_t - w_T^*\| \tag{6.52}$$

$$\leq 12\lambda \sum_{t=1}^{T} 2^t\,\|\hat{w}_t - w_T^*\|\,. \tag{6.53}$$

Above, (6.49) and (6.50) rely on the triangle inequality; (6.51) follows from the $\left(\lambda \sum_{t=1}^{T} 2^t\right)$-strong convexity of $F^{(T)}$; (6.52) uses the fact that $F^{(T)}$ is $H + \lambda \sum_{t=1}^{T} 2^t < H + \lambda 2^{T+1} = H + 2\lambda 2^{\lfloor \log H/\lambda \rfloor} \leq 3H$-smooth.

Define $P_k = \sum_{t=1}^{k} 2^t \|\hat{w}_t - w_k^*\|$ for $1 \leq k \leq T$ with $P_0 = 0$. Note that our upper bound (6.53) is equal to $12\lambda P_T = 12\lambda \sum_{k=1}^{T} P_k - P_{k-1}$, so we will estimate the terms of this sum.

$$P_k - P_{k-1} = 2^k \|\hat{w}_k - w_k^*\| + \sum_{t=1}^{k-1} 2^t \left(\|\hat{w}_t - w_k^*\| - \left\|\hat{w}_t - w_{k-1}^*\right\|\right) \tag{6.54}$$

$$\leq 2^k \|\hat{w}_k - w_k^*\| + \sum_{t=1}^{k-1} 2^t \left\|w_k^* - w_{k-1}^*\right\| \tag{6.55}$$

$$\leq 2^k \left(\|\hat{w}_k - w_k^*\| + \left\|w_k^* - w_{k-1}^*\right\|\right) \tag{6.56}$$

$$\leq 2^k \left(2\|\hat{w}_k - w_k^*\| + \left\|\hat{w}_k - w_{k-1}^*\right\|\right). \tag{6.57}$$

Above, we used the reverse triangle inequality to derive (6.55). By optimality of w_{k-1}^* and w_k^*,

$$\left\|\hat{w}_k - w_{k-1}^*\right\|^2 - \|\hat{w}_k - w_k^*\|^2 = \frac{F^{(k)}(w_{k-1}^*) - F^{(k)}(w_k^*) + F^{(k-1)}(w_k^*) - F^{(k-1)}(w_{k-1}^*)}{2^{k-1}\lambda} \geq 0. \tag{6.58}$$

Thus $\|\hat{w}_k - w_k^*\| \leq \left\|\hat{w}_k - w_{k-1}^*\right\|$ and, combining (6.53) and (6.57) yields

$$\|\nabla F(\hat{w}_T)\| \leq 36\lambda \sum_{t=1}^{T} 2^t \left\|\hat{w}_t - w_{t-1}^*\right\|. \tag{6.59}$$

Since $\hat{w}_t$ is the output of ERM on the $2^{t-1}\lambda$-strongly convex function F^{t-1} using m/T samples, by Theorem 37, $\mathbb{E}\left\|\hat{w}_t - w_{t-1}^*\right\| \leq \frac{2\sigma\sqrt{T}}{2^{t-1}\lambda\sqrt{m}}$ and

$$\mathbb{E}\|\nabla F(\hat{w}_T)\| \leq 36\lambda \sum_{t=1}^{T} 2^t \mathbb{E}\left\|\hat{w}_t - w_{t-1}^*\right\| \tag{6.60}$$

$$\leq 36\lambda \sum_{t=1}^{T} 2^t \frac{\sigma\sqrt{T}}{2^{t-2}\lambda\sqrt{m}} \tag{6.61}$$

$$= \frac{144\sigma T^{3/2}}{\sqrt{m}}. \tag{6.62}$$

Solving for m such that the expression is less than ϵ completes the proof. $\square$

Corollary 2. *For any $F \in \mathcal{F}_{DB}[H, \lambda = 0; R]$ and any global stochastic oracle $\mathcal{O}_f^\sigma$ with the restriction that $f(\cdot; z)$ is convex for all z, Algorithm 0 with ERM as its subroutine, when applied to $\tilde{F}(w) = F(w) + \frac{\lambda}{2}\|w - w_0\|^2$ with $\lambda = \Theta(\epsilon/R)$, finds a point $\hat{w}$ with $\mathbb{E}\|\nabla F(\hat{w})\| \leq \epsilon$ using at most*

$$m \leq O\left(\frac{\sigma^2}{\epsilon^2}\log^3\left(\frac{HR}{\epsilon}\right)\right)$$

total samples.

For any $F \in \mathcal{F}_{RB}[H, \lambda = 0; \Delta]$ and any global stochastic oracle $\mathcal{O}_f^\sigma$ with the restriction that $f(\cdot; z)$ is convex for all z, the same approach with $\lambda = \Theta(\epsilon^2/\Delta)$ finds an ϵ-stationary point using at most

$$m \leq O\left(\frac{\sigma^2}{\epsilon^2}\log^3\left(\frac{\sqrt{H\Delta}}{\epsilon}\right)\right)$$

total samples.

Proof. The objective function $\tilde{F}(w) = F(w) + \frac{\lambda}{2}\|w - w_0\|^2$ is $(H + \lambda)$-smooth and λ-strongly convex. Thus by Theorem 33, in particular (6.62), the output of the algorithm satisfies

$$\mathbb{E}\left\|\nabla \tilde{F}(\hat{w})\right\| \leq \frac{144\sigma \log^{3/2}\left(\frac{H+\lambda}{\lambda}\right)}{\sqrt{m}}. \tag{6.63}$$

For $F \in \mathcal{F}_{\mathrm{DB}}[H, \lambda = 0; R]$, with $\lambda = \Theta(\epsilon/R)$ and $m = \Omega\left(\frac{\sigma^2}{\epsilon^2}\log^3\left(\frac{HR}{\epsilon}\right)\right)$ and using part one of Lemma 55 we conclude

$$\mathbb{E}\|\nabla F(\hat{w})\| \leq O(\epsilon + \lambda R) \leq O(\epsilon), \tag{6.64}$$

which completes the first part of the proof.

Similarly, for $F \in \mathcal{F}_{\mathrm{RB}}[H, \lambda = 0; \Delta]$, with $\lambda = \Theta(\epsilon^2/\Delta)$ and $m = \Omega\left(\frac{\sigma^2}{\epsilon^2}\log^3\left(\frac{\sqrt{H\Delta}}{\epsilon}\right)\right)$, by part two of Lemma 55 we conclude

$$\mathbb{E}\|\nabla F(\hat{w})\| \leq O\left(\epsilon + \sqrt{\lambda\Delta}\right) \leq O(\epsilon), \tag{6.65}$$

which completes the proof. $\square$

Theorem 35. *Consider any convex, L-Lipschitz function $F : \mathbb{R} \to \mathbb{R}$ that is bounded from below,*[10] *and any global stochastic oracle $\mathcal{O}_f^\sigma$ with the restriction that $f(\cdot; z)$ is convex for all z. There exists an algorithm which uses $m = O\left(\frac{\sigma^2 \log\left(\frac{L}{\epsilon}\right)}{\epsilon^2}\right)$ samples and outputs a point $\hat{w}$ such that $\mathbb{E}\left[\inf_{g \in \partial F(\hat{w})} |g|\right] \leq \epsilon$.*

Proof. Our algorithm involves calculating the ERM on several independent samples, evaluating the gradient norm at these ERMs on a held-out sample, and returning the point with the smallest gradient norm.

Let $\nabla_- F(w)$ denote the left-derivative of F at x, and let $\nabla_+ F(w)$ denote the right-derivative. Since F is bounded from below, $\lim_{x \to -\infty} \nabla_- F(w) \leq 0$ and $\lim_{x \to \infty} \nabla_+ F(w) \geq 0$, thus there exists at least one ϵ-stationary point for F. Consequently, there is a unique $a \in \mathbb{R} \cup \{-\infty\}$ for which $\nabla_+ F(a) \geq -\epsilon$ and $\forall x < a \ \nabla_+ F(w) < -\epsilon$. The point a is the left-most ϵ-stationary point. It is possible that $a = -\infty$, in which case there are no $x < a$. Similarly, there is a unique $b \in \mathbb{R} \cup \{\infty\}$ for which $\nabla_- F(b) \leq \epsilon$ and $\forall x > b \ \nabla_- F(w) > \epsilon$. The point b is the right-most ϵ-stationary point. It is possible that $b = \infty$, in which case there are no $x > b$.

By convexity, $\forall x < y \ \nabla_- F(w) \leq \nabla_+ F(w) \leq \nabla_- F(y) \leq \nabla_+ F(y)$. Therefore, $x < a \implies \inf_{g \in \partial F(w)} |g| \geq |\nabla_+ F(w)| > \epsilon$ and $x > b \implies \inf_{g \in \partial F(w)} |g| \geq |\nabla_- F(w)| > \epsilon$. Therefore, $[a, b] \equiv \{x : \inf_{g \in \partial F(w)} |g| \leq \epsilon\}$. Consequently, all that we need to show is that our algorithm returns a point within the interval $[a, b]$.

Let $\hat{F}(w) = \frac{1}{m} \sum_{i=1}^m f(w; z_i)$ be the empirical objective function and let $\hat{w}$ be

[10] This lower bound does not enter the sample complexity quantitatively.

any minimizer of $\hat{F}$. Consider first the case that $a > -\infty$, we will argue that $\hat{w} \geq a$. Observe that if $\nabla_- \hat{F}(a) < 0$, then since $\hat{F}$ is convex, it is decreasing on $[-\infty, a]$ and thus $\hat{w} \geq a$. Since $a > -\infty$, $\nabla_- F(a) \leq -\epsilon$, so the value $\nabla_- \hat{F}(a) = \frac{1}{m}\sum_{i=1}^m \nabla_- f(a; z_i)$ is the sum of i.i.d. random variables that have mean $\nabla_- F(a) \leq -\epsilon$ and variance σ^2. By Chebyshev's inequality, the random variable $\nabla_- \hat{F}(a)$ will not deviate too far from its mean:

$$\mathbb{P}\Big[\nabla_- \hat{F}(a) \geq 0\Big] \leq \frac{\sigma^2}{m\epsilon^2}. \tag{6.66}$$

Similarly,

$$\mathbb{P}\Big[\nabla_+ \hat{F}(b) \leq 0\Big] \leq \frac{\sigma^2}{m\epsilon^2}. \tag{6.67}$$

Therefore, with probability at least $1 - \frac{2\sigma^2}{m\epsilon^2}$, the minimum of $\hat{F}$ lies in the range $[a, b]$ and thus the ERM $\hat{w}$ is an ϵ-stationary point of F.

Consider calculating k ERMs $\hat{w}_1, \ldots, \hat{w}_k$ on k independent samples of size m. Then with probability at least $1 - \left(\frac{2\sigma^2}{m\epsilon^2}\right)^k$, at least one of these points is an ϵ-stationary point of F.

Now, suppose we have km additional heldout samples which constitute an empirical objective $\hat{F}$. Since the ERMs $\hat{w}_i$ are independent of these samples,

$$\begin{aligned}\mathbb{E}\left[\max_{i\in[k]} \left\|\nabla \hat{F}(\hat{w}_i) - \nabla F(\hat{w}_i)\right\|^2\right] &\leq \sum_{i=1}^k \mathbb{E}\left[\left\|\nabla \hat{F}(\hat{w}_i) - \nabla F(\hat{w}_i)\right\|^2\right] \\ &\leq \frac{k\sigma^2}{km} = \frac{\sigma^2}{m}.\end{aligned}$$

Condition on the event that at least one of the ERMs is an ϵ-stationary point of F and denote one of those ERMs as $\hat{w}_{i^*}$. Denote this event E. Let $\hat{i} \in \operatorname{argmin}_i \left\|\nabla \hat{F}(\hat{w}_i)\right\|$ where we abuse notation and say $\left\|\nabla \hat{F}(\hat{w}_i)\right\| := \inf_{g \in \partial \hat{F}(\hat{w}_i)} |g|$ for cases where $\hat{F}$ is not differentiable at $\hat{w}_i$. Then

$$\mathbb{E}[\|\nabla F(\hat{w}_{\hat{i}})\| | E] \leq \mathbb{E}\left[\left\|\nabla \hat{F}(\hat{w}_{\hat{i}})\right\| \middle| E\right] + \mathbb{E}\left[\max_{i\in[k]} \left\|\nabla \hat{F}(\hat{w}_i) - \nabla F(\hat{w}_i)\right\| \middle| E\right] \tag{6.68}$$

$$\leq \mathbb{E}\left[\left\|\nabla \hat{F}(\hat{w}_{\hat{i}})\right\| \middle| E\right] + \sqrt{\frac{\sigma^2}{m}} \tag{6.69}$$

$$\leq \mathbb{E}\left[\left\|\nabla \hat{F}(\hat{w}_{i^*})\right\| \middle| E\right] + \sqrt{\frac{\sigma^2}{m}} \tag{6.70}$$

$$\leq \mathbb{E}[\|\nabla F(\hat{w}_{i^*})\| | E] + \mathbb{E}\left[\max_{i\in[k]} \left\|\nabla \hat{F}(\hat{w}_i) - \nabla F(\hat{w}_i)\right\| \middle| E\right] + \sqrt{\frac{\sigma^2}{m}} \tag{6.71}$$

$$\leq \epsilon + 2\sqrt{\frac{\sigma^2}{m}}. \tag{6.72}$$

The event that one of the ERMs is an ϵ-stationary point happens with probability at least $1-\left(\frac{2\sigma^2}{m\epsilon^2}\right)^k$. Choosing $m = \Omega\left(\frac{\sigma^2}{\epsilon^2}\right)$ and $k = \Omega\left(\log \frac{L}{\epsilon}\right)$ ensures $1-\left(\frac{2\sigma^2}{m\epsilon^2}\right)^k \geq 1 - \frac{\epsilon}{L}$. Therefore,

$$\mathbb{E}[\|\nabla F(\hat{w}_{\hat{i}})\|] = \mathbb{P}[E]\mathbb{E}[\|\nabla F(\hat{w}_{\hat{i}})\| | E] + \mathbb{P}[E^c]\mathbb{E}[\|\nabla F(\hat{w}_{\hat{i}})\| | E^c] \tag{6.73}$$

$$\leq \left(1 - \frac{\epsilon}{L}\right)\left(\epsilon + 2\sqrt{\frac{\sigma^2}{m}}\right) + \left(\frac{\epsilon}{L}\right)(L) \tag{6.74}$$

$$\leq O(\epsilon). \tag{6.75}$$

This entire algorithm required $O(km) = O\left(\frac{\sigma^2 \log\left(\frac{L}{\epsilon}\right)}{\epsilon^2}\right)$ samples in total, completing the proof. □

Proofs of the Lower Bounds

Theorem 34. *For any $H, \Delta, R, \sigma > 0$, $\epsilon \leq \min\{\frac{HR}{8}, \sqrt{\frac{H\Delta}{8}}, \frac{\sigma}{4}\}$, the sample complexity to find a ϵ-stationary point*[11] *is lower bounded as*

$$\mathsf{m}_\epsilon(\mathcal{F}_{DB}[H, \lambda = 0; R] \cap \mathcal{F}_{RB}[H, \lambda = 0; \Delta], \mathcal{O}_f^\sigma) \geq \Omega\left(\frac{\sigma^2}{\epsilon^2}\right).$$

Proof. For a constant $b \in \mathbb{R}$ to be chosen later, let

$$f(w; z) = \sigma \langle w, z\rangle + \frac{b}{2}\|w\|^2. \tag{6.76}$$

[11] This lower bound applies both to deterministic and randomized optimization algorithms.

The distribution $\mathcal{D}$ of the random variable z is the uniform distribution over $\{z_1, \ldots, z_m\}$ where the vectors $z_i \in \mathbb{R}^d$ are orthonormal ($d \geq m$). Therefore,

$$F(w) = \mathbb{E}[f(w; z)] = \sigma \left\langle w, \frac{1}{m} \sum_{i=1}^{m} z_i \right\rangle + \frac{b}{2} \|w\|^2 . \tag{6.77}$$

This function is clearly convex, b-smooth, and attains its unique minimum at $w^* = -\frac{\sigma}{bm} \sum_{i=1}^{m} z_i$ which has norm $\|w^*\|^2 = \frac{\sigma^2}{b^2 m}$, so choosing $b \geq \frac{\sigma}{R\sqrt{m}}$ ensures $\|w^*\|^2 \leq R^2$. Furthermore, $F(0) - F(w^*) = \frac{\sigma^2}{2bm}$, so choosing $b \geq \frac{\sigma^2}{2\Delta m}$ ensures $F(0) - F(w^*) \leq \Delta$. Choosing $b = \max\{\frac{\sigma}{R\sqrt{m}}, \frac{\sigma^2}{2\Delta m}\}$ ensures both simultaneously. Finally, $\mathbb{E} \|\nabla f(w; z) - \nabla F(w)\| = \frac{1}{m} \sum_{i=1}^{m} \left\| \sigma z_i - \frac{\sigma}{m} \sum_{j=1}^{m} z_j \right\|^2 = \sigma^2 \left(1 - \frac{1}{m}\right) \leq \sigma^2$.

Therefore, $F \in \mathcal{F}_{\mathrm{DB}}[H, \lambda = 0; R] \cap \mathcal{F}_{\mathrm{RB}}[H, \lambda = 0; \Delta]$ and $f, \mathcal{D}$ properly define a $\mathcal{O}^{\sigma}_{\nabla f}$.

Suppose, for now, that x is a point such that $\langle w, v_i \rangle \geq -\frac{\sigma}{8bm}$ for all $i \geq m/2$. Then

$$\begin{aligned}
\|\nabla F(w)\|^2 &= \frac{\sigma^2}{m} + b^2 \|w\|^2 + \frac{2\sigma b}{m} \sum_{i=1}^{m} \langle w, v_i \rangle && (6.78)\\
&\geq \frac{\sigma^2}{m} + b^2 \sum_{i<m/2} \langle w, v_i \rangle^2 + \frac{2\sigma b}{m} \sum_{i<m/2} \langle w, v_i \rangle - \frac{\sigma^2}{4m} && (6.79)\\
&\geq \frac{3\sigma^2}{4m} + \min_{y \in \mathbb{R}} \frac{b^2 m}{2} y^2 + \sigma b y && (6.80)\\
&= \frac{\sigma^2}{4m}. && (6.81)
\end{aligned}$$

Therefore, for all such vectors x, $\|\nabla F(w)\| \geq \frac{\sigma}{2\sqrt{m}}$. This holds for any $b \geq 0$ and set $\{z_1, \ldots, z_m\}$. From here, we will argue that any randomized algorithm with access to less than $m/2$ samples from $\mathcal{D}$ is likely to output such an x. We consider a random function instance determined by drawing the orthonormal set $\{z_1, \ldots, z_m\}$ uniformly at random from the set of orthonormal vectors in $\mathbb{R}^d$. We will argue that with moderate probability over the randomness in the algorithm and in the draw of $z_1, \ldots, z_m$, the output of the algorithm has small inner product

with $z_{m/2}, \ldots, z_m$. This approach closely resembles previous work (Woodworth and Srebro, 2016, Lemma 7).

Less than $m/2$ samples fix less than $m/2$ of the vectors z_i; assume w.l.o.g. that the algorithm's sample $S = \{z_1, \ldots, z_{m/2-1}\}$. The vectors z_i are a uniformly random orthonormal set, therefore for any $i \geq m/2$, $z_i|S$ is distributed uniformly on the $(d - m/2 + 1)$-dimensional unit sphere in the subspace orthogonal to $\operatorname{span}\left(z_1, \ldots, z_{m/2-1}\right)$. Let $\hat{w}$ be the output of any randomized algorithm whose input is S. If $\|\hat{w}\| \geq \frac{2\sigma}{b\sqrt{m}}$ then it is easily confirmed that $\|\nabla F(\hat{w})\| \geq \frac{\sigma^2}{m}$. Otherwise, we analyze

$$\mathbb{P}\left[\langle \hat{w}, v_i \rangle < -\frac{\sigma}{8bm} \;\middle|\; S, \hat{w}\right] \leq \mathbb{P}\left[|\langle \hat{w}, v_i \rangle| \geq \frac{\sigma}{8bm} \;\middle|\; S, \hat{w}\right] \tag{6.82}$$

$$\leq \mathbb{P}\left[\frac{2\sigma}{b\sqrt{m}} \left|\left\langle \frac{\hat{w}}{\|\hat{w}\|}, v_i \right\rangle\right| \geq \frac{\sigma}{8bm} \;\middle|\; S, \hat{w}\right] \tag{6.83}$$

$$= \mathbb{P}\left[\left|\left\langle \frac{\hat{w}}{\|\hat{w}\|}, v_i \right\rangle\right| \geq \frac{1}{16\sqrt{m}} \;\middle|\; S, \hat{w}\right]. \tag{6.84}$$

This probability only increases if we assume that $\hat{w}$ is orthogonal to $\operatorname{span}(z_1, \ldots, z_{m/2-1})$, in which case we are considering the inner product between a fixed unit vector and a uniformly random unit vector. The probability of the inner product being large is proportional to the surface area of the "cap" of a unit sphere in $(d - m/2 + 1)$-dimensions lying above and below circles of radius $\sqrt{1 - \frac{1}{256m}}$. These end caps, in total, have surface area less than that of a sphere with that same radius. Therefore,

$$\mathbb{P}\left[\langle \hat{w}, v_i \rangle < -\frac{\sigma}{8bm} \;\middle|\; S, \hat{w}\right] \leq \sqrt{\left(1 - \frac{1}{256m}\right)^{d - \frac{m}{2}}} \tag{6.85}$$

$$= \left(1 - \frac{\frac{d}{512m} - \frac{1}{1024}}{\frac{d}{2} - \frac{m}{4}}\right)^{\frac{d}{2} - \frac{m}{4}} \tag{6.86}$$

$$\leq \exp\left(\frac{1}{1024} - \frac{d}{512m}\right). \tag{6.87}$$

This did not require anything but the norm of $\hat{w}$ being small, so for $d \geq \frac{m}{2} + 512m\log(2m)$, this ensures that

$$\mathbb{P}\left[\langle \hat{w}, v_i\rangle < -\frac{\sigma}{8bm} \;\middle|\; S, \|\hat{w}\| < \frac{2\sigma}{b\sqrt{m}}\right] \leq \frac{1}{2m}. \tag{6.88}$$

A union bound ensures that either $\|\hat{w}\| \geq \frac{2\sigma}{b\sqrt{m}}$ or $\langle \hat{w}, v_i\rangle \geq -\frac{\sigma}{8bm}$ for all $i \geq m/2$ with probability at least $1/2$ over the randomness in the algorithm and draw of $z_1, \ldots, z_m$, and consequently, that $\mathbb{E}_{\hat{w}} \|\nabla F(\hat{w})\|^2 \geq \frac{\sigma^2}{8m}$. Setting $m = \left\lfloor \frac{\sigma^2}{8\epsilon^2} \right\rfloor$ ensures this is at least ϵ. For this m, $b = \max\{\frac{\sigma}{R\sqrt{m}}, \frac{\sigma^2}{2\Delta m}\} \leq \frac{4\epsilon}{R} + \frac{4\epsilon^2}{\Delta}$ which must be less than H, consequently, this lower bound applies for $\epsilon \leq \min\{\frac{HR}{8}, \sqrt{\frac{H\Delta}{8}}\}$. □

Theorem 38. *For any $H, R, \sigma > 0$ and any $\epsilon \in (0, \sigma/2)$, there exists a $F : \mathbb{R} \to \mathbb{R} \in \mathcal{F}_{DB}[H, \lambda = 0; R]$ and a $\mathcal{O}^{\sigma}_{\nabla f}$, such that for any algorithm interacting with the stochastic first-order oracle, and returning an ϵ-approximate stationary point with some fixed constant probability, the expected number of queries is at least $\Omega\left(\frac{\sigma^2}{\epsilon^2} \cdot \log\left(\frac{HR}{\epsilon}\right)\right)$. Moreover, a similar lower bound of $\Omega\left(\frac{\sigma^2}{\epsilon^2} \cdot \log\left(\frac{H\Delta}{\epsilon^2}\right)\right)$ holds if the radius constraint R is replaced by a suboptimality constraint Δ.*

Proof. We prove the lower bound by reduction from the noisy binary search (NBS) problem: In this classical problem, we have N sorted elements $\{a_1, \ldots, a_N\}$, and we wish to insert a new element e using only queries of the form "is $e > a_j$?" for some j. Rather than getting the true answer, an independent coin is flipped and we get the correct answer only with probability $\frac{1}{2} + p$ for some fixed parameter p. Moreover, let j^* be the unique index such that $a_{j^*} < e < a_{j^*+1}$[12]. It is well-known (see for example Feige et al. (1994); Karp and Kleinberg (2007)) that in order to identify j^* with any fixed constant probability, at least $\Omega(\log(N)/p^2)$ queries are required.

[12]This is w.l.o.g., since if $e < a_1$ or $e > a_N$, we can just add two dummy elements smaller and larger than all other elements and e, increasing N by at most 2, hence not affecting the lower bound.

Let us first consider the case where the radius constraint R is fixed. We will construct a convex stochastic optimization problem with the given parameters, such that if there is an algorithm solving it (with constant probability) after T local stochastic oracle queries, then it can be used to solve an NBS problem (with the same probability) using $2T$ queries, where $p = \epsilon/\sigma$ and[13] $N = HR/4\epsilon$. Employing the lower bound above for NBS, this immediately implies the $\Omega\left(\frac{\sigma^2}{\epsilon^2} \cdot \log\left(\frac{HR}{\epsilon}\right)\right)$ lower bound in our theorem.

To describe the reduction, let us first restate the NBS problem in a slightly different manner. For a fixed query budget T, let Z be a $T \times N$ matrix, with entries in $\{-1, +1\}$ drawn independently according to the following distribution:

$$\Pr(Z_{t,j} = 1) = \begin{cases} \frac{1}{2} - p & j \leq j^* \\ \frac{1}{2} + p & j > j* \end{cases} .$$

Each $Z_{t,j}$ can be considered as the noisy answer provided in the NBS problem to the t-th query, of the form "is $e > a_j$" (where -1 corresponds to "true" and 1 corresponds to "false"). Thus, an algorithm for the NBS problem can be seen as an algorithm which can query T entries from the matrix Z (one query from each row), and needs to find j^* based on this information. Moreover, it is easy to see that the NBS lower bound also holds for an algorithm which can query *any* T entries from the matrix: Since the entries are independent, this does not provide additional information, and can only "waste" queries if the algorithm queries the same entry twice.

We now turn to the reduction. Given an NBS problem on $N = HR/4\epsilon$ elements with $p = \epsilon/\sigma$ and a randomly-drawn matrix Z, we first divide the interval $[0, R]$ into N equal sub-intervals of length R/N each, and w.l.o.g. identify each element a_j

[13] For simplicity we assume that $HR/4\epsilon$ is a whole number – otherwise, it can be rounded and this will only affect constant factors in the lower bound.

with the smallest point in the interval. Then, for every (statistically independent) row Z_t of Z, we define a function $f(w, Z_t)$ on $\mathbb{R}$ by $f(0, Z_t) = 0$, and the rest is defined via its derivative as follows:

$$f'(w; Z_t) = \begin{cases} -2\epsilon & x < 0 \\ 2\epsilon & x \geq R \\ \frac{w-a_j}{R/N}\sigma Z_{t,j+1} + \left(1 - \frac{w-a_j}{R/N}\right)\sigma Z_{t,j} & x \in [a_j, a_{j+1}) \text{ for some } j < N \end{cases}.$$

Note that by construction $\frac{w-a_j}{R/N} \in [0,1]$ and $Z_{t,j} \in \{-1,+1\}$, so $|f'(w, Z_t)| \leq \max\{2\epsilon, \sigma\} \leq \sigma$. Moreover, since the expected value of $\sigma Z_{t,j}$ is $\sigma \cdot (-2p) = -2\epsilon$ if $j \leq j^*$, and $\sigma \cdot 2p = 2\epsilon$ if $j > j^*$, it is easily verified that

$$\mathbb{E}_{Z_t}[f'(w, Z_t)] = \begin{cases} -2\epsilon & x < a_{j^*} \\ 2\epsilon & x \geq a_{j^*+1} \\ -2\epsilon + 4\epsilon\frac{w-a_j}{R/N} & x \in [a_{j^*}, a_{j^*+1}) \end{cases}.$$

Noting that $4\epsilon\frac{w-a_j}{R/N} = H(w - a_j) \in [0, 4\epsilon]$ in the above, we get that $F(w) := \mathbb{E}_{Z_t}[f(w, Z_t)]$ is a convex function with H-Lipschitz gradients, with a unique minimum at some $x : |x| < R$, and with $|F'(w)| \leq \epsilon$ only when $x \in [a_{j^*}, a_{j^*+1})$. Overall, we get a valid convex stochastic optimization problem (with parameters H, R, σ as required), such that if we can identify x such that $|F'(w)| \leq \epsilon$, then we can uniquely identify j^*. Moreover, given an algorithm to the optimization problem, we can simulate a query to a local stochastic oracle (specifying an iterate t and a point x) by returning $f'(w, Z_t)$ as defined above, which requires querying at most 2 entries $Z_{t,j}$ and $Z_{t,j+1}$ from the matrix Z. So, given an oracle query budget T to the stochastic problem, we can simulate it with at most $2T$ queries to the matrix Z in the NBS problem.

To complete the proof of the theorem, it remains to handle the case where there is a suboptimality constraint Δ rather than a radius constraint R. To that end, we

simply use the same construction as above, with $R = \frac{\Delta}{2\epsilon}$. Since the derivative of F has magnitude at most 2ϵ, and its global minimum satisfies $|w^*| \leq R$, it follows that $F(0) - F(w^*) \leq 2\epsilon R = \Delta$. Plugging in $R = \frac{\Delta}{2\epsilon}$ in the lower bound, the result follows. □

Theorem 32. *For any $H, \Delta, R, \sigma > 0$, any $\epsilon \leq \frac{HR}{8}$, the stochastic first-order oracle complexity for range-bounded functions is lower bounded as*

$$\mathsf{m}_\epsilon(\mathcal{F}_{DB}[H, \lambda = 0; R], \mathcal{O}^\sigma_{\nabla f}) \geq \Omega\left(\sqrt{\frac{HR}{\epsilon}} + \frac{\sigma^2}{\epsilon^2}\log\left(\frac{HR}{\epsilon}\right)\right).$$

For any $\epsilon \leq \sqrt{\frac{H\Delta}{8}}$, the stochastic first-order complexity for domain-bounded functions is lower bounded as

$$\mathsf{m}_\epsilon(\mathcal{F}_{RB}[H, \lambda = 0; \Delta], \mathcal{O}^\sigma_{\nabla f}) \geq \Omega\left(\frac{\sqrt{H\Delta}}{\epsilon} + \frac{\sigma^2}{\epsilon^2}\log\left(\frac{H\Delta}{\epsilon^2}\right)\right).$$

Proof. By Theorem 38, $\Omega(\sigma^2/\epsilon^2)\log(HR/\epsilon)$ and $\Omega(\sigma^2/\epsilon^2)\log(H\Delta/\epsilon^2)$ oracle calls (samples) are needed to find an ϵ-stationary point. Furthermore, a deterministic first-order oracle is a special case of a stochastic first-order oracle (corresponding to the case $\sigma = 0$). Therefore, lower bounds for deterministic first-order optimization apply also to stochastic first-order optimization. Therefore, the lower bound of (Carmon et al., 2017b, Theorem 1) completes the proof. □

Part II

Interactive Learning via Stochastic Optimization

CHAPTER 7

INTRODUCTION TO INTERACTIVE LEARNING

In the recent years, advances in machine learning has lead to empirical breakthroughs in various interactive learning settings including contextual bandits revolutionizing online advertising or healthcare (Tewari and Murphy, 2017), playing Atari 2600 video games at superhuman levels (Mnih et al., 2015), AlphaGo or AlphaGo Zero surpassing champions in Go (Silver et al., 2018), AlphaStar's victory over top-ranked professional players in StarCraft (Vinyals et al., 2019), or practical self-driving cars. In Part I, we considered the statistical learning setting, where the data-generating distribution (environment) was unaffected by the actions taken by the learner. In that case, we saw how a learner may obtain a good hypothesis by formulating the underlying statistical learning task as a stochastic optimization problem and then using simple first-order optimization algorithms SGD for solving them.

In contrast, in interactive learning, e.g. online advertising or robotics, both the learner and the environment may adapt to each other. Thus, the benchmark (test loss) on which the agent is evaluated may change over time. In addition to this, the agent only gets feedback about the environment for the actions which it took. This leads to a much harder learning setting, where the agent is required to learn how to perform well in an unknown and constantly changing environment, and that too only based on the experience that it has gathered so far, using its past actions. Given these differences, it is not immediately obvious if and how to formulate interactive learning problems as stochastic optimization problems.

In fact, various mathematical formulations like multi-armed bandits **?**, contextual

bandits **?**, Markov Decision Processes (MDPs)**?**, Decision Making with Structured Observations (DMSO)**?**, etc have been developed in the literature to capture these interactive learning problems. In the second part of the thesis, we will delve deeper into the MDPs and DMSO framework, and try to understand how one may still formulate these learning tasks as stochastic optimization problem, however due to interactivity, stochastic optimization now needs to be coupled with efficient exploration for optimal learning.

7.1 Interactive learning problems

In this section, we provide two formal frameworks popularly used to capture various interactive learning problems that arise in practice.

7.1.1 Reinforcement learning in MDPs

Markov Decision Processes (MDPs) are used to model decision making in situations where there is a fixed and unknown dynamics over some state space $\mathcal{X}$, and the transitions are determined by the actions chosen by the learning agent. We consider the episodic Markov decision framework[1] that consists of

- An integer H that define the horizon of the problem
- A state space $\mathcal{X}$, which may be potentially infinite.
- An action space $\mathcal{A} = \{a_1, \ldots, a_K\}$, which we assume to be finite.

[1]Another popular framework to model stochastic and stateful environments is that of infinite horizon discounted MDPs. We skip discussing this setting in the thesis, but refer the reader to the book draft by Agarwal et al. (2019) for more details.

- A reward function $r : \mathcal{X} \times \mathcal{A} \mapsto [0, 1]$, where $r(x, a)$ denotes the expected immediate reward for an action a on state x.
- A distribution $\mu_1 \in \Delta(\mathcal{X})$ over the starting states x_1.
- A transition kernel $T : \mathcal{X} \times \mathcal{A} \mapsto \Delta(\mathcal{X})$ such that $T(x' \mid x, a)$ defined the probability of transition to the state x' on taking action a on the state x.

Each episode in the MDP is a sequence of state, action, reward, i.e.

$$\tau = ((x_1, a_1, r_1), (x_2, a_2, r_2), \ldots, (x_H, a_H, r_H)) \in (\mathcal{X} \times \mathcal{A} \times \mathbb{R})^H,$$

where the initial observation x_1 is drawn from the initial distribution $\mu_1 \in \Delta(\mathcal{X})$, the actions are chosen by the learning agent, the next states are sampled from the transition kernel $x_{h+1} \sim T(\cdot|x_h, a_h) \in \Delta(\mathcal{X})$ and the rewards r_h are drawn from a sub-Gaussian distribution with mean $r(x_h, a_h)$ where $r\colon \mathcal{X} \times \mathcal{A} \mapsto [0, 1]$. The learning agent does not know the transition kernel T, the initial distribution μ_0, or the reward function r.

The agent is given a policy class $\Pi \subseteq \{\mathcal{X} \mapsto \Delta(\mathcal{A})\}$ consisting of policies that map states to distributions over the actions $\mathcal{A}$. For any policy $\pi \in \Pi$, we denote by $T^\pi \in \mathbb{R}^{\mathcal{X}\times\mathcal{X}}$, the transition matrix induced by π, i.e., for any $x, x' \in \mathcal{X}$,

$$[T^\pi]_{(x',x)} = \mathbb{E}_{a\sim\pi(x)}\, T(x' \mid x, a).$$

We denote by $\mathbb{P}^\pi$ the distribution over episodes when we take actions according to the policy π and use $\mathbb{E}^\pi$ to denote expectation w.r.t. $\mathbb{P}^\pi$. We define *expected policy rewards* as the expected rewards obtained at time h when following policy π starting from a state $x_1 \sim \mu_1$:

$$R_h^\pi := \mathbb{E}^\pi[r(x_h, a_h)]. \tag{7.1}$$

Each policy has an associated *value function*. Denoted by $V_1^\pi : \mathcal{X} \mapsto \mathbb{R}$, the value function for policy π is defined as

$$V_1^\pi(x) = \mathbb{E}^\pi\left[\sum_{h=0}^{H} r(x_h, a_h) \mid x_0 = x\right]. \tag{7.2}$$

Intuitively, for any state x, $V_1^\pi(x)$ denotes the expected reward obtained on running policy π for H steps in the underlying MDP, when starting from the state x. Using the value function, we define the **value** or **expected return of a policy** π, denoted by V^π, as

$$V^\pi := \mathbb{E}_{x_1 \sim \mu_1}[V_1^\pi(x_1)] = \sum_{h=1}^{H} R_h^\pi. \tag{7.3}$$

Learning objective. The goal of the learner is to return a policy that has high expected return in the underlying MDP. In particular, the learner aims to find a policy $\widehat{\pi}$ such that the expected return of the policy is comparable to the expected return of the best policy in a given class Π. In particular, we wish that after collecting n episodes in the MDP, the learning agent returns a policy $\widehat{\pi}$ such that

$$V^{\widehat{\pi}} \geq \max_{\pi \in \Pi} V^\pi - \epsilon(n),$$

or equivalently that

$$\max_{\pi \in \Pi}\left\{V^\pi - V^{\widehat{\pi}}\right\} \leq \epsilon(n), \tag{7.4}$$

where the error $\epsilon(n) \to 0$ as $n \to 0$.

By now, we have a good understanding of the rates at which we can bound (7.4), and the respective algorithms that obtain them, in the tabular MDP setting where both the state space $\mathcal{X}$ and the action space $\mathcal{A}$ are small (Kearns and Singh, 2002; Brafman and Tennenholtz, 2002; Azar et al., 2017; Dann et al., 2019). Here, one can give computationally efficient algorithms that guarantee that

$\epsilon(n) \propto \text{poly}(|\mathcal{X}|, |\mathcal{A}|, H, \frac{1}{n})$. However, these methods fail to scale for learning in MDPs with large state spaces (so called *rich observation settings*) that appear in practical applications like Atari, Go, etc (Mnih et al., 2015; Silver et al., 2018; Vinyals et al., 2019). In particular, for the rich observation settings, $|\mathcal{X}|$ or $|\Pi|$ could be astronomically large and thus we would like to avoid a linear dependence on either of them in the rate of convergence in (7.4). a desirable guarantee in the rich observation setting is that

$$\epsilon(n) \propto \text{poly}(H, |\mathcal{A}|, \log(|\Pi|), \frac{1}{n}). \tag{7.5}$$

Algorithms that obtain bounds of the form (7.5) are called statistically efficient. Unfortunately, without additional assumptions, obtaining bounds of the form (7.5) is not possible as established by the following lower bound

Theorem 39 (Krishnamurthy et al. (2016))**.** *For any H, K with $K \geq 2$ and any $\epsilon \in (0, \sqrt{1/8})$, there exists a family of MDPs with horizon H, $|\mathcal{A}| = K$, state space $\mathcal{X}$ and a policy class Π such that finding a policy $\widehat{\pi}$ with $V^{\widehat{\pi}} \geq \max_{\pi \in \Pi} V^{\pi} - \epsilon$ requires at least*

$$n \geq \frac{\min\Big\{|\mathcal{X}|, |A|^H, |\Pi|\Big\}}{\epsilon^2}$$

samples in expectation in some MDP in this family.

This lower bound suggests that without further assumptions, $\epsilon(n) \geq \sqrt{\min\{|\mathcal{X}|, |A|^H, |\Pi|\}/n}$ and is knows as the curse of dimensionality or the *curse of large state space* in RL. In Chapter 8, we will provide an algorithm that can circumvent this lower bound under the additional assumption that the MDP has low rank dynamics. Interestingly, the algorithm that we provide in Chapter 8 is based on a stochastic optimization formulation of the considered RL problem.

Role of optimization.

The learning objective in (7.4) closely resembles the statistical learning setting discussed in Chapter 2 (c.f. (7.2)). The role of the hypothesis class $\mathcal{W}$ in statistical learning is adopted by the policy class Π. Furthermore, suppose we define the cumulative reward for a policy π w.r.t. a given trajectory $\tau = \{(s_h, a_h, r_h)\}_{h\in[H]}$ as

$$f(\pi;\tau) = \left(\sum_{h=1}^{h} r_h\right) \cdot 1\{a_1 = \pi(x_1) \wedge \cdots \wedge a_h = \pi(x_h)\}, \tag{7.6}$$

i.e. the cumulative reward if the trajectory is such that the actions match what π would have done on the observed states, and 0 otherwise. Clearly, the definition in (7.3) implies that

$$V^\pi = \mathbb{E}_{\tau\sim\mathcal{D}^\pi}[f(\pi;\tau)], \tag{7.7}$$

where the distribution $\mathcal{D}^\pi$ is given by μ_1 and T^π and is unknown to the learner. This reformulation suggests a correspondence between the value of a policy and the test loss for a hypothesis in the statistical learning setting, and one may be tempted to try to formulate reinforcement learning in MDPs (in particular (7.4)) as a stochastic optimization problem over the policy class Π. This is unfortunate not as straightforward as in the statistical learning setting.

The key difficulty in formulating (7.4) as a stochastic optimization problem is that the expectation in (7.7) is over a distribution $\mathcal{D}^\pi$ that depends on the policy π being evaluated. This implies that data samples $S^{\pi_1} = \{\tau_1, \tau_2, \ldots, \tau_n\}$ sampled from $\mathcal{D}^{\pi_1}$ to get stochastic unbiased estimates of the corresponding oracle queriers at π_1 may not be of much use when the underlying policy changes. This is often known as the *exploration problem* in RL, and in the worst case we can have situations where the learner needs to evaluate each policy in Π independent by drawing fresh samples

for that policy, leading to an undesirable $|\Pi|$ dependence on the number of samples used for learning (bound (7.4)).

However, one can formulate RL as a stochastic optimization problem under additional assumptions on the transition dynamics. As we will see in Chapter 8, when the transition dynamics has a small rank, one can overcome the issue of collecting independent samples for each policy in Π, leading to an algorithm for which $\epsilon(n) = \mathrm{poly}(H, \log(|\Pi|))/\sqrt{n}$. The key idea that gives this improved sample complexity (that matches the desirable form of $\epsilon(n)$ in (7.5)) is that the expected policy rewards for any policy in an MDP with rank d satisfies an autoregression of order d. Thus, in order to estimate the value of a policy, we just need to estimate the initial expected rewards and the coefficients of autoregression and then extrapolate for all future time steps. Both the autoregression and the procedure to estimate its coefficients can be formulated as stochastic optimization problems.

7.1.2 Decision making with structured observations

While MDPs are useful to capture interactive learning problems in which the environment is fixed throughout the interaction, not all applications fall under this framework. In various applications, the environment may be changing with interactions, and thus it is important to develop algorithms that are provably robust in the fact of dynamic or even adversarial environments. In order to understand the complexity of learning in such non-stochastic interactive problems, we adopt an adversarial variant of the DMSO framework of Foster et al. (2021) consisting of T rounds, where at each round $t = 1, \ldots, T$:

1a. The learner selects a *decision* $\pi^{(t)} \in \Pi$, where Π is a *decision space*.

1b. Simultaneously, nature selects a *model* $M^{(t)} \in \mathcal{M}$, where $\mathcal{M}$ is a *model class*.

2. The learner receives a reward $r^{(t)} \in \mathcal{R} \subseteq \mathbb{R}$ and observation $o^{(t)} \in \mathcal{O}$ sampled via $(r^{(t)}, o^{(t)}) \sim M^{(t)}(\pi^{(t)})$, where $\mathcal{O}$ is the *observation space*. We abbreviate $z^{(t)} := (r^{(t)}, o^{(t)})$ and $\mathcal{Z} := \mathcal{R} \times \mathcal{O}$.

Here, each model $M = M(\cdot, \cdot \mid \cdot) \in \mathcal{M}$ is a conditional distribution $M : \Pi \to \Delta(\mathcal{R} \times \mathcal{O})$ that maps the learner's decision to a distribution over rewards and observations. This setting is quite general and subsumes (adversarial) bandit problems, where models correspond to reward functions (or distributions), as well as adversarial reinforcement learning, where models correspond to Markov decision processes (MDPs). In both cases, the model class $\mathcal{M}$ encodes prior knowledge about the decision making problem, such as structure of rewards or dynamics (e.g., linearity or convexity). The model class might be parameterized by linear models, neural networks, or other rich function approximators depending on the problem domain. **?**

For a model $M \in \mathcal{M}$, $\mathbb{E}^{M,\pi}[\cdot]$ denotes expectation under the process $(r, o) \sim M(\pi)$. We define $f^M(\pi) := \mathbb{E}^{M,\pi}[r]$ as the mean reward function and $\pi_M := \operatorname{argmax}_{\pi \in \Pi} f^M(\pi)$ as the decision with greatest reward for M. We let $\mathcal{F}_{\mathcal{M}} = \{f^M \mid M \in \mathcal{M}\}$ denote the induced class of reward functions. We measure performance via *regret* to the best fixed decision in hindsight:

$$\mathbf{Reg}_{\mathsf{DM}} := \sup_{\pi^\star \in \Pi} \sum_{t=1}^{T} \mathbb{E}_{\pi^{(t)} \sim p^{(t)}} \Big[f^{M^{(t)}}(\pi^\star) - f^{M^{(t)}}(\pi^{(t)}) \Big]. \tag{7.8}$$

This formulation—in which models are selected by a potentially adaptive adversary—generalizes Foster et al. (2021), who considered a *stochastic* setting where $M^{(t)} = M^\star$ is fixed across all rounds. Examples include:

- **Adversarial bandits.** With no observations ($\mathcal{O} = \{\varnothing\}$), the adversarial

DMSO framework is equivalent to the *adversarial bandit* problem with structured rewards. In this context, $\pi^{(t)}$ is typically referred to as an *action* or *arm* and Π is referred to as the *action space*. The most basic example here is the adversarial finite-armed bandit problem with A actions (Auer et al., 2002; Audibert and Bubeck, 2009; Hazan and Kale, 2011), where $\Pi = \{1, \ldots, A\}$ and $\mathcal{F}_{\mathcal{M}} = \mathbb{R}^A$. Other well-studied examples include adversarial linear bandits (Dani et al., 2007; Abernethy et al., 2008; Bubeck et al., 2012), bandit convex optimization (Kleinberg, 2004; Flaxman et al., 2005; Bubeck et al., 2017; Lattimore, 2020), and nonparametric bandits (Kleinberg, 2004; Bubeck et al., 2011; Magureanu et al., 2014).[2]

- **Reinforcement learning.** The adversarial DMSO framework encompasses finite-horizon, episodic online reinforcement learning, with each round t corresponding to a single episode: $\pi^{(t)}$ is a *policy* (a mapping from state to actions) to play in the episode, $r^{(t)}$ is the cumulative reward in the episode, and the observation $o^{(t)}$ is the episode's trajectory (sequence of observed states, actions, and rewards). Online reinforcement learning in the stochastic setting where $M^{(t)} = M^{\star}$ is fixed has received extensive attention (Jiang et al., 2017; Sun et al., 2019; Jin et al., 2020; Wang et al., 2020b; Du et al., 2021; Jin et al., 2021; Foster et al., 2021), but the adversarial setting we study has received less investigation. Examples include the adversarial MDP problem where an adversary chooses a sequence of tabular MDPs, which is known to be intractable (Liu et al., 2022), and the easier problem in which there is a fixed (known) MDP but rewards are adversarial (Neu et al., 2010; Zimin and Neu, 2013; Neu et al., 2014; Jin and Luo, 2020).

[2]Typically, these examples are formulated with deterministic rewards, which we encompass by restricting models in $\mathcal{M}$ to be deterministic. Our formulation is more general and allows for, e.g., semi-stochastic adversaries.

Understanding statistical complexity (i.e., minimax regret) for the DMSO setting at this level of generality is a challenging problem. Even if one restricts only to bandit-type problems with no observations, any complexity measure must capture the role of structural assumptions such as convexity or smoothness in determining the optimal rates. To go beyond bandit problems and handle the general setting, one must accommodate problems with rich, structured feedback such as reinforcement learning, where observations (as well as subtle features of the noise distribution) can reveal information about the underlying model.

Role of optimization. There are two main challenges in designing algorithms for which $\mathbf{Reg}_{\mathsf{DM}}$ is small. Firstly, the learner gets bandit feedback, i.e. only observes the effects of the actions that it takes. Secondly, the environment may change adversarially over interactions. These nuances make the adversarial decision making setting much more complex to analyze as compared to the standard statistical learning setting. However, as we will show in Chapter 9, one can indeed solve the adversarial decision making problem by reducing it to a corresponding full information online setting using an appropriate choice of loss estimators (to account for the bandit feedback). Our reduction is obtained by a per-step coupling between the bandit problem that the learner operates in and a full information problem solved using mirror descent. This coupling is indeed obtained by solving a stochastic optimization problem at every iteration. Furthermore, full information online learning and stochastic optimization are closely related , and we build on this connection to obtain algorithms for adversarial decision making.

CHAPTER 8

AGNOSTIC LEARNING IN LOW RANK MDPS

Reinforcement Learning (RL) has achieved several remarkable empirical successes in the last decade, which include playing Atari 2600 video games at superhuman levels (Mnih et al., 2015), AlphaGo or AlphaGo Zero surpassing champions in Go (Silver et al., 2018), AlphaStar's victory over top-ranked professional players in StarCraft (Vinyals et al., 2019), or practical self-driving cars. These applications all correspond to the setting of rich observations, where the state space is very large and where observations may be images, text or audio data. In contrast, most provably efficient RL algorithms are still limited to the classical tabular setting where the state space is small (Kearns and Singh, 2002; Brafman and Tennenholtz, 2002; Azar et al., 2017; Dann et al., 2019) and do not scale to the rich observation setting.

To derive guarantees for large state spaces, much of the existing work in RL theory relies on a *realizability* and a *low-rank* assumption (Krishnamurthy et al., 2016; Jiang et al., 2017; Dann et al., 2018; Du et al., 2019c; Misra et al., 2020; Agarwal et al., 2020b). Different notions of rank have been adopted in the literature, including that of a low-rank transition matrix (Jin and Luo, 2019), a low Bellman rank (Jiang et al., 2017), Wittness rank (Sun et al., 2019), Eluder dimension (Osband and Van Roy, 2014), Bellman-Eluder dimension (Jin et al., 2021), or bilinear classes (Du et al., 2021). These studies also show that learning without any such structural assumptions requires a sample size that grows exponentially in the time horizon of the MDP (Dann and Brunskill, 2015; Krishnamurthy et al., 2016; Du et al., 2019b). The choice of the most suitable and most general notion of rank is the topic of much active research in RL theory.

In comparison, the realizability assumption has received much less attention. This is the strong premise that the optimal value function belongs to the class of functions considered, which typically does not hold in practice. In many applications, the optimal value function $Q^\star$ is highly complex and we cannot hope to accurately approximate it in the absence of some strong domain knowledge. Can we relax the realizability assumption in RL?

Value-function realizability can be viewed as the analogue of the PAC-realizability assumption in classical statistical learning theory. That assumption rarely holds, which has motivated the development and analysis of numerous algorithms for the agnostic PAC learnability model. Those algorithms provably learn to predict as well as the best predictor in the given function class, independently of whether the Bayes predictor belongs to the class. The counterparts of such results in reinforcement learning are mostly unavailable, which prompts the following question: Can we derive a theory of agnostic reinforcement learning?

Here, we precisely initiate that study. In this agnostic setting, we adopt common structural assumptions, e.g. small rank of the transition matrix, but seek to learn to perform as well as the best policy in the given policy class, independently of how close this class represents the Bellman-optimal policy. Specifically, we study agnostic Reinforcement Learning (RL) with a fixed policy class Π in the episodic MDPs with rich observations. Provably sample-efficient algorithms for agnostic RL would be highly desirable but it is still unknown to what degree learning is possible in this setting. In this chapter, we provide new insights about learnability with structural assumptions in the absence of (approximate) realizability in RL.

8.1 Agnostic learning setup and the low rank assumption

We consider the episodic MDP framework introduced in Section 7.1.1. The learner interacts with an episodic MDP $M(\mathcal{X}, \mathcal{A}, H, T, r, \mu_1)$, and aims to find an ε-suboptimal policy in a given policy class $\Pi \subseteq \{\mathcal{X} \mapsto \mathcal{A}\}$, i.e. return a $\widehat{\pi}$ such that

$$V^{\widehat{\pi}} \geq \max_{\pi \in \Pi} V^{\pi} - \varepsilon, \tag{8.1}$$

where $V^{\widehat{\pi}}$ denotes the value of a policy π. The problem setting in (8.1) is also known as *agnostic RL*, as the learner only wishes perform as well as the best policy in the given class. We refer the reader to Section 7.1.1 for more details on the notation and the setup.

Agnostic RL without any additional structural assumptions has been considered in the past. By evaluating each policy in the class individually, one can easily obtain a sample complexity upper bound of $O(|\Pi|/\varepsilon^2)$. Kearns et al. (2000) also showed that an upper bound of $(K^H \log |\Pi|)/\varepsilon^2$ is possible. However, such rates are rather unsatisfactory when H is long, Π is large and the MDP has a rich state space with $|\mathcal{X}| \gg d$ (which is the case in many practical problems). In fact, as we discussed in 7.1.1 via Theorem 39, there exists MDP settings where one needs to collect

$$n \geq \frac{\min\Big\{|\mathcal{X}|, |A|^H, |\Pi|\Big\}}{\varepsilon^2} \tag{8.2}$$

samples in-order to find an ε-suboptimal policy w.r.t. Π. (8.2) is prohibitively large for practical applications. Thus, to make the problem tractable, in this chapter, we assume that the transition dynamics for the MDP has a low rank. In particular,

Assumption 9 (Low-rank transition)**.** There exists $d \in \mathbb{N}$ such that for any $\pi \in \Pi$

$$\operatorname{rank}(T^{\pi}) \leq d,$$

where T^π denotes the transition matrix induced by π, i.e., for any $x, x' \in \mathcal{X}$, $[T^\pi]_{(x',x)} = \mathbb{E}_{a\sim\pi(x)} T(x' \mid x, a)$..

Throughout the chapter, we assume that the learner knows the value of d, but remark that adaptivity to unknown d is possible. We define $\lambda^\pi = (\lambda_1^\pi, \ldots, \lambda_d^\pi)^\top \in \mathbb{C}^d$ to denote the eigenvalues of the transition matrix T^π with rank at most d. Without any loss of generality, assume that $|\lambda_1^\pi| \geq |\lambda_2^\pi| \geq \ldots \geq |\lambda_d^\pi|$.

However, we view the main benefit of these results to be the initiation of the study of agnostic reinforcement learning and the presentation of an in-depth analysis of a natural structural assumption within that setting. This can form the basis for future research in this domain with alternative and perhaps more favorable rank-type assumptions.

8.1.1 Why low rank MDPs?

Recently there has been great interest in designing RL algorithms with general function approximation (Jiang et al., 2017; Dann et al., 2018; Sun et al., 2019; Du et al., 2019c; Wang et al., 2020c; Du et al., 2021). In particular, Jiang et al. (2017) introduced the notion of Bellman rank, a measure of complexity that depends on the underlying environment and the value function class $\mathcal{F}$, and provide statistically efficient algorithms for learning problems for which Bellman rank is bounded. This was later extended to model-based algorithms by Sun et al. (2019). While these algorithms work across a variety of problem settings, their sample complexity scales with $\log(|\mathcal{F}|)$. Furthermore, these algorithms also require the optimal value function f^* to be realized in $\mathcal{F}$. In our work, we do not assume that the learner has access to a value function class $\mathcal{F}$. In fact, given a value function class $\mathcal{F}$, we

can construct the policy class $\Pi_{\mathcal{F}}$ that corresponds to greedy policies induced by the class $\mathcal{F}$. However, given just a policy class Π, one cannot construct a value function class, without additional knowledge of the underlying dynamics.

Our Assumption 9 implies that for any policy $\pi \in \Pi$, the transition dynamics exhibits a low-rank decomposition with dimension d, that is $T^{\pi}(x'|x) = \langle \phi^{\pi}(x), \psi^{\pi}(x') \rangle$, for some d-dimensional feature maps $\phi^{\pi}, \psi^{\pi} \colon \mathcal{X} \mapsto \mathbb{R}^d$. Low rank MDPs and linear transition models have recently gained a lot of attention in the RL literature (Yang and Wang, 2020; Jin et al., 2020; Modi et al., 2020; Wang et al., 2019). The works most closely related to our setup are those of Jin et al. (2020) and Yang and Wang (2020), who give algorithms to find optimal policy in low rank MDPs with known feature maps ϕ. Similarly, the other algorithms also assume that the learner either observes the feature $\phi(x)$, or the feature $\psi(x)$. Agarwal et al. (2020b) and Modi et al. (2021) learn under weaker assumptions and only assume that the learner has access to a function class that realizes ϕ. However, in our setup, the learner neither observes the features ϕ^{π}, ψ^{π} nor has access to a realizable function class for them, and thus these methods are not applicable.

Several of the works mentioned above recognize the issue of a strict realizability assumption and provide results only when the function class contains a good approximation to the optimal value function of model. However, the goal in our agnostic setting is more ambitious. We would like to find a policy that can compete with the best policy in the given class Π, independent of how close the best return in the class $\max_{\pi \in \Pi} V^{\pi}$ is to the return of the optimal policy $V^{\pi^\star}$ for that MDP.

There have also been several approaches for provably efficient RL with non-parametric function classes (Yang et al., 2020; Long et al., 2021; Shah et al., 2020).

However, these approaches still aim to learn the optimal value function and their regret necessarily scales with the complexity of the optimal value function in the RKHS which can be very high. Instead, in our agnostic setting we would like to be able to quickly identify the best policy from the given policy class with low complexity containing a good but not necessarily optimal policy.

8.1.2 Comparison to prior works

Provably sample-efficient learning algorithms have been well studied in the classical tabular RL literature (Kearns and Singh, 2002; Brafman and Tennenholtz, 2002). However, the number of samples required by these algorithms to find the optimal policy π^* scales with the size of the state space $|\mathcal{X}|$ (Jaksch et al., 2010; Lattimore and Hutter, 2012), and thus these methods fail to scale to the rich observation settings where $|\mathcal{X}|$ could be astronomically large. There have been significant recent advances in developing efficient algorithms for such rich observation settings, albeit under additional assumptions. The two main styles of assumptions considered in the literature to make learning tractable are: (a) the learner has access to a value function class $\mathcal{F}$ that realizes the optimal value function f^* for the underlying MDP, and (b) the underlying transition dynamics admits additional structure such as low rank or linear decomposition, etc. We note that the goal of these works is to find the optimal policy for the underlying MDP. In comparison, in our work, we assume access to a policy class Π and our goal is to find a policy $\widetilde{\pi}$ that could compete with the best policy in the class Π. In the following, we compare our setup with the assumptions made in the prior work.

RL with general value function approximation. Recently there has been great interest in designing RL algorithms with general function approximation (Jiang et al., 2017; Dann et al., 2018; Sun et al., 2019; Du et al., 2019c; Wang et al., 2020c). In particular, Jiang et al. (2017) introduced the notion of Bellman rank, a measure of complexity that depends on the underlying environment and the value function class $\mathcal{F}$, and provide statistically efficient algorithms for learning problem for which Bellman rank is bounded. This was later extended to model-based algorithms by Sun et al. (2019). While these algorithms work across a variety of problem settings, their sample complexity scales with $\log(|\mathcal{F}|)$. Furthermore, these algorithms also require the optimal value function f^* to be realized in $\mathcal{F}$. In our work, we do not assume that the learner has access to a value function class $\mathcal{F}$. In fact, given a value function class $\mathcal{F}$, we can construct the policy class $\Pi_{\mathcal{F}}$ that corresponds to greedy policies induced by the class $\mathcal{F}$. However, given just a policy class Π, one can not construct a value function class, without additional knowledge of the underlying dynamics.

Example 1. Let $\mathcal{X} = \{0, 1, \ldots, N\}$, $\mathcal{A} = \{0, 1\}$, $\Pi = \{\pi_0, \pi_1\}$ and $H = 2$. For every action $a \in \mathcal{A}$, we define the reward $r(x, a) = 1$ when x is even, and $r(x, a) = 0$ when x is odd. Further, we assume that the transition dynamics T is parameterized by a vector $p \in \{0, 1\}^N$ such that for any state x, if $p(x) = 1$, then the next state x' is sampled uniformly at random from the set of even numbers in $\mathcal{X}$, independent of the chosen action. When $p(x) = 0$, we sample an odd number uniformly at random for x'. Thus, in order to learn the optimal value function, the leaner needs to recover the value of the vector p on at least $O(N)$ states. From standard packing arguments, we get that in N dimensions there are at least $2^{O(N)}$ vectors that are $O(N)$ apart. Thus, any appropriate value function class $\mathcal{F}$ that contains p must have size at least $2^{O(N)}$.

Linear MDP assumption. Our Assumption 9 implies that for any policy $\pi \in \Pi$, the transition dynamics exhibits a low-rank decomposition with dimension d, that is $T^\pi(x'|x) = \langle \phi^\pi(x), \psi^\pi(x') \rangle$,, for some d-dimensional feature maps $\phi^\pi, \psi^\pi \colon \mathcal{X} \mapsto \mathbb{R}^d$. Low rank MDPs and linear transition models have recently gained a lot of attention in the RL literature (Yang and Wang, 2020; Jin et al., 2020; Modi et al., 2020; Wang et al., 2019). The works most closely related to our setup are those of Jin et al. (2020) and Yang and Wang (2020), who give algorithms to find optimal policy in low rank MDPs with known feature maps ϕ. Similarly, the other algorithms also assume that the learner either observes the feature $\phi(x)$, or the feature $\psi(x)$. However, in our setup, the learner neither observes the features ϕ^π nor the features ψ^π, thus restricting application of these algorithms to our setting.

A new line of work, initiated by Agarwal et al. (2020b), focuses on the representation learning question in the above setting. They assume that the feature functions ϕ and ψ, although not known to the learner, are realized in the given classes Φ and Ψ respectively. In order to find the optimal policy, their algorithm first identifies the underlying feature functions ϕ^* and ψ^*, and thus, their sample complexity guarantees scale with $\log(|\Phi||\Psi|)$. Later, Modi et al. (2021) show that a similar approach also works when the learner has only access to a Φ but not Ψ. In comparison, we do not assume knowledge of either classes Φ or Ψ, and instead work with a policy class Π. In fact, the following simple illustrative example shows that the feature function Φ could be arbitrarily complex even when $|\Pi|$ is small, and thus we can not hope to learn the feature function from samples.

Example 2. Let $\mathcal{X} = [N]$, $\mathcal{A} = \{0, 1\}$. We define the feature function $\psi(x) \in \mathbb{R}^2$ such that $(1/2N, 0)^\top$ if x is even and $(0, 1/2N)^\top$ if x is odd. Further, for $\lambda \geq 0$, define the feature function $\phi_\lambda(x) \in \mathbb{R}^2$ such that $\phi_\lambda(x) = (1, 0)^\top$ if $\sin(x/\lambda) \geq 0$,

and $\phi_\lambda(x) = (0,1)^\top$ otherwise. In this MDP, the next state x' is either sampled uniformly at random from the set of even numbers in $\mathcal{X}$ or sampled uniformly at random from the set of odd numbers in $\mathcal{X}$, depending on the value of $\sin(x/\lambda)$.

Note that the mapping $x \mapsto \sin(x/\lambda)$ could be arbitrarily complex when λ is small. In fact, the function class $\Phi = \{\lambda \mid x \mapsto \sin(x/\lambda)\}$ has infinite VC dimension. Thus, one cannot hope to learn the feature function ϕ_λ from samples.

It is worth noting that in the above example, FLAMBE (Agarwal et al., 2020b), MOFFLE (Modi et al., 2021), or in fact any other approach that attempts to recover the feature function ϕ, as mentioned above will not succeed. Furthermore, when $|\Pi|$ is large and the length of the episode H is large, the previously known agnostic upper bounds of $\frac{|\Pi|}{\varepsilon^2}$ or $\frac{2^H \log(|\Pi|)}{\varepsilon^2}$ are also prohibitively large. However, in the above example, our algorithm enjoys a sample complexity bound of $\frac{H^4 \log(|\Pi|)}{\varepsilon^2}$.

Finally, note that in our setup, the decomposition of the induced transition kernel (into ϕ^π and ψ^π) may be different for each policy π in the class Π. Furthermore, there may be policies outside of Π that do not even exhibit such a low-rank decomposition. Thus, although our low rank assumption is similar to those in linear or low-rank MDPs (Agarwal et al., 2020b), our model is more general.

Comparison to Block MDP model. Krishnamurthy et al. (2016) introduced the block MDP model, where a small number of latent states $\mathcal{S}$ govern the transition dynamics, and the observations $x \in \mathcal{X}$ are generated depending on the current latent state s. In this model, there is a decoding function g^* that maps observations x back to the latent state s that generates x. Du et al. (2019c); Misra et al. (2020) assume that the learner is given a realizable class of decoding functions $\mathcal{G}$ and show

that the true mapping $g^* \in \mathcal{G}$ can be learnt efficiently, both computationally and statistically, which can then be used to find the optimal policy. However, note that the transition matrix in a Block MDPs with S latent states has rank at most $|S|$, and thus their model is captured by our Assumption 9. However, in our setup, we do not assume that the leaner has access to the class $\mathcal{G}$. In fact, Example 2 above shows that the latent state map g^* (the mapping $\phi_\lambda(x)$ in that case) could be arbitrarily complex even when Π is small, and thus we can not hope to learn g^* from samples.

Policy gradient methods. Model free direct policy search algorithms that directly maximize the value function have shown tremendous empirical success (Kakade, 2001; Kakade and Langford, 2002; Levine and Koltun, 2013; Schulman et al., 2015, 2017), and recently, have been analysed from a theoretical perspective (Agarwal et al., 2021a; Abbasi-Yadkori et al., 2019; Bhandari and Russo, 2019; Liu et al., 2020; Agarwal et al., 2020a). While these methods operate directly on a policy class Π, as we do in our work, they require additional modelling assumptions in order to succeed; foremost being that the policy class Π exhibits a differentiable paraeterization. Further assumptions include that the policy class Π contains the optimal policy π^*, the policy class Π has a good coverage over the state space (Agarwal et al., 2021a), and that the underling MDP has a linear factorization with known feature maps (Agarwal et al., 2020a). We do not require these assumptions.

DICE/DualDICE algorithms. Recent works of Liu et al. (2018) and Nachum et al. (2019) provide estimators that do not suffer the curse of horizon, i.e. the factor of A^H, in off-policy estimation of expected policy rewards by applying im-

portance sampling on average visitation distributions of single steps of state-action pairs, instead of the much higher dimensional distribution of the whole trajectories. However, their estimator requires access to a function class $\mathcal{H}$ that contains the importance weights of the average visitation distribution. We do not require access to such a class $\mathcal{H}$ in our estimator of expected policy rewards.

POMDP with reactive policies. We will show in the following that our theory and algorithm applies to partially observable Markov decision processes (POMDPs), as long as policies are reactive, that is, only take the current observation into account. Although existing works such as (Jiang et al., 2017) show polynomial sample-complexity bounds for POMDPs with reactive policy classes, they require the *optimal* policy to be reactive, which is not true in POMDPs in general. In contrast, we can handle the important scenario where reactive policies can achieve good but not necessarily close to optimal performance and we are interested in finding the best such policy.

A POMDP consists of a MDP with finite state space $\mathcal{S}$, action space $\mathcal{A}$ and horizon H where observed rewards at each step are drawn from a distribution with mean $r(s_h, a_h)$ that depends on the current state s_h and action a_h. Similarly, the next state is drawn fron a transition kernel $P(s_{h+1}|s_h, a_h)$. However, in a POMDP, the current state is not observable and the agent instead receives an observation $x_h \in \mathcal{X}$. We consider the formulation where the observation is drawn from a distribution $O(x_h|s_h)$ that depends on the current latent state s_h. Unlike in, e.g., Block MDP models, x_h does not need to be sufficient to decode s_h and this model does not need to be an MDP over the observation space $\mathcal{X}$. As a consequence, the optimal actions do in general depend on *all* previous observations. Nonetheless, reactive policies which are of the form $\mathcal{X} \to \mathcal{A}$ and only take the current observation into

account, often achieve good performance and are of particular interest in practice due to their simplicity.

Since a POMDP may not be a MDP over observations, such models are formally outside of our scope. However, as our technique never explicitly accesses observations except through the policy, we can cast a POMDP problem as follows in our framework. For any policy $\pi\colon \mathcal{X} \to \mathcal{A}$ in our policy class Π we define a stochastic policy π' over latent states as $\pi'(a|s) = \sum_{x\in\mathcal{X}} \mathbb{1}\{\pi(x) = a\}O(x|s)$ and denote the class of these policies by $\Pi' \subseteq \mathcal{S} \to \Delta(\mathcal{A})$. Running our algorithms on a POMDP with policy class Π is equivalent to running them on an MDP with direct access to latent states $\mathcal{S}$ and policy class Π'. Since an MDP with finite state space $\mathcal{S}$ has rank at most $|\mathcal{S}|$, our guarantees apply to POMDPs with a reactive policy class and we can set $d = |\mathcal{S}|$.

Exponential lower bounds for planning and offline RL. Several publications (Wang et al., 2020a; Zanette, 2020; Weisz et al., 2021) recently provide exponential lower bounds for learning the optimal policy with access to a realizable linear Q-function class $\mathcal{F}$ of dimension d in several settings. Most related is Wang et al. (2020a), wo study offline RL where the agent has only access to a dataset of transition samples and show even if the dataset has good coverage of the features of $\mathcal{F}$, a sample complexity that is exponential in d or H is unavoidable. In contrast, we allow the agent to collect samples arbitrarily by interacting with the MDP and although our algorithms first collect a dataset non-adaptively, the uniform action choices ensure good state coverage as opposed to just feature coverage which avoids the existing lower bounds.

8.2 Upper bound: Agnostic RL in low rank MDPs

In this section, we provide an algorithm for finding a policy that is close to the best-in-class in Π, when the transition dynamics of the MDP has a small rank. Our algorithm presented in Algorithm 5, is an instance of policy search with uniform exploration. Specifically, we first collect a dataset $\mathcal{D}$ of n episodes by picking actions uniformly at random and subsequently use those episodes to estimate the value of each policy in Π. The algorithm then simply returns the policy $\widetilde{\pi}$ with the highest estimated value.

Our main technical innovation is a new estimation procedure for policy values in Algorithm 6 that leverages the low-rank structure of the transition matrix. A straightforward way to estimate the policy value is to take the sum of the rewards on average across all episodes where all actions are consistent with the policy (Kearns et al., 2000). Unfortunately, this rejection sampling approach yields an error of $\Omega(\sqrt{K^H})$. Instead, our procedure only estimates the expected policy rewards for the first $3d$ steps. Specifically, when invoked with a given policy π, ValEstimate estimates the expected rewards for that policy by considering the subset of trajectories in $\mathcal{D}$ where π agrees with the chosen action till the first 3d steps, and by averaging the observed rewards in those trajectories. ValEstimate then predicts the future expected rewards for that policy by extrapolating these $3d$ estimated expected rewards. The prediction is computed by recognizing that the expected rewards for any policy π satisfy an autoregressive relation of order d as shown in Lemma 56.

In order to find the coefficients of this autoregression, ValEstimate computes $\widehat{\lambda} \in \mathbb{C}^d$ by solving the optimization problem (8.4), where the coefficient $\alpha_k(\lambda)$ are the

sum of degree k monomials:

$$\alpha_k(\lambda) = \sum_{x \in \{0,1\}^d \text{ s.t. } \|x\|_1 = k} \lambda_1^{x_1} \lambda_2^{x_2} \dots \lambda_d^{x_d}. \tag{8.3}$$

After estimating $\widehat{\lambda}$, ValEstimate then predicts the expected rewards for all future time steps for the policy π by unfolding the autoregression model whose coefficients are given by $\alpha_k(\widehat{\lambda})$. The estimate for the value of the given policy π, denoted by $\widetilde{V}^\pi$, is then computed as the sum of the predicted expected rewards for H steps.

Finally, Algorithm 5 returns the policy $\widetilde{\pi}$ whose estimated value function is highest amongst all the policies in Π. The following theorem characterizes the performance guarantee for the policy $\widetilde{\pi}$ returned by our algorithm.

Theorem 40 (Main Theorem)**.** *For a given $\delta \in (0,1)$, d-rank MDP, horizon $H \geq d$ and a finite policy class Π, after collecting n episodes, Algorithm 5 returns a policy $\widetilde{\pi}$ that with probability at least $1-\delta$ admits the following guarantee:*

$$V^{\widetilde{\pi}} \geq \max_{\pi \in \Pi} V^\pi - O\Big(d^3 \cdot \Big(\frac{H}{d}\Big)^{2d} \sqrt{\frac{K^{3d} \log(6\Pi d/\delta)}{n}}\Big).$$

Theorem 40 implies that Algorithm 5 can find an ε-optimal policy with probability $1-\delta$ as long as the number of samples n is larger than

$$n \gtrsim \Big(\frac{H}{d}\Big)^{4d} \frac{K^{3d} \log(6d|\Pi|/\delta)}{\varepsilon^2}.$$

Algorithm 5 Policy search algorithm

Input: horizon H, rank d, number of episodes n, finite policy class Π

1: Collect the dataset $\mathcal{D} = \{(x_h^t, a_h^t, r_h^t)_{h=1}^H\}_{t=1}^n$ of n trajectories by drawing actions from Uniform($\mathcal{A}$).

2: **for** policy $\pi \in \Pi$ **do**

3: Estimate $\widetilde{V}^\pi$ by calling ValEstimate$(H, d, \mathcal{D}, \pi)$.

4: **Return:** policy $\widetilde{\pi}$ with best estimated value, i.e. $\widetilde{\pi} \in \text{argmax}_{\pi \in \Pi} \widetilde{V}^\pi$.

Algorithm 6 Value estimation by autoregressive extrapolation

1: **function** ValEstimate$(H, d, \mathcal{D}, \pi)$:

2: **for** time step $h = 1, \ldots, 3d$ **do**

3: Estimate expected rewards by importance sampling

$$\widehat{R}_h = \frac{1}{n} \sum_{t=1}^{n} r_h^t \prod_{h' \leq h} \left(K \mathbb{1}\{\pi(x_{h'}^t) = a_{h'}^t\} \right)$$

4: Estimate eigenvalues of the autoregression by solving the optimization problem:

$$(\widehat{\lambda}, \widehat{\Delta}) \leftarrow \underset{\lambda \in \mathbb{C}^d, \Delta \in \mathbb{R}}{\operatorname{argmin}} \ \Delta \qquad \text{s.t.} \ \ |\lambda_k| \leq 1 \qquad \text{for } k = 1, \ldots, d \tag{8.4}$$

$$\text{and} \quad \left| \sum_{k=1}^{d} (-1)^{k+1} \alpha_k(\lambda) \widehat{R}_{h-k} - \widehat{R}_h \right| \leq \Delta \qquad \text{for } h = d+1, \ldots, 3d$$

5: Predict $\widetilde{R}_h$ as:

$$\widetilde{R}_h = \begin{cases} \widehat{R}_h & \text{for } \ 1 \leq h \leq d \\ \sum_{k=1}^{d} (-1)^{k+1} \alpha_k(\widehat{\lambda}) \widetilde{R}_{h-k} & \text{for } \ d+1 \leq h \leq H \end{cases}. \tag{8.5}$$

6: **return:** Estimate of the value $\widetilde{V} = \sum_{h=1}^{H} \widetilde{R}_h$.

The key idea used in ValEstimate, is that for any policy π for which $\operatorname{rank}(T^\pi) \leq d$, the expected rewards satisfy an auto-regression of order d. The following lemma formalize this idea.

Lemma 56 (Autoregression on expected rewards)**.** *Let π be any policy for which the transition matrix T^π has rank at most d. Then, for any time step $h \geq d+1$, the expected reward for policy π at time step h, denoted by R_h^π, satisfies the autoregression*

$$R_h^\pi = \sum_{k=1}^{d} (-1)^{k+1} \alpha_k(\lambda^\pi) R_{h-k}^\pi, \tag{8.6}$$

where $\lambda^\pi \in \mathbb{C}^d$ denotes the set of eigenvalues of the matrix T^π, and $\alpha_k(\lambda^\pi)$ is as defined in (8.3).

We defer the proof of Lemma 56 to Section 8.4.2. The proof uses the fact that for any policy $\pi \in \Pi$, the distribution over observations at time step h is given by $\mu_h^\pi = (T^\pi)^h \mu_0$, where μ_0 denotes the distribution over the observation space at initialization. If $\text{rank}(T^\pi) \leq d$, an application of the Cayley-Hamilton theorem implies that we can write $(T^\pi)^h$ as a linear combination of $((T^\pi)^{h-1}, \ldots, (T^\pi)^{h-d})$. This implies that μ_h^π, and thus the expected rewards R_h^π, satisfy an auto-regression of order d. While the expected rewards R_h^π satisfy an auto-regression for every policy π, note that we cannot hope for a similar relation between the instantaneous rewards $r_h(s_h^\pi, \pi(s_h))$ observed when taking actions according to π.

The following result shows that we can simultaneously estimate the expected rewards for the first $3d$ steps for every policy $\pi \in \Pi$. Let $\mathcal{D}$ be a dataset of n episodes in the MDP collected by drawing actions uniformly at random from $\mathcal{A}$. Then, for any policy π, there are approximately n/K^{3d} episodes in $\mathcal{D}$ where the actions taken during the first $3d$ time steps matches the predictions of π on those observations. We compute $\widehat{R}_h^\pi$ as the empirical average of the hth step reward in the corresponding n/K^{3d} episodes that match with π for the first $3d$ steps.

Lemma 57 (Importance sampling)**.** *For any $\delta \in (0,1)$, with probability at least $1-\delta$, for any policy $\pi \in \Pi$ and time step $h \in [3d]$, the estimates $\widehat{R}_h^\pi$ computed using importance sampling satisfy the error bound*

$$|\widehat{R}_h^\pi - R_h^\pi| \leq \sqrt{\frac{2K^{3d}\log(6d|\Pi|/\delta)}{n}} + \frac{2K^{3d}\log(6d|\Pi|/\delta)}{n}.$$

For a given policy π, if we had access to the expected rewards $\{R_1^\pi, \ldots, R_d^\pi\}$, we could have solved for the coefficients $\alpha_k(\lambda)$ exactly. However, we only have access to the empirical estimates $\{\widehat{R}_1, \ldots, \widehat{R}_d\}$ of the expected rewards, and thus we compute the coefficients $\alpha_k(\widehat{\lambda})$ by solving the optimization problem in (8.4). We

predict the future expected rewards by extrapolating using $\alpha_k(\widehat{\lambda})$. The following lemma bounds the error propagated due to this mismatch in our estimation.

Lemma 58 (Error propagation bound)**.** *Let* $\lambda, \widehat{\lambda} \in \mathbb{C}^d$ *be such that* $\max\{|\lambda_1|, |\widehat{\lambda}_1|\} \leq 1$. *Further, with the initial values* $R_1, \ldots, R_d$ *and* $\widetilde{R}_1, \ldots, \widetilde{R}_d$, *let the sequence* $\{R_h\}$ *and* $\{\widetilde{R}_h\}$ *be given by*

$$R_h = \sum_{k=1}^{d} (-1)^{k+1} \alpha_k(\lambda) R_{h-k} \qquad \textit{and} \qquad \widetilde{R}_h = \sum_{k=1}^{d} (-1)^{k+1} \alpha_k(\widehat{\lambda}) \widetilde{R}_{h-k},$$

where the coefficients $\alpha_k(\lambda)$ *and* $\alpha_k(\widehat{\lambda})$ *are define as in* (8.3)*. Then, for all* $h \geq 3d + 1$,

$$|\widetilde{R}_h - R_h| \leq 2d \cdot \left(\frac{16eh}{d}\right)^{2d} \cdot \max_{h' \leq 3d} |R_{h'} - \widetilde{R}_{h'}|.$$

We defer the proof of Lemma 58 to Section 8.4.2. The proof of Theorem 40 follows from combining the above three technical results. Lemma 56 suggests that for any policy $\pi \in \Pi$ for which $\text{rank}(T^\pi) \leq d$, the expected per step rewards satisfy an auto-regression of order at most d. The error propagation bound in Lemma 58 and the bound on the estimation of the expected rewards for the first $3d$ steps given in Lemma 58 implies that, for every policy $\pi \in \Pi$, the estimated value $\widetilde{V}^\pi$ is close to the true value V^π. Specifically, the estimation error in the value of every policy in π is bounded by $\widetilde{O}((H/d)^{2d}\sqrt{K^{3d}\log(|\Pi|)/n})$. Thus, when $n = \widetilde{O}((H/d)^{4d}K^{3d}/\varepsilon^2)$, we have that $|\widetilde{V}^\pi - V^\pi| \leq \varepsilon$ for every policy $\pi \in \Pi$ simultaneously. This implies that the returned policy , that maximize the estimated value $\widetilde{V}^\pi$, is 2ε sub-optimal w.r.t. the best policy in Π. We defer full details of the proof of Theorem 40 to Section 8.4.2.

8.3 Matching lower bound

After presenting an algorithm with sample-complexity bound of $\widetilde{O}((H/d)^{2d}K^{3d}/\varepsilon^2)$, we now show through a lower-bound that the dependency on H and d cannot be improved significantly:

Theorem 41. *Let $\varepsilon \in (0, 1/26)$, $\delta \in (0, 1/2)$, $d \geq 4$, $K = 2$ and $H \geq 219d$. There exists a policy class of size $(H/d)^d$ and a family of MDPs with rank at most $\Theta(d)$, finite observation space, horizon H and two actions such that the optimal policy for each MDP in the family is contained in the policy class and the following holds: Any algorithm that returns an ε-optimal policy, with probability at least $1 - \delta$, for every MDP in this family has to collect at least*

$$\Omega\Big(\frac{1}{H\varepsilon^2}\Big(\frac{H}{41d}\Big)^{d/2}\log\Big(\frac{1}{2\delta}\Big)\Big) \ .$$

episodes in expectation in some MDP in this family.

The above lower bound shows that an exponential dependency on d in the form of $(H/d)^d$ is unavoidable, even when a realizable policy class with $\pi^* \in \Pi$ and moderate size $\log|\Pi| = d\log(H/d)$ is given to the learner. We now provide a brief description of the problem class used in the proof of our lower bound but defer details of our construction and the proof to Section 8.4.3.

The Markov decision processes in the proof of our lower bound bear some similarity to the so-called *combination lock* constructions used in prior works (Krishnamurthy et al., 2016; Du et al., 2019b), where the algorithm only receives positive feedback after playing a certain sequence of actions. Modelling a combination lock typically requires K^H states in MDPs and $\Theta(H)$ latent states in POMDP. In contrast, our contextual version of a combination lock uses a low-rank MDP with very large

observation space but where the transition dynamics are governed by $\Theta(d) \ll H$ hidden states (and thus the rank is $\Theta(d)$). The latent state structure is shown in Figure 8.2. The agent starts at the top left latent state and always progresses with probability $p = d/H$ to the right. As long as it chooses good actions (blue edges), it progresses in the top chain where it will eventually reach state (d, g) with constant probability and receive a reward of 1 with probability $1/2 + \varepsilon$. If at any time before reaching state (d, g), it chooses a bad action (red edges), then it moves to the lower chain where it eventually has a $1/2$ chance of receiving a reward of 1.

If the latent states $s \in \mathcal{S}$ were directly observable, an ε-optimal policy could be learned with $O(dH/\varepsilon^2)$ samples. However, in the latent state s, the agent only receives an observation drawn uniformly from a large set $\mathcal{X}_s$. The sets $\{\mathcal{X}_s\}_{s\in\mathcal{S}}$ form a partition of the entire observation space $\mathcal{X}$ and there is a mapping $\phi\colon \mathcal{X} \mapsto \mathcal{S}$ that identifies the latent state for each observation. Each MDP $M_{\pi^*,\phi}$ in our problem class is parameterized by the mapping ϕ and a policy $\pi^* \in \Pi$. The class of policies Π can be arbitrary as long as each pair of policies differ on at least a constant fraction of $\mathcal{X}$. In MDP $M_{\pi^*,\phi}$, only the action $\pi^*(x)$ is a good action (blue action) and allows the agent to stay in the top latent state chain. Thus, finding the $\Theta(\varepsilon)$-best policy in Π for $M_{\pi^*,\phi}$ is equivalent to identifying π^*.

Importantly, our problem class contains MDP $M_{\pi^*,\phi}$ for every possible $\pi^* \in \Pi$ and latent state mapping ϕ. We pick the number of observations large enough so that observations become uninformative and it is virtually impossible for a learner to learn ϕ. Instead it can only hope to learn π^* by identifying the bias ε in the rewards. We can show that this requires number of samples that are not much smaller than collecting $\Theta(1/\varepsilon^2 \ln(1/\delta))$ episodes with each of the $(H/d)^d$ policies in Π.

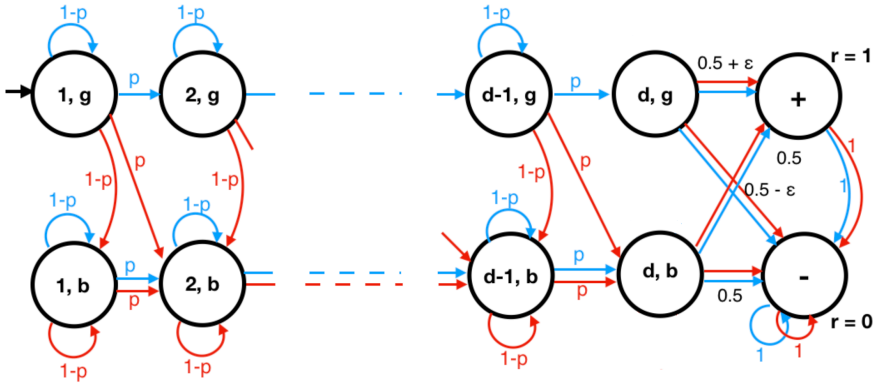

Figure 8.1: Latent state construction: contextual combination lock. As long as the agent follows actions of π^*(blue arrows), the agent remains in good states (i, g) and receives a Bernoulli$(1/2 + \varepsilon)$ reward but otherwise transits to bad states (i, b) and receives a Bernoulli$(1/2)$ reward.

While the lower bound in Theorem 41 does not have a dependence on $\log(|\Pi|)$. The simple observation that the contextual bandit problem can be seen as an instance of our setup where $d = 1$, implies that some dependence on $\log(|\Pi|)$ is necessary based on standard contextual bandit lower bounds (Lattimore and Szepesvári, 2020a). However, getting a lower bound of the form $\Omega(H^d \log(|\Pi|))$ is an interesting question, which we leave open for future work.

We presented a new analysis of reinforcement learning with rich observations in the agnostic setting, under the low rank MDP assumption. We gave both a non-adaptive and an adaptive algorithm for learning a quasi-optimal policy in this scenario, which we showed to benefit from guarantees that are only polynomial in the horizon and the number of actions, and only logarithmic in the size of the policy class considered. While our bound is exponential in the MDP rank, we give nearly matching lower bounds proving that that dependency is unavoidable. The agnostic setting is a more realistic setting that has received less attention in the literature. We view this work as initiating the study of this general setting under workable assumptions and believe that many other algorithmic and theoretical

aspects of such scenarios need to be studied further.

8.4 Detailed proofs

8.4.1 Cayley-Hamilton theorems

The following result holds for any matrix A with rank d.

Lemma 59 (Cayley-Hamilton Theorem for rank d matrices (Segercrantz, 1992))**.** *Let $A \in \mathbb{C}^{N\times N}$ be a matrix with rank at most d, where $d \leq N$, and let $\lambda = (\lambda_1, \ldots, \lambda_d) \in \mathbb{C}^d$ denote the set of eigenvalues of A. Then, A satisfies the relation*

$$A^{d+1} = \sum_{k=1}^{d} (-1)^{k+1} \alpha_k(\lambda) A^{d+1-k},$$

where the coefficient $\alpha_k(\lambda)$ are given by the sum of degree k monomials:

$$\alpha_k(\lambda) = \sum_{x\in\{0,1\}^d \ s.t. \ \|x\|_1 = k} \lambda_1^{x_1} \lambda_2^{x_2} \ldots \lambda_d^{x_d}.$$

The proof of the above follows from the characteristic polynomial for rank d matrices, which allows us to express $d+1$-th power for any matrix A in terms of the lower powers.

We will soon provide an extension of the above result which allows us to express the n-th power of the matrix A in terms of the lower powers. Before doing so, we need to define some additional notation.

Coefficients $\alpha_{m,k}$

For any $m \geq 0$ and $k \geq 0$, we first define the coefficients $\alpha_{m,k}$.

Definition 20. *For any $k \geq 0$ and $\lambda = (\lambda_1, \ldots, \lambda_d) \in \mathbb{C}^d$, define $\alpha_{m,k}(\lambda)$ to denote*

the quantity

$$\alpha_{m,k}(\lambda) := \sum_{y\in\{0,\ldots,m\}^d} \mathbb{1}\Big\{\sum_{j=1}^{d} \mathbb{1}\{y_j > 0\} = k \text{ and } \sum_{j=1}^{d} y_j = m\Big\} \prod_{j=1}^{d} \lambda_j^{y_j}. \tag{8.7}$$

whenever $m \geq k$ *and* $\alpha_{m,k} = 0$ *when* $m \leq k$ *or* $k > d$. *Further, for the ease of notation, for any* $k \in [d]$, *we define* $\alpha_k(\lambda)$ *to denote the quantity* $\alpha_{k,k}(\lambda)$.

The following lemma provides a useful technical relation between the coefficients $\alpha_{m,k}$ defined above.

Lemma 60. *For any* $m \geq 0$, $k \in [d]$ *and* $\lambda \in \mathbb{C}^d$, *the quantities* $(\alpha_{m,k})_{k\in[d],m\geq 0}$ *given in Definition 20 satisfy*

$$\sum_{j=1}^{m\wedge d} \alpha_{m,j}(\lambda) \cdot \alpha_{k,k}(\lambda) = \sum_{j'=k+1}^{(m+k)\wedge d} \binom{j'}{k} \alpha_{m+k,j'}(\lambda).$$

Proof. For the sake of the proof, we will be interpreting $\alpha_{m,j}(\lambda)$ and $\alpha_{k,k}(\lambda)$ as symmetric polynomials with λ as the formal variables. The value of these quantities can be computed by plugging in the value of $\lambda_1, \ldots, \lambda_d$ for λ.

Thus, $\alpha_{m,j}$ denotes a symmetric sum of monomials, where each monomial term has j variables with sum of all the powers in that monomial being m. Similarly, $\alpha_{k,k}$ denotes a symmetric sum of monomials, where each monomial term has k variables each with the power of 1. Subsequently, when we take the product $\alpha_{m,j} \cdot \alpha_{k,k}$, we will get monomial terms, where in each term the sum of all the powers is $m + k$, but the total number of distinct variables can range from $k + 1$ to $\min\{j + k, d\}$. Since, the polynomials $\alpha_{m,j}$ and $\alpha_{k,k}$ are symmetric in λ, the resultant polynomial that we will get after taking their product will also be symmetric. Furthermore, each of the monomial terms with j' distinct variables can be generated through $\binom{j'}{k}$ different splits with k variables that go into $\alpha_{k,k}(\lambda)$ and the rest $j' - k$ variables

that go into $\alpha_{m,j'-k}(\lambda)$. Hence, the coefficient of $\alpha_{m+k,j'}$ would be exactly $\binom{j'}{k}$. We formalize this in the following:

$$
\begin{aligned}
&\sum_{j=1}^{m\wedge d} \alpha_{m,j}(\lambda)\cdot\alpha_{k,k}(\lambda)\\
&=\sum_{j=1}^{m\wedge d}\Bigg(\sum_{y\geq 0}\mathbb{1}\Big\{\sum_{i=1}^{d}\mathbb{1}\{y_i>0\}=j \text{ and } \sum_{i=1}^{d} y_i=m\Big\}\prod_{i=1}^{d}\lambda_i^{y_i}\ \times\\
&\qquad\qquad\sum_{y'\geq 0}\mathbb{1}\Big\{\sum_{i=1}^{d}\mathbb{1}\{y'_i>0\}=k \text{ and } \sum_{i=1}^{d} y'_i=k\Big\}\prod_{i=1}^{d}\lambda_i^{y'_i}\Bigg)\\
&=\sum_{j=1}^{m\wedge d}\sum_{y,y'\geq 0}\mathbb{1}\Big\{\sum_{i=1}^{d}\mathbb{1}\{y_i>0\}=j\wedge\sum_{i=1}^{d}\mathbb{1}\{y'_i>0\}=k\wedge\sum_{i=1}^{d} y_i=m\wedge\sum_{i=1}^{d} y'_i=k\Big\}\prod_{i=1}^{d}\lambda_i^{y_i+y'_i}\\
&=\sum_{j'=k+1}^{(m+k)\wedge d}\binom{j'}{k}\sum_{y,y'\geq 0}\mathbb{1}\Big\{\sum_{i=1}^{d}\mathbb{1}\{y_i+y'_i>0\}=j' \text{ and } \sum_{i=1}^{d} y_i+y'_i=m+k\Big\}\prod_{i=1}^{d}\lambda_i^{y_i+y'_i}\\
&=\sum_{j'=k+1}^{(m+k)\wedge d}\binom{j'}{k}\sum_{y''\geq 0}\mathbb{1}\Big\{\sum_{i=1}^{d}\mathbb{1}\{y''_i>0\}=j' \text{ and } \sum_{i=1}^{d} y''_i=m+k\Big\}\prod_{i=1}^{d}\lambda_i^{y''_i}\\
&=\sum_{j'=k+1}^{(m+k)\wedge d}\binom{j'}{k}\cdot\alpha_{m+k,j'},
\end{aligned}
$$

where $y''_i := y_i + y'_i$ and the third equality in the above follows by rearranging the terms while satisfying the constraints inside the indicator. □

We next provide a bound on the value of $\alpha_{m,k}$ as a function of m and k.

Lemma 61. *For any $d \geq 1$, $m \geq 0$, $k \leq \min\{d, m\}$ and $\lambda \in \mathbb{C}^d$, that satisfies $|\lambda_j| \leq 1$ for all $j \in [d]$, the quantities $\alpha_{m,k}(\lambda)$ given in Definition 20 satisfy the bound*

$$|\alpha_{m,k}(\lambda)| \leq \Big(\frac{4e\max\{m,d\}}{d}\Big)^d.$$

Furthermore, for $k = m \leq d$, we have that $\alpha_k(\lambda) = \alpha_{k,k}(\lambda) \leq 4^d$.

Proof. Starting from the definition of $\alpha_{m,k}(\lambda)$, we note that

$$\begin{aligned}
|\alpha_{m,k}(\lambda)| &= \Big| \sum_{y\in\{0,\ldots,m\}^d} \mathbb{1}\Big\{\sum_{j=1}^d \mathbb{1}\{y_j>0\}=k \text{ and } \sum_{j=1}^d y_j = m\Big\} \prod_{j=1}^d \lambda_j^{y_j}\Big| \\
&\le \sum_{y\in\{0,\ldots,m\}^d} \mathbb{1}\Big\{\sum_{j=1}^d \mathbb{1}\{y_j>0\}=k \text{ and } \sum_{j=1}^d y_j = m\Big\} \Big|\prod_{j=1}^d \lambda_j^{y_j}\Big| \\
&= \sum_{y\in\{0,\ldots,m\}^d} \mathbb{1}\Big\{\sum_{j=1}^d \mathbb{1}\{y_j>0\}=k \text{ and } \sum_{j=1}^d y_j = m\Big\} \prod_{j=1}^d |\lambda_j^{y_j}| \\
&\le \sum_{y\in\{0,\ldots,m\}^d} \mathbb{1}\Big\{\sum_{j=1}^d \mathbb{1}\{y_j>0\}=k \text{ and } \sum_{j=1}^d y_j = m\Big\},
\end{aligned}$$

where the inequality in the second line follows from an application of Triangle inequality. The last line holds because $|\lambda_j| \le 1$, and thus $|\prod \lambda_j^{y_j}| \le 1$ for any y. We note that the right hand side in the above expression denotes the number of ways of distributing m balls into d bins such that exactly k of them are non-empty. If $m = k = 1$, we get that $|\alpha_{m,k}(\lambda)| \le 1$. Otherwise, a simple counting argument implies that

$$|\alpha_{m,k}(\lambda)| \le \binom{d}{k}\binom{m-1}{k-1} \le 2^d \cdot \binom{m-1}{k-1}.$$

When $m \le d$ or $k = 1$, we can simply upper bound the above as

$$|\alpha_{m,k}(\lambda)| \le 2^d \cdot 2^m \le 4^d.$$

Next, when $m > d$ and $k \ge 2$, using the fact that $\binom{N}{n} \le (eN/n)^n$ for any $0 < n \le N$, we get that

$$\begin{aligned}
|\alpha_{m,k}(\lambda)| &\le 2^d \cdot \left(\frac{e(m-1)}{(k-1)}\right)^k \\
&\le 2^d \cdot \left(\frac{2em}{k}\right)^k \\
&\le 2^d \cdot \left(\frac{2em}{d}\right)^d,
\end{aligned}$$

where the inequality in the second line above holds because $(m-1)/(k-1) \leq 2m/k$ for $k \geq 2$, and the inequality in the last line holds because the function $(x/y)^y$ is an increasing function of y when $x \geq ey$.

Considering the above two bounds together implies that:

$$|\alpha_{m,k}(\lambda)| \leq \left(\frac{4e \max\{m,d\}}{d}\right)^d.$$

□

Coefficients $\beta_{m,k}$

We next define the coefficients $\beta_{m,k}$ which will be useful in our upper bound analysis.

Definition 21. *For any $d \geq 1$, $\lambda \in \mathbb{C}^d$ and $m \geq 0$, define the vector $\beta_m(\lambda) \in \mathbb{C}^d$ using the following recursion:*

(a) $\beta_0(\lambda) := (\alpha_1(\lambda), \ldots, \alpha_d(\lambda))^\top$, and,

(b) For $m \geq 1$, define $\beta_m(\lambda) := (\beta_{m,1}(\lambda), \ldots, \beta_{m,d}(\lambda))^\top$ as

$$\beta_{m,k}(\lambda) = \begin{cases} \beta_{m-1,1}(\lambda) \cdot \alpha_k(\lambda) - \beta_{m-1,k+1}(\lambda) & \text{for } 1 \leq k \leq d-1 \\ \beta_{m-1,d}(\lambda) \cdot \alpha_d(\lambda) & \text{for } k = d \end{cases},$$

where $\alpha_k(\lambda)$ is as defined in (8.7) , and $\beta_{0,k}$ denotes the k-th coordinate of the vector β_0.

The next technical lemma provides a relation between the β and α values defined above.

Lemma 62. *For any $m \geq 0$ and $k \in [d]$,*

$$\beta_{m,k}(\lambda) = \sum_{j=k}^{(m+k)\wedge d} \binom{j-1}{k-1} \alpha_{m+k,j}(\lambda). \tag{8.8}$$

Proof. We prove the desired relation via induction over m. For the base case, when $m = 0$, from the definition of $\beta_{0,k}$, we note that

$$\beta_{0,k} = \alpha_{k,k}(\lambda) = \sum_{j=k}^{k} \binom{k-1}{k-1} \alpha_{k,j}(\lambda).$$

Now, we proceed to the induction step. Assume that the relation (8.8) holds for all $m' < m$. Thus, for any $k \in [d]$, from the definition of $\beta_{m,k}(\lambda)$, we have that

$$\begin{aligned}
\beta_{m,k}(\lambda) &= \beta_{m-1,1}(\lambda) \cdot \beta_{0,k}(\lambda) - \beta_{m-1,k+1}(\lambda) \\
&= \left(\sum_{j=1}^{m\wedge d} \alpha_{m,j}(\lambda)\right) \cdot \alpha_{k,k}(\lambda) - \sum_{j=k+1}^{(m+k)\wedge d} \binom{j-1}{k} \cdot \alpha_{m+k,j}(\lambda),
\end{aligned}$$

where the equality in the second line follows from using the relation (8.8) for time step $m-1$. Using the identity in Lemma 60 in the above, we get that

$$\begin{aligned}
\beta_{m,k}(\lambda) &= \sum_{j=k}^{(m+k)\wedge d} \binom{j}{k} \cdot \alpha_{m+k,j}(\lambda) - \sum_{j=k+1}^{(m+k)\wedge d} \binom{j-1}{k} \cdot \alpha_{m+k,j}(\lambda) \\
&= \sum_{j=k}^{(m+k)\wedge d} \binom{j-1}{k-1} \cdot \alpha_{m+k,j}(\lambda),
\end{aligned}$$

where the last line uses the relation $\binom{j}{k} = \binom{j-1}{k-1} + \binom{j-1}{k}$. This completes the induction step. Thus, proving that the relation (8.8) holds for all $m \geq 0$ and $k \in [d]$. $\square$

We next provide a bound on the value of the coefficients $\beta_{m,k}$ as a function of m and k.

Lemma 63. *For any $d \geq 1$, $m \geq 0$, $k \leq d$ and $\lambda \in \mathbb{C}^d$, such that $|\lambda_j| \leq 1$ for all $j \in [d]$, the quantities $\beta_{m,k}(\lambda)$ defined in Definition 21 satisfy the bound*

$$|\beta_{m,k}(\lambda)| \leq \Big(\frac{8e\max\{m+k,d\}}{d}\Big)^d.$$

Proof. As a consequence of Lemma 62, we have that for any $m \geq 0$ and $k \in [d]$,

$$\beta_{m,k}(\lambda) = \sum_{j=k}^{(m+k)\wedge d} \binom{j-1}{k-1} \cdot \alpha_{m+k,j}(\lambda).$$

Thus, using Triangle inequality, we have that

$$\begin{aligned}|\beta_{m,k}| &= \Big|\sum_{j=k}^{(m+k)\wedge d} \binom{j-1}{k-1} \cdot \alpha_{m+k,j}(\lambda)\Big| \\ &\leq \sum_{j=k}^{(m+k)\wedge d} \binom{j-1}{k-1} \cdot |\alpha_{m+k,j}(\lambda)|.\end{aligned}$$

Plugging in the bound on $|\alpha_{m+k,j}(\lambda)|$ from Lemma 61 in the above, we get that

$$\begin{aligned}|\beta_{m,k}| &\leq \sum_{j=k}^{d} \binom{j-1}{k-1} \cdot \Big(\frac{4e\max\{m+k,d\}}{d}\Big)^d \\ &\overset{(i)}{\leq} \binom{d}{k} \cdot \Big(\frac{4e\max\{m+k,d\}}{d}\Big)^d \\ &\overset{(ii)}{\leq} \Big(\frac{8e\max\{m+k,d\}}{d}\Big)^d,\end{aligned}$$

where the inequality in (i) is given by the fact that any N and n, we have $\sum_{j=n}^{N} \binom{j}{n} = \binom{N+1}{n+1}$, and the inequality in (ii) holds because for any $k \leq d$, $\binom{d}{k} \leq 2^d$. □

Extension of the Cayley-Hamilton theorem

The following result is an extension of the Cayley-Hamilton theorem (Lemma 59) for rank d matrices, and relies on the coefficients $\beta_{m,k}$ defined above.

Lemma 64 (Cayley-Hamilton Theorem extension)**.** *Let $A \in \mathbb{C}^{N\times N}$ be a matrix with rank at most d, where $d \leq N$, and let $\lambda = (\lambda_1, \ldots, \lambda_d) \in \mathbb{C}^d$ denote the set of eigenvalues of A. Then, for any $m \geq 0$,*

$$A^{d+m+1} = \sum_{k=1}^{d} (-1)^{k+1} \beta_{m,k}(\lambda) A^{d+1-k} \tag{8.9}$$

where the coefficients vector $\beta_m(\lambda) := (\beta_{m,1}(\lambda), \ldots, \beta_{m,k}(\lambda))$ are given in Definition 21.

Proof. We give a proof by induction over m. For the base case, when $m = 0$, Lemma 59 implies that

$$A^{d+1} = \sum_{k=1}^{d} (-1)^{k+1} \alpha_k(\lambda) A^{d+1-k} = \sum_{k=1}^{d} (-1)^{k+1} \beta_{0,k}(\lambda) A^{d+1-k}, \tag{8.10}$$

where the second equality follows form the definition of the vector $\beta_0(\lambda)$. We next prove the induction step.

Assume that the relation (8.9) holds for all $m' < m$. We note that

$$\begin{aligned}
A^{d+1+m} &= AA^{d+1+(m-1)} \\
&\overset{(i)}{=} A\Big(\sum_{k=1}^{d} (-1)^{k+1} \beta_{m-1,k}(\lambda) \cdot A^{d+1-k}\Big) \\
&= \beta_{m-1,1}(\lambda) A^{d+1} + \sum_{k=2}^{n} (-1)^{k+1} \beta_{m-1,k}(\lambda) \cdot A^{d+2-k} \\
&= \beta_{m-1,1}(\lambda) A^{d+1} + \sum_{k=1}^{n-1} (-1)^{k} \beta_{m-1,k+1}(\lambda) \cdot A^{d+1-k}.
\end{aligned}$$

where the equality in (i) following from using the relation (8.9) for time step $m-1$. Plugging in the expansion for A^{d+1} from (8.10) in the above, we get that

$$A^{d+1+m} = \beta_{m-1,1}(\lambda)\Big(\sum_{k=1}^{d} (-1)^{k+1} \beta_{0,k}(\lambda) \cdot A^{d+1-k}\Big) + \sum_{k=1}^{d-1} (-1)^{k} \beta_{m-1,k+1}(\lambda) \cdot A^{d+1-k}$$

$$= \sum_{k=1}^{d} (-1)^{k+1} (\beta_{m-1,1}(\lambda) \cdot \beta_{0,k}(\lambda) - \beta_{m-1,k+1}(\lambda)) A^{d+1-k}. \tag{8.11}$$

where in the second line, we defined $\beta_{m-1,d+1} = 0$. We next note that for any $k \in [d]$,

$$\begin{aligned} \beta_{m-1,1}(\lambda) \cdot \beta_{0,k}(\lambda) - \beta_{m-1,k+1}(\lambda) &= \beta_{m-1,1}(\lambda) \cdot \alpha_k(\lambda) - \beta_{m-1,k+1}(\lambda) \\ &= \beta_{m,k}(\lambda), \end{aligned}$$

where the second line above follows from the definition of $\beta_{m,k}$. Using this relation in (8.10), we get that

$$A^{d+1+m} = \sum_{k=1}^{d} (-1)^{k+1} \beta_{m,k}(\lambda) A^{d+1-k},$$

hence completing the induction step. Thus, the relation (8.9) holds for all $m \geq 0$. □

8.4.2 Proofs for Section 8.2

Proof of Lemma 56

Lemma 56 (Autoregression on expected rewards)**.** *Let π be any policy for which the transition matrix T^π has rank at most d. Then, for any time step $h \geq d+1$, the expected reward for policy π at time step h, denoted by R_h^π, satisfies the autoregression*

$$R_h^\pi = \sum_{k=1}^{d} (-1)^{k+1} \alpha_k(\lambda^\pi) R_{h-k}^\pi, \tag{8.6}$$

where $\lambda^\pi \in \mathbb{C}^d$ denotes the set of eigenvalues of the matrix T^π, and $\alpha_k(\lambda^\pi)$ is as defined in (8.3).

Proof. For any time step $h \geq 1$, let μ_h^π denote the distribution over the observation space $\mathcal{X}$ at time step h when starting from the initial distribution μ_0 and taking actions according to the policy π. Using the definition of the transition matrix T^π, we note that

$$\mu_h^\pi = T^\pi \mu_{h-1}^\pi, \tag{8.12}$$

where μ_0^π is defined as μ_0. Further, let $\nu^\pi \in \mathbb{R}^{\mathcal{X}}$ denotes the vector of expected rewards under policy π on the observation space, i.e., for any observation $x \in \mathcal{X}$,

$$\nu^\pi(x) := \mathbb{E}_{a \sim \pi(x)}[r(s,a)].$$

Thus, for any $h \leq H$, the expected reward R_h^π is given by the expression

$$R_h^\pi = \langle \nu^\pi, \mu_h^\pi \rangle = \langle \nu^\pi, (T^\pi)^{d+1} \mu_{h-d-1}^\pi \rangle, \tag{8.13}$$

where the second equality follows from recursively using the relation (8.12). Using the Cayley-Hamilton theorem (Lemma 59) for the matrix T^π, with rank at most d, we get that

$$(T^\pi)^{d+1} = \sum_{k=1}^{d} (-1)^{k+1} \alpha_k(\lambda) (T^\pi)^{d+1-k},$$

where $\lambda = (\lambda_1^\pi, \ldots, \lambda_d^\pi)$ denotes the set of eigenvalues of T^π. Plugging the above in relation (8.13) for $h \geq d+1$, we get that

$$\begin{aligned} R_h^\pi &= \langle \nu^\pi, \sum_{k=1}^{d} \alpha_k(\lambda) (T^\pi)^{d+1-k} \mu_{h-d-1}^\pi \rangle \\ &= \sum_{k=1}^{d} (-1)^{k+1} \alpha_k(\lambda) \langle \nu^\pi, \mu_{h-k}^\pi \rangle = \sum_{k=1}^{d} (-1)^{k+1} \alpha_k(\lambda) R_{h-k}^\pi, \end{aligned}$$

where the last equality follows from plugging back the expression for R_{h-k}^π from (8.13). □

Proof of Lemma 57

The following result provides an upper bound on the error in our estimates for the expected reward for any policy $\pi \in \Pi$.

Lemma 57 (Importance sampling)**.** *For any $\delta \in (0,1)$, with probability at least $1-\delta$, for any policy $\pi \in \Pi$ and time step $h \in [3d]$, the estimates $\widehat{R}_h^\pi$ computed using importance sampling satisfy the error bound*

$$|\widehat{R}_h^\pi - R_h^\pi| \leq \sqrt{\frac{2K^{3d}\log(6d|\Pi|/\delta)}{n}} + \frac{2K^{3d}\log(6d|\Pi|/\delta)}{n}.$$

Proof. First fix any $h \in [3d]$ and $\pi \in \Pi$. The expected policy reward estimate is given by

$$\widehat{R}_h^\pi = \frac{1}{n}\sum_{i=1}^{n} r_h^t \prod_{h' \leq h} \big(K\mathbb{1}\{\pi(x_{h'}^t) = a_{h'}^t\}\big)$$

Clearly, $\widehat{R}_h^\pi$ is an unbiased estimate of R_h^π as

$$\begin{aligned}
\mathbb{E}^{\bar{\pi}}[\widehat{R}_h^\pi] &= \frac{1}{n}\sum_{t=1}^{n} \mathbb{E}^{\bar{\pi}}\Big[r_h^t \prod_{h' \leq h} \big(K\mathbb{1}\{\pi(x_{h'}^t) = a_{h'}^t\}\big)\Big] \\
&= \frac{1}{n}\sum_{t=1}^{n} \mathbb{E}^{\bar{\pi}}\Big[r_h^t \prod_{h' \leq h} \frac{\pi(a_{h'}^t|x_{h'}^t)}{\bar{\pi}(a_{h'}^t|x_{h'}^t)}\Big] \\
&= \frac{1}{n}\sum_{t=1}^{n} \mathbb{E}^{\pi}[r_h^t] = \frac{1}{n}\sum_{t=1}^{n} R_h^\pi = R_h^\pi,
\end{aligned}$$

where $\bar{\pi}$ denotes the stochastic policy that picks actions uniformly at random and is used to draw the trajectory $(x_h^t, a_h^t, r_h^t)_{h=1}^H$ for $t \in [n]$. The equality in the second line above follows from the definition of $\bar{\pi}$ and the last line follows by a change of measure to the case where the trajectories are sampled using the policy π. We

next consider the second moment of each individual term in the estimator

$$\mathbb{E}^{\bar{\pi}}\Big[(r_h^t)^2 \prod_{h' \le h} \big(K \mathbb{1}\{\pi(x_{h'}^t) = a_{h'}^t\}\big)^2\Big] \overset{(i)}{\le} K^{2h} \prod_{h' \le h} \mathbb{P}^{\bar{\pi}}\big(\pi(x_{h'}^t) = a_{h'}^t\big)$$
$$\overset{(ii)}{=} K^{2h} \cdot \frac{1}{K^h} = K^h,$$

where the inequality (i) uses that $0 \le r_h^i \le 1$, and the inequality (ii) holds because $\bar{\pi}$ draws actions uniformly at random which implies that $\mathbb{P}^{\bar{\pi}}(a_{h'}^i = \pi(x_{h'}^i) \mid x_{h'}^i) = 1/K$. Therefore the variance for the tth sample,

$$\mathbb{V}^{\bar{\pi}}\Big[r_h^t \prod_{h' \le h} \big(K \mathbb{1}\{\pi(x_{h'}^t) = a_{h'}^t\}\big)\Big] \le K^h.$$

Since all episodes are i.i.d., an application of Bernstein's inequality implies that with probability at least $1 - \delta$

$$\begin{aligned}\left|\widehat{R}_h^\pi - R_h^\pi\right| &\le \sqrt{\frac{2\mathbb{V}^{\bar{\pi}}[K^h \mathbb{1}\{a_{1:h}^i = \pi(a^i)_{1:h}\} r_h^i] \log(2/\delta)}{n}} + \frac{4K^h}{3}\frac{\log(2/\delta)}{n} \\ &\le \sqrt{\frac{2K^h \log(2/\delta)}{n}} + \frac{2K^h \log(2/\delta)}{n}.\end{aligned}$$

Taking a union bound, we get that with probability at least $1 - \delta$, for all $h \in [3d]$ and $\pi \in \Pi$,

$$\left|\widehat{R}_h^\pi - R_h^\pi\right| \le \sqrt{\frac{2K^h \log(6d|\Pi|/\delta)}{n}} + \frac{2K^h \log(6d|\Pi|/\delta)}{n}.$$

□

Proof of Lemma 58

Before providing the proof of Lemma 58, we first introduce the matrix $P(\lambda)$ that depends on the eigenvalues $\lambda \in \mathbb{C}^d$, and establish a technical result about the eigenspectrum of $P(\lambda)$.

Definition 22. *For any $d \geq 1$, $\lambda = (\lambda_1, \ldots, \lambda_d) \in \mathbb{C}^d$, define the matrix $P(\lambda) \in \mathbb{C}^{d \times d}$ such that*

$$[P(\lambda)]_{i,k} = \begin{cases} (-1)^{k+1}\alpha_k(\lambda) & \text{when } i = 1 \text{ and } 1 \leq k \leq d \\ 1 & \text{when } 2 \leq i \leq d-1 \text{ and } k = i-1 \\ 0 & \text{otherwise} \end{cases},$$

where the value of $\alpha_k(\lambda)$ is given in Definition 20.

The following technical result considers the eigenspectrum of the matrix $P(\lambda)$.

Lemma 65. *For any $\lambda \in \mathbb{C}^d$, the eigenvalues of the matrix $P(\lambda)$ are given by $(\lambda_1, \ldots, \lambda_k)$.*

Proof. For the ease of notation, define α_k to denote $\alpha_{k,k}(\lambda)$ for $k \in [d]$. We start by computing the characteristic polynomial of the matrix $P(\lambda)$, which is given by

$$\det(zI - P(\lambda)) = \det \begin{bmatrix} (z-\alpha_1) & \alpha_2 & -\alpha_3 & \cdots & (-1)^d\alpha_d \\ -1 & z & 0 & \cdots & 0 \\ 0 & -1 & z & \cdots & 0 \\ & \vdots & & \cdots & \vdots \\ 0 & 0 & 0 & \cdots & z \end{bmatrix}.$$

Computing the determinant by expansing along the first row, we get that

$$\begin{aligned} \det(zI - P(\lambda)) &= (z-\alpha_1)z^{d-1} + \sum_{k=2}^{d}(-1)^{k+1} \cdot ((-1)^k\alpha_k) \cdot (-1)^{k-1} \cdot z^{d-k} \\ &= z^d - \alpha_1 z^{d-1} + \alpha_k z^{d-2} + \ldots + (-1)^d\alpha_d. \end{aligned}$$

Using the definition of α_k from Definition 20, we can factorize the above polynomial

as

$$\det(zI - P(\lambda)) = \prod_{k=1}^{d}(z - \lambda_k).$$

Since, the eigenvalues of any matrix are given by the roots of its characteristic polynomial, the above computation shows that the eigenvalues of the matrix $P(\lambda)$ are given by $(\lambda_1, \ldots, \lambda_d)$. □

The following structural lemma shows that for any autoregression with coefficients $(\alpha_1(\lambda), \ldots, \alpha_k(\lambda))$, the $(m+d)$-th term can be expressed using the m-th power of the matrix $P(\lambda)$. Recall that the expected rewards for any policy satisfy such an autoregression whenever the underlying MDP has low rank (see Lemma 56).

Lemma 66. *Let $\lambda \in \mathbb{C}^d$ and $R_1, \ldots, R_d \in \mathbb{R}$. For any $h \geq d+1$, let R_h be given by*

$$R_h = \sum_{k=1}^{d}(-1)^{k+1}\alpha_k(\lambda)R_{h-k}, \tag{8.14}$$

where the coefficient $\alpha_k(\lambda)$ are defined in Definition 20. Then, for any $m \geq 0$,

$$R_{m+d} = \langle U, P(\lambda)^m V\rangle \tag{8.15}$$

where the vector $U := (1, 0, \ldots, 0)^\top \in \mathbb{R}^d$, the vector $V := (R_d, R_{d-1}, \ldots, R_1)^\top \in \mathbb{R}^d$ and the matrix $P(\lambda) \in \mathbb{C}^d$ is defined in Definition 21.

Proof. For any $h \geq d$, define the vector $U_h \in \mathbb{R}^d$ such that

$$U_h := (R_h, R_{h-1}, \ldots, R_{h-d+1})^\top.$$

We first note that for any $j \in [d]$ such that $j \geq 2$,

$$U_h[j] = R_{h-(j)-1} = U_{h-1}[j-1].$$

Further, using the recurrence relation (8.14), we get that for any $h \geq d+1$,

$$U_h[1] = R_h = \sum_{k=1}^{d} (-1)^{k+1} \alpha_k(\lambda) R_{h-k} = \sum_{k=1}^{d} (-1)^{k+1} \alpha_k(\lambda) U_{h-1}[k].$$

The above two relation imply that for any $h \geq d+1$,

$$U_h = P(\lambda) U_{h-1}, \tag{8.16}$$

where the matrix $P(\lambda)$ is defined such that

$$[P(\lambda)]_{j,k} = \begin{cases} (-1)^{k+1}\alpha_k & \text{when } j=1 \text{ and } 1 \leq k \leq d \\ 1 & \text{when } 2 \leq j \leq d \text{ and } k = j+1 \\ 0 & \text{otherwise} \end{cases}.$$

Setting $h = d+m$ in relation (8.16), we get that for any m

$$U_{m+d} = P(\lambda) U_{m-1+d} = \cdots = P(\lambda)^m U_d.$$

Finally, we note that for any $m \geq 0$,

$$R_{m+d} = \langle V, U_{m+d} \rangle = \langle V, P(\lambda)^m U_d \rangle,$$

where the vector $V = (1, 0, \ldots, 0) \in \mathbb{R}^d$ and the vector $U_d = (R_d, \ldots, R_1)^\top \in \mathbb{R}^d$. □

We are finally ready to prove Lemma 58. The following proof is based on the extension of the Cayley-Hamilton theorem for rank d matrices (see Lemma 64) and uses Lemma 66.

Lemma 58 (Error propagation bound)**.** *Let $\lambda, \widehat{\lambda} \in \mathbb{C}^d$ be such that $\max\{|\lambda_1|, |\widehat{\lambda}_1|\} \leq 1$. Further, with the initial values $R_1, \ldots, R_d$ and $\widetilde{R}_1, \ldots, \widetilde{R}_d$, let the sequence $\{R_h\}$ and $\{\widetilde{R}_h\}$ be given by*

$$R_h = \sum_{k=1}^{d} (-1)^{k+1} \alpha_k(\lambda) R_{h-k} \qquad \textit{and} \qquad \widetilde{R}_h = \sum_{k=1}^{d} (-1)^{k+1} \alpha_k(\widehat{\lambda}) \widetilde{R}_{h-k},$$

where the coefficients $\alpha_k(\lambda)$ and $\alpha_k(\widehat{\lambda})$ are define as in (8.3). Then, for all $h \geq 3d+1$,

$$|\widetilde{R}_h - R_h| \leq 2d \cdot \left(\frac{16eh}{d}\right)^{2d} \cdot \max_{h' \leq 3d} |R_{h'} - \widetilde{R}_{h'}|.$$

Proof. Using Lemma 66 for the sequences $\{R_h\}$ and $\{\widetilde{R}_h\}$ respectively, we get that for any $m \geq 0$,

$$R_{d+m} = \langle U, P(\lambda)^m V\rangle \qquad \text{and} \qquad \widetilde{R}_{d+m} = \langle \widetilde{U}, P(\widehat{\lambda})^m \widetilde{V}\rangle,$$

where the matrices $P(\lambda), P(\widehat{\lambda}) \in \mathbb{R}^{d\times d}$ are defined according to Definition 21 and the vectors $U, \widetilde{U}, V, \widetilde{V} \in \mathbb{R}^d$ are independent of λ and m. Thus, for any $m \geq 0$,

$$\begin{aligned} |R_{m+d} - \widetilde{R}_{m+d}| &= |\langle U, P(\lambda)^m V\rangle - \langle \widetilde{U}, P(\widehat{\lambda})^m V\rangle| \\ &= |\langle \bar{U}, \bar{P}^m \bar{V}\rangle|, \end{aligned} \tag{8.17}$$

where the vectors $\bar{U}, \bar{V} \in \mathbb{R}^{2d}$ and the block diagonal matrix $\bar{P} \in \mathbb{R}^{2d\times 2d}$ are defined as

$$\bar{V} := \begin{bmatrix} V \\ -\widetilde{V} \end{bmatrix}, \quad \bar{U} := \begin{bmatrix} U \\ -\widetilde{U} \end{bmatrix} \quad \text{and} \quad \bar{P} := \begin{bmatrix} P(\lambda) & 0 \\ 0 & P(\widehat{\lambda}) \end{bmatrix}.$$

An application of Lemma 65 implies that the eigenvalues of the matrix $P(\lambda)$ and the matrix $P(\widehat{\lambda})$ are given by λ and $\widehat{\lambda}$ respectively. Since the matrix $\bar{P}$ is block-diagonal, we note that the set of eigenvalues of the matrix $\bar{P}$ is given by $\bar{\lambda} = (\lambda_1, \widehat{\lambda}_1, \ldots, \lambda_d, \widehat{\lambda}_d)$. Note that the vector $\bar{\lambda}$ is not sorted except for the first two coordinates, however $|\bar{\lambda}_k| \leq 1$ for all $k \in [2d]$. Using Lemma 64 for $2d \times 2d$ matrix $\bar{P}$, we get that for any $m \geq 2d+1$,

$$\bar{P}^{2d+m+1} = \sum_{k=1}^{2d} \beta_{m,k}(\bar{\lambda}) \cdot \bar{P}^{2d+1-k}.$$

Using the above relation with (8.17) and setting $m = h - 3d - 1$, we get that for any $h \geq 3d + 1$,

$$|R_h - \widetilde{R}_h| = \left|\langle \bar{U}, \bar{P}^{h-d}\bar{V}\rangle\right| = \left|\langle \bar{U}, \sum_{k=1}^{2d} \beta_{h-3d-1,k}(\bar{\lambda}) \cdot \bar{P}^{2d+1-k}\bar{V}\rangle\right|$$
$$= \left|\sum_{k=1}^{2d} \langle \bar{U}, \beta_{h-3d-1,k}(\bar{\lambda}) \cdot \bar{P}^{2d+1-k}\bar{V}\rangle\right|.$$

Using the triangle inequality on the right-hand side in the above, we obtain:

$$\begin{aligned}
|R_h - \widetilde{R}_h| &\leq \sum_{k=1}^{2d} \left|\beta_{h-3d-1,k}(\bar{\lambda})\right| \cdot |\langle \bar{U}, \bar{P}^{2d+1-k}\bar{V}\rangle| \\
&\overset{(i)}{=} \sum_{k=1}^{2d} |\beta_{h-3d-1,k}(\bar{\lambda})| \cdot |R_{3d+1-k} - \widetilde{R}_{3d+1-k}| \\
&\overset{(ii)}{\leq} 2d \cdot \left(\frac{4e \max\{h - 3d - 1 + k, 2d\}}{d}\right)^{2d} \cdot \max_{h' \leq 3d} |R_{h'} - \widetilde{R}_{h'}| \\
&\leq 2d \cdot \left(\frac{16e \max\{h, d\}}{d}\right)^{2d} \cdot \max_{h' \leq 3d} |R_{h'} - \widetilde{R}_{h'}|, \\
&= 2d \cdot \left(\frac{16eh}{d}\right)^{2d} \cdot \max_{h' \leq 3d} |R_{h'} - \widetilde{R}_{h'}|,
\end{aligned}$$

where the equality in (i) holds due to relation (8.17) and the inequality (ii) is given by the bound on $|\beta_{h-3d-1,k}(\bar{\lambda})|$ from Lemma 63. The last line is due to the fact that $h > 3d$. □

Supporting technical results for the proof of Theorem 40

Lemma 67. *Let $\lambda \in \mathbb{C}^d$ be such that $|\lambda_k| \leq 1$ for all $k \in [d]$. Using the initial values $R_1, \ldots, R_d$, let R_h be defined as*

$$R_h := \sum_{k=1}^{d} (-1)^{k+1} \alpha_k(\lambda) R_{h-k}. \tag{8.18}$$

Further, let $\widehat{R}_1, \widehat{R}_2, \ldots, \widehat{R}_{3d}$ denote the estimates for $R_1, \ldots, R_{3d}$ respectively, such that

$$\max_{h \leq 3d} |\widehat{R}_h - R_h| \leq \eta. \tag{8.19}$$

Then,

(a) The optimization problem (8.4) in Algorithm 6 has a solution $(\widehat{\lambda}, \widehat{\Delta})$ such that

$$|\widehat{\Delta}| \leq 2d \cdot 4^d \cdot \eta.$$

(b) Further, let $\widetilde{R}_h$ be predictions according to Line 5 in Algorithm 6 using the solution $\widehat{\lambda}$. Then,

$$\max_{h \leq 3d} |\widetilde{R}_h - R_h| \leq 2d \cdot (64e)^d \cdot \eta.$$

Proof. We prove the two parts separately below.

(a) We first show that the optimization problem in (8.4) is feasible. Specifically, we show that there exists a tuple (λ', Δ') that satisfies all the constraints in (8.4) such that $|\Delta'| \leq 2d4^d\eta$. Set $\lambda' = \lambda$. We note that $|\lambda'_1| = 1$ and $|\lambda'_k| \leq 1$ for all $k \leq d$ and thus all the constraints in (8.4) are satisfied. Furthermore, for any $h \leq 3d$,

$$\begin{aligned}
|\sum_{k=1}^{d}(-1)^{k+1}\alpha_k(\lambda)\widehat{R}_{h-k} - \widehat{R}_h| &\overset{(i)}{=} |\sum_{k=1}^{d}(-1)^{k+1}\alpha_k(\lambda)(\widehat{R}_{h-k} - R_{h-k}) - (\widehat{R}_h - R_h)| \\
&\overset{(ii)}{\leq} \sum_{k=1}^{d}|\alpha_k(\lambda)| \cdot |\widehat{R}_{h-k} - R_{h-k}| + |\widehat{R}_h - R_h| \\
&\overset{(iii)}{\leq} d \cdot 4^d \cdot \eta + \eta \\
&\leq 2d \cdot 4^d \cdot \eta \qquad (8.20)
\end{aligned}$$

where the equality (i) follows from the relation (8.18) and the inequality (ii) follows from Triangle inequality. The inequality (iii) follows by plugging in the bound from Lemma 61 for $|\alpha_k(\lambda)|$ and using the bound in (8.19). The above implies that $|\Delta'| \leq 2d4^d\eta$.

Thus, any solution $(\widehat{\lambda}, \widehat{\Delta})$ of the optimization problem in (8.4) must satisfy

$$|\widehat{\Delta}| \leq 2d \cdot 4^d \cdot \eta. \tag{8.21}$$

(b) Let us first define some additional notation. For any $m \leq 2d$, define Δ_m as the error for mth expected reward when plugging in the minimizer solution $\widehat{\lambda}$, i.e.,

$$\widehat{\Delta}_m := \sum_{k=1}^{d} (-1)^{k+1} \alpha_k(\widehat{\lambda}) \cdot \widehat{R}_{d+m-k} - \widehat{R}_{d+m}. \tag{8.22}$$

Further, define Z_m as the error in our prediction for the expected reward at $(m+d)$th time step, i.e.

$$Z_m := \widetilde{R}_{m+d} - \widehat{R}_{m+d}. \tag{8.23}$$

In the following, we will show that for all $m \geq 1$,

$$Z_m = \widehat{\Delta}_m + \sum_{i=1}^{m-1} \beta_{i-1,1}(\widehat{\lambda}) \cdot \widehat{\Delta}_{m-i}, \tag{8.24}$$

where the coefficients $\beta_{i-1,1}$ are given in Definition 21.

Our desired bound follows as a direct consequence of (8.24). For any $1 \leq m \leq 2d$,

$$\begin{aligned}
|\widetilde{R}_{m+d} - R_{m+d}| &\leq |\widetilde{R}_{m+d} - \widehat{R}_{m+d}| + |\widehat{R}_{m+d} - R_{m+d}| \\
&\overset{(i)}{\leq} |\widehat{\Delta}_m + \sum_{i=1}^{m-1} \beta_{i-1,1}(\widehat{\lambda}) \cdot \widehat{\Delta}_{m-i}| + \eta \\
&\overset{(ii)}{\leq} |\widehat{\Delta}_m| + \sum_{i=1}^{m-1} |\beta_{i-1,1}(\widehat{\lambda})||\widehat{\Delta}_{m-i}| + \eta \\
&\overset{(iii)}{\leq} |\widehat{\Delta}| + \sum_{i=1}^{m-1} |\beta_{i-1,1}(\widehat{\lambda})||\widehat{\Delta}| + \eta \\
&\overset{(iv)}{\leq} 2d \cdot 4^d \cdot \Big(\frac{8e \max\{m,d\}}{d}\Big)^d \cdot \eta \\
&\leq 2d \cdot (64e)^d \cdot \eta,
\end{aligned}$$

where the inequality (i) follows from the definition of Z_m in (8.23) and by using the bound in (8.19), and the inequality (ii) above is due to Triangle inequality. The inequality (iii) above follows by using the fact that $|\widehat{\Delta}_m| \leq |\widehat{\Delta}|$ for all $m \leq 2d$. Finally, the inequality (iv) follows by plugging in the bound in (8.21) and by using Lemma 63 to bound $|\beta_{i-1,1}(\widehat{\lambda})|$.

Proof of relation (8.24). We prove this by induction over m. For the base case, when $m = 1$,

$$Z_{d+1} = \widetilde{R}_{d+1} - \widehat{R}_{d+1} \overset{(i)}{=} \sum_{k=1}^{d} (-1)^{k+1} \alpha_k(\widehat{\lambda}) \cdot \widehat{R}_k - \widehat{R}_{d+1} \overset{(ii)}{=} \widehat{\Delta}_1,$$

where the equality in (i) follows from the definition of $\widetilde{R}_{d+1}$ holds due to (8.18) and (ii) follows from the definition of $\widehat{\Delta}_1$.

We next show the induction step. For any $m \geq 2$, suppose that the relation (8.24) holds for all times $m' < m$. We note that

$$\begin{aligned}
Z_{d+m} &= \widetilde{R}_{d+m} - \widehat{R}_{d+m} \\
&\overset{(i)}{=} \sum_{k=1}^{d} (-1)^{k+1} \alpha_k(\widehat{\lambda}) \cdot \widetilde{R}_{d+m-k} - \widehat{R}_{d+m} \\
&= \sum_{k=1}^{d} (-1)^{k+1} \alpha_k(\widehat{\lambda}) \cdot \widetilde{R}_{d+m-k} - \sum_{k=1}^{d} (-1)^{k+1} \alpha_k(\widehat{\lambda}) \cdot \widehat{R}_{d+m-k} \\
&\qquad + \sum_{k=1}^{d} (-1)^{k+1} \alpha_k(\widehat{\lambda}) \cdot \widehat{R}_{d+m-k} - \widehat{R}_{d+m} \\
&\overset{(ii)}{=} \sum_{k=1}^{d} (-1)^{k+1} \alpha_k(\widehat{\lambda}) \cdot \widetilde{R}_{d+m-k} - \sum_{k=1}^{d} (-1)^{k+1} \alpha_k(\widehat{\lambda}) \cdot \widehat{R}_{d+m-k} + \widehat{\Delta}_m \\
&= \sum_{k=1}^{d} (-1)^{k+1} \alpha_k(\widehat{\lambda}) \cdot \left(\widetilde{R}_{d+m-k} - \widehat{R}_{d+m-k} \right) + \widehat{\Delta}_m \\
&\overset{(iii)}{=} \sum_{k=1}^{d} (-1)^{k+1} \beta_{0,k}(\widehat{\lambda}) \cdot \left(\widetilde{R}_{d+m-k} - \widehat{R}_{d+m-k} \right) + \widehat{\Delta}_m
\end{aligned}$$

$$\overset{(iv)}{=} \sum_{k=1}^{d} (-1)^{k+1} \beta_{0,k} \cdot Z_{m-k} + \widehat{\Delta}_m.$$

where (i) follows from the definition of $\widetilde{R}_{d+m}$ (see (8.5)) and (ii) follows by the definition of $\widehat{\Delta}_m$ in (8.22). The equality (iii) above is due to the fact that $\beta_{0,k}(\widehat{\lambda}) = \alpha_k(\widehat{\lambda})$ (by definition) and finally, the equality (iv) follows from the definition of Z_{m-k} in (8.23). Plugging in the induction hypothesis for Z_{m-k} in the above, we get that

$$\begin{aligned} Z_{d+m} &= \sum_{k=1}^{d} (-1)^{k+1} \beta_{0,k}(\widehat{\lambda}) \cdot \Big(\widehat{\Delta}_{m-k} + \sum_{j=1}^{m-k-1} \beta_{j-1,1}(\widehat{\lambda}) \cdot \widehat{\Delta}_{m-k-j} \Big) + \widehat{\Delta}_m \\ &= \widehat{\Delta}_m + \sum_{i=1}^{m-1} \widehat{\Delta}_{m-i} \cdot \Big((-1)^{i+1} \beta_{0,i}(\widehat{\lambda}) + \sum_{j=1}^{i-1} (-1)^{i-j-1} \beta_{j-1,1}(\widehat{\lambda}) \cdot \beta_{0,i-j} \Big) \\ &= \widehat{\Delta}_m + \sum_{i=1}^{m-1} \beta_{i-1,1}(\widehat{\lambda}) \cdot \widehat{\Delta}_{m-i}, \end{aligned}$$

where the second line above follows by rearranging the terms and using the fact that $\beta_{0,k}(\widehat{\lambda}) = 0$ whenever $k > d$, and the equality in the last line holds by using the fact that $\beta_{0,k}(\widehat{\lambda}) \cdot \beta_{h-1,1}(\widehat{\lambda}) = \beta_{h-1,k+1}(\widehat{\lambda}) + \beta_{h,k}(\widehat{\lambda})$ for all $h, k \geq 0$ (see Definition 21). This completes the induction step, hence proving (8.24) for all $m \geq 1$. □

Proof of Theorem 40

We finally provide the proof of Theorem 40 that characterizes the performance guarantee for the policy $\widetilde{\pi}$ returned by Algorithm 5.

Proof of Theorem 40 . Starting from Lemma 57, we get that with probability at least $1 - \delta$, for every policy $\pi \in \Pi$, our estimate $\widehat{R}_h^{\pi}$ computed in Line 3 of

Algorithm 6 satisfies the error bound

$$\max_{h' \leq 3d} |\widehat{R}^{\pi}_{h'} - R^{\pi}_{h'}| \leq \min\left\{ \sqrt{\frac{8K^{3d}\log(6d|\Pi|/\delta)}{n}}, \frac{4K^{3d}\log(6d|\Pi|/\delta)}{n} \right\}. \tag{8.25}$$

Now, consider any policy $\pi \in \Pi$, and let $\widehat{\lambda}^{\pi}$, $\widehat{\Delta}^{\pi}$, $\widetilde{R}^{\pi}_{h}$ and $\widetilde{V}^{\pi}$ denote the corresponding local variables in the procedure ValEstimate when invoked in Algorithm 5 for the policy π. Further, let λ^{π} denote the eigenvalues of the transition matrix T^{π}. As a consequence of Lemma 56, the expected rewards R^{π}_{h} satisfy an autoregression where the coefficients are determined by λ^{π}. Specifically, for any $h \geq d+1$,

$$R^{\pi}_{h} = \sum_{k=1}^{d} (-1)^{k+1} \alpha_k(\lambda^{\pi}) \cdot R^{\pi}_{h-k}.$$

Furthermore, by definition (see Line 5 of Algorithm 6), the predicted rewards $\widetilde{R}^{\pi}_{h}$ also satisfy a similar autoregression where the coefficients are determined by $\widehat{\lambda}^{\pi}$, the solution of the optimization problem in (8.4) for the policy π. We have, for any $h \geq d+1$,

$$\widetilde{R}^{\pi}_{h} = \sum_{k=1}^{d} (-1)^{k+1} \alpha_k(\widehat{\lambda}^{\pi}) \cdot \widetilde{R}^{\pi}_{h-k}$$

where $\widetilde{R}_{h'} := \widehat{R}_{h'}$ for $h' \leq d$. Additionally, also note that T^{π} is a stochastic matrix and thus $|\lambda^{\pi}_{k}| \leq 1$ for all $k \in [d]$. By definition, we also have that $|\widehat{\lambda}^{\pi}_{k}| \leq 1$. Thus, using the error propagation bound in Lemma 58 for the sequences $\{R^{\pi}_{h}\}$ and $\{\widetilde{R}^{\pi}_{h}\}$ we get that for any $h \geq 3d+1$,

$$|\widetilde{R}^{\pi}_{h} - R^{\pi}_{h}| \leq 2d \cdot \left(\frac{16eh}{d}\right)^{2d} \max_{h' \leq 3d} |\widetilde{R}_{h'} - R_{h'}|.$$

The above bound implies that for any $h \geq 1$,

$$|\widetilde{R}^{\pi}_{h} - R^{\pi}_{h}| \leq 2d \cdot \left(\frac{16e(h \vee d)}{d}\right)^{2d} \max_{h' \leq 3d} |\widetilde{R}_{h'} - R_{h'}| \tag{8.26}$$

We note that an application of Lemma 67 implies that the predicted rewards $\widetilde{R}^{\pi}_{h'}$ satisfy the error bound

$$\max_{h' \leq 3d} |\widetilde{R}^{\pi}_{h'} - R^{\pi}_{h'}| \leq 2d \cdot (64e)^{d} \cdot \max_{h' \leq 3d} |\widehat{R}^{\pi}_{h'} - R^{\pi}_{h'}|$$

$$\leq 2d \cdot (64e)^d \cdot \eta,$$

where η denotes the right hand side of (8.25). Plugging the above in (8.26), we get that

$$|\widetilde{R}_h^\pi - R_h^\pi| \leq 4d^2 \cdot \Big(\frac{128e^2(h \vee d)}{d}\Big)^{2d} \cdot \eta. \tag{8.27}$$

for any $h \geq 1$. Thus, the error in the estimated value $\widetilde{V}^\pi$ for the policy π is bounded by

$$\begin{aligned}
|\widetilde{V}^\pi - V^\pi| &= |\sum_{h=1}^{H} (\widetilde{R}_h^\pi - R_h^\pi)| \\
&\leq \sum_{h=1}^{H} |\widetilde{R}_h^\pi - R_h^\pi| \\
&\leq \sum_{h=1}^{H} 4d^2 \cdot \Big(\frac{128e^2(h \vee d)}{d}\Big)^{2d} \cdot \eta \\
&\leq 4d^3 \cdot \Big(\frac{128e^2 H}{d}\Big)^{2d} \cdot \eta,
\end{aligned} \tag{8.28}$$

where the inequality in the second last line follows by using the bound in (8.27), and the inequality in the last line holds because $H \geq d$.

Since π is arbitrary in the above chain of arguments, the error bound in (8.28) holds for all policies $\pi \in \Pi$. Thus, for any $\pi \in \Pi$, the policy $\widetilde{\pi}$ returned in Line 4 of Algorithm 5 satisfies

$$\begin{aligned}
V^{\widetilde{\pi}} - V^\pi &= (\widetilde{V}^\pi - V^\pi) + (\widetilde{V}^{\widetilde{\pi}} - \widetilde{V}^\pi) + (V^{\widetilde{\pi}} - \widetilde{V}^{\widetilde{\pi}}) \\
&\geq (\widetilde{V}^\pi - V^\pi) + (V^{\widetilde{\pi}} - \widetilde{V}^{\widetilde{\pi}}) \\
&\geq -|\widetilde{V}^\pi - V^\pi| - |V^{\widetilde{\pi}} - \widetilde{V}^{\widetilde{\pi}}|,
\end{aligned}$$

where the inequality in the second line follows from the fact that $\widetilde{V}^{\widetilde{\pi}} \geq \widetilde{V}^\pi$ for every $\pi \in \Pi$ by the definition of the policy $\widetilde{\pi}$. Using the bound from (8.28) for

policies π and $\widetilde{\pi} \in \Pi$ in the above, we get that

$$\begin{aligned} V^{\widetilde{\pi}} &\geq V^{\pi} - 4d^3 \cdot \Big(\frac{128e^2 H}{d}\Big)^{2d} \cdot \eta \\ &\geq V^{\pi} - 4d^3 \cdot \Big(\frac{128e^2 H}{d}\Big)^{2d} \cdot \min\Big\{\sqrt{\frac{8K^{3d}\log(6d|\Pi|/\delta)}{n}}, \frac{4K^{3d}\log(6d|\Pi|/\delta)}{n}\Big\} \\ &\geq V^{\pi} - 4d^3 \cdot \Big(\frac{128e^2 H}{d}\Big)^{2d} \sqrt{\frac{8K^{3d}\log(6d|\Pi|/\delta)}{n}} \end{aligned}$$

where the inequality in the second line above follows by plugging in the value of η as the right hand side of (8.25), and the inequality in the last line holds due to the fact that $-\min\{a, b\} \geq -a$ for any $a, b \geq 0$.

Since the above holds for any $\pi \in \Pi$, we have that

$$V^{\widetilde{\pi}} \geq \max_{\pi \in \Pi} V^{\pi} - 4d^3 \cdot \Big(\frac{128e^2 H}{d}\Big)^{2d} \sqrt{\frac{8K^{3d}\log(6d|\Pi|/\delta)}{n}},$$

hence proving the desired statement. □

8.4.3 Proof of lower bound Theorem 41

Lower bound construction

We start by describing the lower bound construction, consisting of the policy class Π and the family $\mathscr{M}$ of Markov decision processes with rank $2d+2$. All MDPs in the family $\mathscr{M}$ have the observation space $\mathcal{X}$ of finite (but very large) size $N = |\mathcal{X}|$ and action space $\mathcal{A} = \{0, 1\}$, but have different transition dynamics.

Policy class Π. The policy class $\Pi \subset \{\mathcal{X} \mapsto \mathcal{A}\}$ consists of $K = (H/d)^d$ deterministic policies that are sufficiently distinct from each other. Specifically, for any

two distinct policies $(\pi, \pi') \in \Pi^2$,

$$\sum_{x \in \mathcal{X}} \mathbb{1}\{\pi(x) \neq \pi'(x)\} \geq \frac{N}{4}.$$

Existence of such a policy class follows from the Gilbert-Varshamov bound (Lemma 69) when $8d \log(H/d) \leq N$.

Family of MDPs $\mathscr{M}$. Each MDP $M_{\pi,\phi} \in \mathscr{M}$ is indexed by a policy $\pi \in \Pi$ (which will be optimal in that MDP) and a function $\phi \colon \mathcal{X} \mapsto \mathcal{S}$ that maps each observation in $x \in \mathcal{X}$ to one of the $2d + 2$ hidden states given by $S = \{(1, g), (1, b), \ldots, (d, g), (d, b), +, -\}$. In the following, we describe the transition dynamics and the reward function for the MDP $M_{\pi^*,\phi}$.

Transition dynamics of $M_{\pi,\phi}$. The transition dynamics of $M_{\pi,\phi}$ is governed by the mapping ϕ and the dynamics in the $2d + 2$ latent states. The dynamics in the latent states S is given by two parallel chains, depicted in Figure 8.2. Each latent state, except for the final states $+$ and $-$, have the form (i, g) or (i, b) where $i \in [d]$ denotes the index in the chain, and the notation g and b denotes good states and bad states respectively. The initial observation x_0 always corresponds to the hidden state $(1, g)$. At each time step, independent of the action taken, the chain index i increases by 1 with probability p_i (defined later) or stays the same with probability $(1 - p_i)$. As long as the agent follows actions according to π, the next latent state remains a good state (with the second component g). However, as soon as the agent takes an action that π would not have taken, the second component is set to b and then stays b forever. If the agent reaches latent state (d, g) it transitions to the latent state $+$ with probability $\frac{1}{2} + \varepsilon$ and to the latent state $-$ with probability $\frac{1}{2} - \varepsilon$. From (d, b), the agent transitions to both

the latent states $+$ or $-$ with equal probability. Finally, from the hidden state $+$, the agent transitions to $-$ in the next step with probability 1. The state $-$ always transitions back to itself independent of the action taken.

We next describe, how the above dynamics in the latent state space defines the transition dynamics for the MDP $M_{\pi,\phi}$ in the observation space. Define $\mathcal{X}_s := \{x \in \mathcal{X} \mid \phi(x) = s\}$ as the set of observations from $\mathcal{X}$ that are mapped to latent state $s \in \mathcal{S}$ by the feature mapping ϕ, and define $D_s := \text{Uniform}(\mathcal{X}_s)$ to denote the uniform distribution over the set $\mathcal{X}_s$. The initial observation x_0 is sampled independently from $\mu_0 = D_{(1,g)}$. The two parameters π and ϕ of MDP $M_{\pi,\phi}$ define the transition dynamics $T_{\pi,\phi}$ as follows:

a) For any observations $x \in \mathcal{X}_{(i,g)}$ of **good latent states**, where $i \in [d-1]$,

$$T_{\pi,\phi}(x,a) = \begin{cases} p_i D_{(i+1,g)} + (1-p_i) D_{(i,g)} & \text{if } a = \pi(x) \\ p_i D_{(i+1,b)} + (1-p_i) D_{(i,b)} & \text{else} \end{cases},$$

where the value of $p_i \in (0,1)$ is set later and $T_{\pi,\phi}(x,a)$ denotes the probability distribution over the next observation x' when taking action a at observation x.

b) For any observations $x \in \mathcal{X}_{(i,b)}$ of **bad latent states**, where $i \in [d-1]$ and all $a \in \mathcal{A}$,

$$T_{\pi,\phi}(x,a) = p_i D_{(i+1,b)} + (1-p_i) D_{(i,b)}.$$

c) For any observations $x \in \mathcal{X}_{(d,g)}$ of the **good goal state** and all $a \in \mathcal{A}$,

$$T_{\pi,\phi}(x,a) = \left(\frac{1}{2} + \varepsilon\right) D_+ + \left(\frac{1}{2} - \varepsilon\right) D_-,$$

where the bias $\varepsilon \in (0, 1/2)$ is set later.

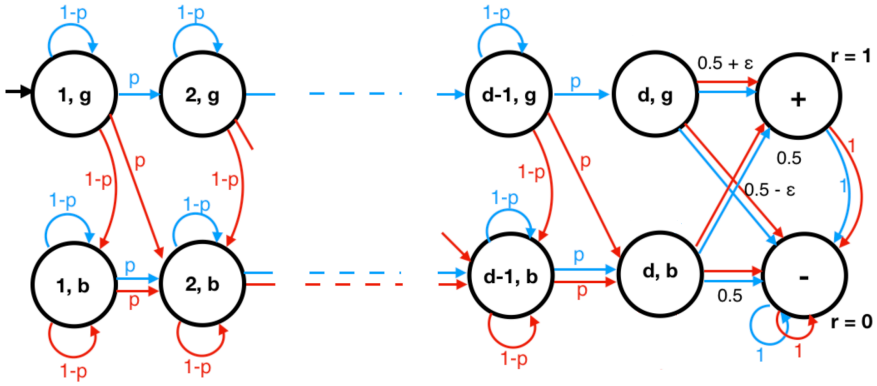

Figure 8.2: Latent state construction: contextual combination lock. As long as the agent follows actions of the policy π that characterizes the MDP $M_{\phi,\pi}$ (blue arrows), the agent remains in good states (i, g) and receives a Bernoulli$(1/2 + \varepsilon)$ reward but otherwise transits to bad states (i, b) and receives a Bernoulli$(1/2)$ reward.

d) For any observation $x \in \mathcal{X}_{(d,b)}$ of the **bad goal state**, and all $a \in \mathcal{A}$,

$$T_{\pi,\phi}(x, a) = \frac{1}{2}D_+ + \frac{1}{2}D_-.$$

e) For any observation $x \in \mathcal{X}_- \cup \mathcal{X}_+$ of **latent states** $-$ **and** $+$, and all $a \in \mathcal{A}$,

$$T_{\pi,\phi}(x, a) = D_-.$$

Reward function for $M_{\phi,\pi}$. For any observation x, the reward is 0 unless the latent state correspond to x is $+$, in which case, the reward is 1. Specifically,

$$r(x, a) = \mathbb{1}\{x \in \mathcal{X}_+\} \ .$$

Initial observation in $M_{\phi,\pi}$. The initial observation x_0 is sampled uniformly at random from $\mathcal{X}_{(1,g)}$.

Additional MDP $M_{0,\phi}$. In addition to the above defined MDPs $M_{\pi,\phi}$, we define the MDP $M_{0,\phi}$ for every ϕ in the MDP where latent states with b and g behave

exactly the same. Specifically, the transition dynamics is given by

$$T_{0,\phi}(x,a) = \begin{cases} \frac{1}{2}D_+ + \frac{1}{2}D_- & \text{if } x \in X_{(d,b)} \cup X_{(d,g)} \\ \frac{p}{2}D_{(i+1,b)} + \frac{1-p}{2}D_{(i,b)} + \frac{p}{2}D_{(i+1,g)} + \frac{1-p}{2}D_{(i,g)} & \text{if } x \in X_{(i,b)} \cup X_{(i,g)} \text{ for } i \in [d-1] \\ D_- & \text{if } x \in X_+ \cup X_- \end{cases} \cdot$$

Note that the actions taken do not affect the rewards or observations received in MDPs $M_{0,\phi}$ and thus every policy is an optimal policy.

The family of MDPs $\mathscr{M}$ is finally defined as

$$\mathscr{M} := \{M_{\pi,\phi} \mid \pi \in \Pi,\ \phi \in \mathcal{X} \mapsto \mathcal{S}\} \cup \{M_{0,\phi} \mid \phi \in \mathcal{X} \mapsto \mathcal{S}\}.$$

We note that the rank of each MDP in the class $\mathscr{M}$ is $O(d)$ as show in the following lemma.

Lemma 68 (Rank bound for MDPs in $\mathscr{M}$)**.** *Let $M_{\pi^*,\phi}$ be an MDP in $\mathscr{M}$. Let $\pi \in \Pi$ be any policy and let $T^{\pi}_{\pi^*,\phi}$ denote the induced transition matrix of the policy π in the MDP $M_{\pi^*,\phi}$. Then, the rank of the matrix $T^{\pi}_{\pi^*,\phi}$ is bounded as*

$$\operatorname{rank}(T^{\pi}_{\pi^*,\phi}) \leq 2d-1 \qquad \textit{and} \qquad \operatorname{rank}(T^{\pi}_{0,\phi}) \leq 2d-1\ .$$

Further, the non-zero eigenvalues of $T^{\pi}_{\pi^*,\phi}$ and $T^{\pi}_{0,\phi}$ are given by

$$\begin{cases} 1-p_i & \textit{for } s=(i,b) \textit{ where } i \in [d-1] \\ (1-p_i)\Pr_{x\sim \mathit{Unif}(\mathcal{X}_s)}(\pi^*(x)=\pi(x)) & \textit{for } s=(i,g) \textit{ where } i \in [d-1] \\ 1 & \textit{for } s=-. \end{cases}$$

and

$$\begin{cases} \frac{1-p_i}{2} & \textit{for } s = (i, g) \textit{ where } i \in [d-1] \\ \frac{1-p_i}{2} & \textit{for } s = (i, b) \textit{ where } i \in [d-1] \\ 0 & \textit{for } s \in \{+, (d, g), (d, b))\} \\ 1 & \textit{for } s = -. \end{cases}$$

respectively.

Proof. We can write the transition probability from observation x to x' as

$$\begin{aligned} T^{\pi}_{\pi^*,\phi}(x'|x) =& \mathbb{1}\{\pi(x) = \pi^*(x)\} P_{\text{good}}(\phi(x')|s = \phi(x)) \frac{1}{|\mathcal{X}_{\phi(x')}|} \\ &+ \mathbb{1}\{\pi(x) \neq \pi^*(x)\} P_{\text{bad}}(\phi(x')|s = \phi(x)) \frac{1}{|\mathcal{X}_{\phi(x')}|} \end{aligned}$$

where $P_{\text{good}} \in \mathbb{R}^{\mathcal{S}\times\mathcal{S}}$ and $P_{\text{bad}} \in \mathbb{R}^{\mathcal{S}\times\mathcal{S}}$ are the latent state transition kernels when the agent follows a good action and bad action respectively. Without loss of generality, we can assume that latent states are ordered as

$$(1, g), (2, g), \ldots, (d, g), (1, b), (2, b), \ldots, (d, b), +, -$$

in which case the agent can only move forward (or stay in the same state) in this order. Thus, when writing P_{good} and P_{bad} as matrices over $\mathcal{S} \times \mathcal{S}$ in this order, they are upper-triangular matrices. Their eigenvalues correspond to the entries on the diagonal and hence, the probability of staying in each latent state is an eigenvalue, including $1 - p_i$ for states (i, b) all $i \in [d-1]$ for both P_{good} and P_{bad}. In matrix form, the transition matrix over observations can be written as

$$T^{\pi}_{\pi^*,\phi} = \frac{|\mathcal{S}|}{|\mathcal{X}|} I_{\text{good}} \Phi^T P_{\text{good}} \Phi + \frac{|\mathcal{S}|}{|\mathcal{X}|} I_{\text{bad}} \Phi^T P_{\text{bad}} \Phi,$$

where $\Phi \in \mathbb{R}^{\mathcal{S}\times\mathcal{X}}$ with $\Phi_{s,x} = \mathbb{1}\{\phi(x) = s\}$ is a matrix form of ϕ and $I_{\text{good}} \in \mathbb{R}^{\mathcal{X}\times\mathcal{X}}$ and $I_{\text{bad}} \in \mathbb{R}^{\mathcal{X}\times\mathcal{X}}$ are diagonal matrices with entries $[I_{\text{good}}]_{x,x} = \mathbb{1}\{\pi(x) = \pi^*(x)\}$

and $[I_{\text{bad}}]_{x,x} = \mathbb{1}\{\pi(x) \neq \pi^*(x)\}$, respectively. By the Weinstein–Aronszajn identity, the eigenvalues of $T^{\pi}_{\pi^*,\phi}$ are identical to the eigenvalues of

$$\frac{|\mathcal{S}|}{|\mathcal{X}|}\Phi I_{\text{good}}\Phi^T P_{\text{good}} + \frac{|\mathcal{S}|}{|\mathcal{X}|}\Phi I_{\text{bad}}\Phi^T P_{\text{bad}} = I_{\mathcal{S},\text{good}}P_{\text{good}} + I_{\mathcal{S},\text{bad}}P_{\text{bad}},$$

where $I_{\mathcal{S},\text{good}} \in \mathbb{R}^{\mathcal{S}\times\mathcal{S}}$ and $I_{\mathcal{S},\text{bad}} \in \mathbb{R}^{\mathcal{S}\times\mathcal{S}}$ are diagonal matrices that contain for each $s \in \mathcal{S}$ the probability that policy π matches π^* or does not match π^* on observations of s, respectively. Finally, $I_{\mathcal{S},\text{good}}P_{\text{good}} + I_{\mathcal{S},\text{bad}}P_{\text{bad}}$ is also an upper triangular matrix whose eigenvalues are the entries on the diagonal. Therefore, the eigenvalues of this matrix and $T^{\pi}_{\pi^*,\phi}$ are

$$\begin{cases} 1 - p_i & \text{for } s = (i,b) \text{ where } i \in [d-1] \\ (1-p_i)\Pr_{x\sim\text{Unif}(\mathcal{X}_s)}(\pi^*(x) = \pi(x)) & \text{for } s = (i,g) \text{ where } i \in [d-1] \\ 0 & \text{for } s \in \{+, (d,g), (d,b))\} \\ 1 & \text{for } s = -. \end{cases}$$

Thus, the rank of $T^{\pi}_{\pi^*,\phi}$ is at most $2d-1$. Analogously, we can show that the eigenvalues of $T^{\pi}_{0,\phi}$ are

$$\begin{cases} \frac{1-p_i}{2} & \text{for } s = (i,b) \text{ and } (i,g) \text{ where } i \in [d-1] \\ 0 & \text{for } s \in \{+, (d,g), (d,b))\} \\ 1 & \text{for } s = -. \end{cases}$$

Thus, the rank of $T^{\pi}_{\pi^*,\phi}$ is at most $2d-1$. □

Lemma 69 (Gilbert-Varshamov bound (Massart, 2007))**.** *Let $N > 1$. There exists a subset $\mathcal{V}$ of $\{0,1\}^N$ of size $|\mathcal{V}| \geq \exp(N/8)$ such that*

$$\sum_{i=1}^{N} \mathbb{1}\{v_i \neq v'_i\} \geq \frac{N}{4} \tag{8.29}$$

for all $v, v' \in \mathcal{V}$.

Proof of Theorem 41

In the following, we provide the lower bound which states that the factor of $\Omega(H^d)$ in unavoidable without making further assumptions. We restate Theorem 41 here with explicit constants:

Theorem (Theorem 41 restated)**.** *Let $\widetilde{\varepsilon} \in (0, 1/26)$, $\delta \in (0, 1/2)$, $d \geq 4$ and $H \geq 219d$. There exists a realizable policy class of size $(H/d)^d$ and a family of MDPs with rank at most $2d$, finite observation space, horizon H and two actions such that: Any algorithm that returns an $\widetilde{\varepsilon}$-optimal policy in any MDP in this family with probability at least $1 - \delta$ has to collect at least*

$$\frac{1}{12168 \cdot H\widetilde{\varepsilon}^2}\left(\frac{H}{41d}\right)^{d/2} \log\left(\frac{1}{2\delta}\right)$$

episodes in expectation in some MDP in this family.

Proof. Consider any $(\widetilde{\varepsilon}, \delta)$-PAC RL algorithm $\mathscr{A}$. Our lower bound is based on the policy class Π and the family of MDPs $\mathscr{M}$ constructed in Section 8.4.3. We set $|\Pi| = (H/d)^d$ and $p_i = d/H$ for all $i \in [d]$.

We first define additional notation. Let the random variable G denote the first time-step in an episode when an observation from the latent state (d, g) or (d, g) is observed. In order to reach these latent states, the agent is required to do $d - 1$ latent state progressions, each happening with probability $p_1, \ldots, p_{d-1}$ respectively. Furthermore, for our constructions in Section 8.4.3 of the class $\mathcal{M}$, we note that the distribution of G only depends on $\{p_i\}_{i<d}$, d and H, but is otherwise independent of the MDP instance, the parameter ε and the played policy. In fact, when $p_i = d/H$,

an application of Lemma **??** implies that

$$\Pr(G \leq H-1) \geq 1 - \exp(-2/5). \tag{8.30}$$

Now, consider any MDP $M_{\pi^*,\phi} \in \mathscr{M}$ and let $V_{\pi^*,\phi}(\pi)$ denote the expected return of the policy π in the MDP $M_{\pi^*,\phi}$. From our MDP construction, we note that for the optimal policy π^*,

$$V_{\pi^*,\phi}(\pi^*) = \left(\frac{1}{2} + \varepsilon\right) \Pr(G \leq H-1).$$

Similarly, for any other policy $\pi \in \Pi$, we have[1]

$$V_{\pi^*,\phi}(\pi) = \frac{1}{2} \Pr(G \leq H-1) + \varepsilon \mathbb{E}^{\pi}_{\pi^*,\phi}\left[\mathbb{1}\{\pi(X_{1:G-1}) = \pi^*(X_{1:G-1})\}\right] \Pr(G \leq H-1),$$

where $\{\pi(X_{1:G-1}) = \pi^*(X_{1:G-1})\}$ denotes the event that the action chosen by π agrees with that chosen by π^* on the observations $X_{1:G-1}$ up to time step $G-1$. Hence, we have that the suboptimality gap for the policy π is

$$V_{\pi^*,\phi}(\pi^*) - V_{\pi^*,\phi}(\pi) = \varepsilon \Pr(G \leq H-1) \Pr^{\pi}_{\pi^*,\phi}(\exists h \leq G-1 \ \text{ s.t. } \pi(X_h) \neq \pi^*(X_h)) \ . \tag{8.31}$$

Next, define the random variable τ to denote the number of episodes after which the algorithm $\mathscr{A}$ terminates and let $\widehat{\pi}$ denote the policy returned on termination. Both, τ and $\widehat{\pi}$, depend on the algorithm $\mathscr{A}$ and the underlying MDP on which $\mathscr{A}$ collects data from. Since the algorithm $\mathscr{A}$ is $(\widetilde{\varepsilon}, \delta)$-PAC, we have that for any MDP $M_{\pi^*,\phi}$, with probability at least $1-\delta$,

$$V_{\pi^*,\phi}(\pi^*) - V_{\pi^*,\phi}(\widehat{\pi}) \leq \widetilde{\varepsilon}.$$

Using the relation in (8.31), and plugging in the bound in (8.30), in the above, we get that

$$\varepsilon \Pr(G \leq H-1) \Pr^{\widehat{\pi}}_{\pi^*,\phi}(\exists h \leq G-1 \ \text{ s.t. } \widehat{\pi}(X_h) \neq \pi^*(X_h)) \leq \widetilde{\varepsilon}, \tag{8.32}$$

[1]Throughout the proof, for any random variable Y, we define the notation $\mathbb{E}^{\pi}_{\pi^*,\phi}[Y]$ to denote the expectation of Y where the trajectory is drawn using the policy π in the MDP $M_{\pi^*,\phi}$.

must hold with probability at least $1-\delta$ for any MDP $M_{\pi^*,\phi}$. For our lower bound constructions, we set

$$\varepsilon = \frac{4\widetilde{\varepsilon}}{\Pr(G \leq H-1)} \leq 13\widetilde{\varepsilon}, \tag{8.33}$$

and thus (8.32) implies that $\Pr^{\hat{\pi}}_{\pi^*,\phi}(\widehat{\pi}(X_{1:G-1}) = \pi^*(X_{1:G-1})) \geq 3/4$ must hold with probability at least $1-\delta$. Define the event

$$\mathrm{Opt}^{\mathscr{A}}_{\pi^*,\phi} := \big\{\Pr^{\hat{\pi}}_{\pi^*,\phi}(A_{1:G-1} = \pi^*(X_{1:G-1})) \geq 3/4\big\}.$$

The above analysis suggests that for any $M_{\pi^*,\phi}$

$$\Pr_{\pi^*,\phi}\big(\mathrm{Opt}^{\mathscr{A}}_{\pi^*,\phi}\big) \geq 1-\delta. \tag{8.34}$$

Next, for any $\pi^* \in \Pi$, define the measure $\Pr_{\pi^*}(Y) = \frac{1}{|\Phi|}\sum_{\phi\in\Phi}\Pr_{\pi^*,\phi}(Y)$, i.e. the probability measure induced by first picking ϕ uniformly at random from the set of all mappings Φ and then considering the distribution induced by $M_{\pi^*,\phi}$. The measure $\Pr_0(Y) = \frac{1}{|\Phi|}\sum_{\phi\in\Phi}\Pr_{0,\phi}(Y)$ is defined analogously for the MDP $M_{0,\phi}$. Thus, from (8.34), we have that for any $\pi^* \in \Pi$,

$$\Pr_{\pi^*}(\mathrm{Opt}^{\mathscr{A}}_{\pi^*,\phi}) \geq 1-\delta. \tag{8.35}$$

We are now ready to prove the desired lower bound. Let

$$T_{\max} := \frac{1}{\delta}\cdot\frac{1}{12168H\widetilde{\varepsilon}^2}\Big(\frac{H}{41d}\Big)^{d/2}\cdot\log(1/2\delta).$$

There are two natural scenarios: either (a) $\Pr_{\pi^*}(\tau > T_{\max}) > \delta$ for some $\pi^* \in \Pi$, or (b) $\Pr_{\pi^*}(\tau > T_{\max}) \leq \delta$ for all $\pi^* \in \Pi$. We analyse the two cases separately below.

Case-(a): $\Pr_{\pi^*}(\tau > T_{\max}) > \delta$ for some $\pi^* \in \Pi$. The lower bound follows immediately in this case. Note that,

$$\max_{\phi \in \Phi} \mathbb{E}_{\pi^*,\phi}[\tau] > \mathbb{E}_{\pi^*}[\tau] \geq \Pr_{\pi^*}(\tau > T_{\max}) \cdot T_{\max} \geq \delta T_{\max} \ .$$

Hence, there exists an MDP in $M_{\pi^*,\phi} \in \mathscr{M}$ for which the expected number of episodes collected by the algorithm $\mathscr{A}$ is at least $\delta T_{\max}$, which is the desired lower bound.

Case-(b): $\Pr_{\pi^*}(\tau > T_{\max}) \leq \delta$ for all $\pi^* \in \Pi$. Due to (8.35), for any policy $\pi^* \in \Pi$, we have:

$$\begin{aligned}\Pr_{\pi^*}(\tau \leq T_{\max} \wedge \mathrm{Opt}^{\mathscr{A}}_{\pi^*,\phi}) &= \Pr_{\pi^*}(\mathrm{Opt}^{\mathscr{A}}_{\pi^*,\phi}) - \Pr_{\pi^*}(\tau > T_{\max} \wedge \mathrm{Opt}^{\mathscr{A}}_{\pi^*,\phi}) \\ &\geq 1 - 2\delta.\end{aligned}$$

The above condition intuitively states that the policy returned by the algorithm will, with high probability, match the actions of the optimal policy for $G-1$ time steps for any policy $\pi^* \in \Pi$. On the other hand, we show in Lemma 74 through a packing argument that the expected number of policies that can be matched for $G-1$ steps when observations are drawn uniformly is bounded, i.e.

$$\mathbb{E}_{unif}\big[\sum_{\pi^*} \mathbb{1}\{\pi^*(X_{1:G}) = \pi(X_{1:G})\}\big] \leq (41 \log(H/d))^d H + 2 \ ,$$

where the notation $\mathbb{E}_{unif}[\cdot]$ denotes that $X_{1:G}$ are drawn independently from uniform($\mathcal{X}$). We denote this bound by $C = (41 \log(H/d))^d H + 2$. We show in Lemma 70 through a careful information-theoretic argument that the expected stopping time of the algorithm $\mathcal{A}$ on instances $M_{0,\phi}$ is bounded from below as

$$\mathbb{E}_0[\tau] \geq \frac{1}{8\varepsilon^2}\Big(\frac{|\Pi|}{C} - \frac{8}{3}\Big) \log(1/2\delta) - \Big(2T_{\max} + \frac{7}{12\varepsilon^2} \log(1/2\delta)\Big) \cdot \frac{|\Pi|}{C} \cdot \Delta(T_{\max}) \ ,$$

where $\Delta(T_{\max}) := 4T_{\max}^2 H^2 |\mathcal{S}|/N$ accounts for the differences in observation distributions in different instances of $\mathscr{M}$.

Plugging in the value of $|\Pi|$ and C, we note that

$$\frac{|\Pi|}{C} \geq \frac{(H/d)^d}{2H(41\log(H/d))^d} = \frac{1}{2H}\Big(\frac{H}{41d\log(H/d)}\Big)^d \geq \frac{1}{2H}\Big(\frac{H}{41d}\Big)^{d/2} .$$

Additionally, for $d \geq 4$ and $H/d \geq 219$, we have $8/3 \leq (H/41d)^{d/2}/4H$. Combining these bounds yields

$$\mathbb{E}_0[\tau] \geq \frac{1}{6084H\widetilde{\varepsilon}^2}\Big(\frac{H}{41d}\Big)^{d/2}\log(1/2\delta) - \Big(2T_{\max} + \frac{7}{12\varepsilon^2}\log(1/2\delta)\Big)\cdot\frac{|\Pi|}{C}\cdot\Delta(T_{\max}),$$

Finally this bound only depends on the number of observations N through $\Delta(T_{\max})$ which goes to zero as $N \to \infty$. Therefore, we can pick N large enough such that the second term becomes small enough and thus

$$\mathbb{E}_0[\tau] \geq \frac{1}{12168H\widetilde{\varepsilon}^2}\Big(\frac{H}{41d}\Big)^{d/2}\log(1/2\delta) .$$

Since this bound holds on average over all MDPs $M_{0,\phi} \in \mathcal{M}$, this lower bound must also hold in at least one specific $M_{0,\phi} \in \mathcal{M}$. This gives us the desired statement. □

For the rest of the section, we will build on the notation introduced in the above proof. The following technical lemma gives a lower bound on $\mathbb{E}_0[\tau]$ for the case-(b) above.

Lemma 70. *Let $\mathscr{A}$ be any $(\widetilde{\varepsilon}, \delta)$-PAC RL algorithm. Let $T_{\max} \in \mathbb{N}$ and assume that $\Pr_{\pi^*}(\tau \leq T_{\max} \wedge \mathrm{Opt}^{\mathscr{A}}_{\pi^*,\phi}) \geq 1 - 2\delta$ holds for all $\pi^* \in \Pi$. Further, let $C > 0$ denote an upper-bound on the number of policy matches per episode, i.e., for all $\pi \in \Pi$,*

$$\mathbb{E}_{unif}\Big[\sum_{\pi^*} \mathbb{1}\{\pi^*(X_{1:G}) = \pi(X_{1:G})\}\Big] \leq C.$$

Then the expected stopping time τ for the algorithm $\mathscr{A}$ over MDP instances $M_{0,\phi}$ where ϕ is drawn randomly from Φ is bounded from below as

$$\mathbb{E}_0[\tau] \geq \frac{1}{8\varepsilon^2}\Big(\frac{|\Pi|}{C} - \frac{8}{3}\Big)\log(1/2\delta) - \Big(2T_{\max} + \frac{7}{12\varepsilon^2}\log(1/2\delta)\Big) \cdot \frac{|\Pi|}{C} \cdot \Delta(T_{\max}) \ ,$$

where $\Delta(T_{\max}) = 4T_{\max}^2 H^2 |\mathcal{S}|/N$.

Proof. Let G_i denote the first timestep when the agent reaches the latent state (d, g) or (d, b) in the ith episode collected by the algorithm $\mathscr{A}$. We denote by

$$N_{\pi^*}^{\tau \wedge T_{\max}} = \sum_{i=1}^{\tau \wedge T_{\max}} \mathbb{1}\{A_{i,1:G_i-1} = \pi^*(X_{i,1:G_i-1})\}$$

the number of episodes among the first $\tau \wedge T_{\max} = \min\{\tau, T_{\max}\}$ episodes where the actions $A_{i,1:G_i-1}$ played by $\mathscr{A}$ in the ith episode matches those of π^* on the corresponding observations, until the latent state (d, g) or (d, b) was reached. We first lower-bound the expected value of $N_{\pi^*}^{\tau \wedge T_{\max}}$ under the measure induced by $\Pr_0$. To that end, we introduce auxiliary MDPs $M_{0,\pi^*,\phi}$ that are identical to $M_{\pi^*,\phi}$ on all latent states except for (d, g). In $M_{0,\pi^*,\phi}$, we transition to both $+$ and $-$ with equal probability from the latent state (d, g). [2] Analogous to $\Pr_{\pi^*}$, we define $\Pr_{0,\pi^*}$ to denote the law when ϕ is drawn uniformly from Φ beforehand and the underlying MDPS is $M_{0,\pi^*,\phi}$. We also define $\Pr_0$ as the law when π^* is additionally drawn uniformly at random from Π beforehand. Finally, $\mathbb{E}_{0,\pi^*}[\cdot]$ and $\mathbb{E}_0[\cdot]$ are defined as the expectations under Π_{0,π^*} and $\Pr_0$ respectively. Following the standard machinery for lower-bounds (Garivier et al., 2019; Domingues et al., 2021), we get that

$$\begin{aligned}\mathbb{E}_0[N_{\pi^*}^{\tau \wedge T_{\max}}] &\overset{(i)}{\geq} \mathbb{E}_{0,\pi^*}[N_{\pi^*}^{\tau \wedge T_{\max}}] - T_{\max}\Delta(T_{\max}) \\ &\geq \mathbb{E}_{0,\pi^*}[N_{\pi^*}^{\tau \wedge T_{\max}}] \cdot \frac{\mathrm{kl}(1/2, 1/2 + \varepsilon)}{4\varepsilon^2} - T_{\max}\Delta(T_{\max})\end{aligned}$$

[2] Note that the MDPs $M_{0,\pi^*,\phi}$ are only an analytical tool and do not belong to the class $\mathscr{M}$.

$$= \frac{1}{4\varepsilon^2} \mathrm{KL}\Big(\Pr_{0,\pi^*}^{\mathcal{F}_{\tau\wedge T_{\max}}}, \Pr_{\pi^*}^{\mathcal{F}_{\tau\wedge T_{\max}}}\Big) - T_{\max}\Delta(T_{\max}),$$

where the inequality (i) follow from an application of Lemma 73. In the above, for any distributions P and Q, the notation $\mathrm{KL}(P\|Q)$ denotes the KL-divergence between P and Q, and the superscript $\mathcal{F}_{\tau\wedge T_{\max}}$ denotes the conditioning w.r.t. the natural filtration generated by the first $\tau \wedge T_{\max}$ episodes. Further, define $\mathrm{kl}(p,q)$ to denote the KL-divergence of two Bernoulli random variables with means p and q respectively. We now apply Lemma 1 of Garivier et al. (2019) which gives that for any $\mathcal{F}_{\tau\wedge T_{\max}}$-measurable variable random variable Z with values in $[0,1]$, we have that

$$\begin{aligned}
\mathbb{E}_0[N_{\pi^*}^{\tau\wedge T_{\max}}] &\geq \frac{1}{4\varepsilon^2}\mathrm{kl}(\mathbb{E}_{0,\pi^*}[Z], \mathbb{E}_{\pi^*}[Z]) - T_{\max}\Delta(T_{\max}) \\
&\overset{(ii)}{\geq} \frac{1}{4\varepsilon^2}(1-\mathbb{E}_{0,\pi^*}[Z])\log\Big(\frac{1}{1-\mathbb{E}_{\pi^*}[Z]}\Big) - \frac{1}{4\varepsilon^2}\log(2) - T_{\max}\Delta(T_{\max}) \\
&\overset{(iii)}{\geq} \frac{1}{4\varepsilon^2}(1-\mathbb{E}_0[Z])\log\Big(\frac{1}{1-\mathbb{E}_{\pi^*}[Z]}\Big) - \frac{\log(2)}{4\varepsilon^2} \\
&\qquad - \Big(T_{\max} + \frac{1}{4\varepsilon^2}\log\Big(\frac{1}{1-\mathbb{E}_{\pi^*}[Z]}\Big)\Big)\Delta(T_{\max}) \qquad (8.36)
\end{aligned}$$

where the inequality (ii) follows due to the fact that $\mathrm{kl}(p,q) \geq (1-p)\log(1/(1-q)) - \log(2)$, and the inequality (iii) holds from an application of Lemma 73. Next, define the random variable $Z_{\pi*}$ as

$$Z_{\pi^*} = \Pr_{\pi^*}\big(\tau \leq T_{\max} \wedge \mathrm{Opt}_{\pi^*,\phi}^{\mathcal{A}} \mid \mathcal{F}_{\tau\wedge T_{\max}}\big)$$

and note that Z_{π^*} is $\mathcal{F}_{\tau\wedge T_{\max}}$-measurable by construction. Thus, plugging $Z = Z_{\pi^*}$ in (8.36) and using the fact that $\mathbb{E}_{\pi^*}[Z_{\pi^*}] = \Pr_{\pi^*}(\tau \leq T_{\max} \wedge \mathrm{Opt}_{\pi^*,\phi}^{\mathcal{A}}) \geq 1-2\delta$ (by assumption), we get that

$$\mathbb{E}_0[N_{\pi^*}^{\tau\wedge T_{\max}}] \geq \frac{1}{4\varepsilon^2}(1-\mathbb{E}_0[Z_{\pi^*}])\log(1/2\delta) - \frac{\log(2)}{4\varepsilon^2} - \Big(T_{\max} + \frac{1}{4\varepsilon^2}\log(1/2\delta)\Big)\Delta(T_{\max}),$$

Summing the above for all policies $\pi^* \in \Pi$ yields that

$$\sum_{\pi^*\in\Pi} \mathbb{E}_0[N_{\pi^*}^{\tau\wedge T_{\max}}] \geq \frac{1}{4\varepsilon^2}\Big(|\Pi| - \sum_{\pi^*\in\Pi}\mathbb{E}_0[Z_{\pi^*}]\Big)\log(1/2\delta) - \frac{|\Pi|\log(2)}{4\varepsilon^2}$$

$$- \Big(T_{\max} + \frac{\log(1/2\delta)}{4\varepsilon^2}\Big)|\Pi|\Delta(T_{\max}). \tag{8.37}$$

We further lower bound the above by deriving an upper bound on $\sum_{\pi^* \in \Pi} \mathbb{E}_0[Z_{\pi^*}]$. Note that for any $\pi^* \in \Pi$,

$$\begin{aligned}
Z_{\pi^*} &= \Pr_{\pi^*}\big(\tau \le T_{\max} \wedge \mathrm{Opt}^{\mathscr{A}}_{\pi^*,\phi} \mid \mathcal{F}_{\tau \wedge T_{\max}}\big) \\
&\overset{(i)}{=} \mathbb{E}_{\pi^*}\big[\mathbb{1}\{\tau \le T_{\max}\}\mathbb{1}\big\{\Pr^{\hat{\pi}}_{\pi^*,\phi}(\widehat{\pi}(X_{1:G-1}) = \pi^*(X_{1:G-1})) \ge 3/4\big\} \mid \mathcal{F}_{\tau \wedge T_{\max}}\big] \\
&\overset{(ii)}{\le} \frac{4}{3}\mathbb{E}_{\pi^*}\big[\mathbb{1}\{\tau \le T_{\max}\} \Pr^{\hat{\pi}}_{\pi^*,\phi}(\widehat{\pi}(X_{1:G-1}) = \pi^*(X_{1:G-1})) \mid \mathcal{F}_{\tau \wedge T_{\max}}\big]
\end{aligned}$$

where the equality (i) above follows from the definition of $\mathrm{Opt}^{\mathscr{A}}_{\pi^*,\phi}$, and the inequality in (ii) holds from an application of Markov's inequality and using the fact that $\mathbb{1}\{\tau \le T_{\max}\}$ is $\mathcal{F}_{\tau \wedge T_{\max}}$-measurable (by construction). Note that when $\tau \le T_{\max}$ (the only outcomes where the random variable inside the expectation can be non-zero), we also have that $\hat{\pi}$ is $\mathcal{F}_{\tau \wedge T_{\max}}$-measurable.[3] Thus, the only randomness in $\Pr^{\hat{\pi}}_{\pi^*,\phi}$ above is due to ϕ which affects the distribution of the observations $X_{1:G-1}$ inside $\Pr^{\hat{\pi}}_{\pi^*,\phi}$. However, note that this distribution is exactly the distribution of observations in the $(\tau+1)$th episode if we assume (without loss of generality) that the algorithm plays $\hat{\pi}$ in that episode. Thus, we can write the right hand side in the above as

$$Z_{\pi^*} \le \frac{4}{3}\mathbb{1}\{\tau \le T_{\max}\} \Pr_{\pi^*}\big(\pi^*(X_{\tau+1,1:G_{\tau+1}-1}) = \hat{\pi}(X_{\tau+1,1:G_{\tau+1}-1}) \mid \mathcal{F}_{\tau \wedge T_{\max}}\big).$$

An application of Lemma 72 in the above implies that

$$Z_{\pi^*} \le \frac{4}{3}\mathbb{1}\{\tau \le T_{\max}\}\Big(\Pr_{\mathrm{unif}}(\pi^*(X_{1:G-1}) = \hat{\pi}(X_{1:G-1})) + \frac{2|\mathcal{S}|H^2(T_{\max}+1)}{N}\Big), \tag{8.38}$$

[3]This assumes a deterministic algorithm but we can handle stochastic algorithms by simply conditioning on $\hat{\pi}$ (and therefore the internal randomness of the algorithm) as well.

which further implies that

$$\sum_{\pi^*\in\Pi}\mathbb{E}_0[Z_{\pi^*}] \le \frac{4}{3}\mathbb{E}_0\Big[\sum_{\pi^*\in\Pi}\Pr_{\text{unif}}(\pi^*(X_{1:G-1})=\hat{\pi}(X_{1:G-1}))\Big] + \frac{4}{3}|\Pi|\Delta(T_{\max})$$
$$= \frac{4}{3}C + \frac{4}{3}|\Pi|\Delta(T_{\max}), \tag{8.39}$$

where the value of C and $\Delta(T_{\max})$ are given in the lemma statement. Plugging the above bound in (8.37), we get that

$$\sum_{\pi^*\in\Pi}\mathbb{E}_0[N_{\pi^*}^{\tau\wedge T_{\max}}] \ge \frac{1}{4\varepsilon^2}\Big(|\Pi| - \frac{4}{3}C\Big)\log(1/2\delta) - \frac{|\Pi|\log(2)}{4\varepsilon^2}$$
$$- \Big(T_{\max} + \frac{7\log(1/2\delta)}{12\varepsilon^2}\Big)|\Pi|\Delta(T_{\max}). \tag{8.40}$$

Relating policy matches to stopping time: In the following, we show an upper bound on $\sum_{\pi^*\in\Pi}\mathbb{E}_0[N_{\pi^*}^{\tau\wedge T_{\max}}]$ that, when taken together with the above lower bound, gives us the desired lower bound on $\mathbb{E}_0[\tau]$. We note that

$$\begin{aligned}
\sum_{\pi^*\in\Pi}\mathbb{E}_0[N_{\pi^*}^{\tau\wedge T_{\max}}] &= \sum_{t=1}^{T_{\max}}\mathbb{E}_0\Big[\mathbb{1}\{\tau > t-1\}\sum_{\pi^*\in\Pi}\mathbb{1}\{A_{t,1:G_t-1} = \pi^*(A_{t,1:G_t-1})\}\Big] \\
&= \sum_{t=1}^{T_{\max}}\mathbb{E}_0\Big[\mathbb{1}\{\tau > t-1\}\mathbb{E}_0\Big[\sum_{\pi^*\in\Pi}\mathbb{1}\{\pi_t(X_{t,1:G_t-1}) = \pi^*(X_{t,1:G_t-1})\} \mid \pi_t, \mathcal{F}_{t-1}\Big]\Big] \\
&\overset{(i)}{\le} \sum_{t=1}^{T_{\max}}\mathbb{E}_0\Big[\mathbb{1}\{\tau > t-1\}\mathbb{E}_{\text{unif}}\Big[\sum_{\pi^*\in\Pi}\mathbb{1}\{\pi_t(X_{1:G-1}) = \pi^*(X_{1:G-1})\}\Big]\Big] \\
&\qquad + T_{\max}|\Pi|\Delta(T_{\max}) \\
&\overset{(ii)}{\le} \sum_{t=1}^{T_{\max}}\mathbb{E}_0[\mathbb{1}\{\tau > t-1\}C] + T_{\max}|\Pi|\Delta(T_{\max}) \\
&\le C\mathbb{E}_0[\tau\wedge T_{\max}] + T_{\max}|\Pi|\Delta(T_{\max}) \\
&\le C\mathbb{E}_0[\tau] + T_{\max}|\Pi|\Delta(T_{\max})
\end{aligned} \tag{8.41}$$

where the inequality (i) follows from an application of Lemma 72 and the inequality (ii) follows from the definition of C given in the lemma statement.

Combining the lower bound in (8.40) with the upper bound in (8.41) and rearranging the terms yields that

$$\begin{aligned}\mathbb{E}_0[\tau] &\geq \frac{1}{4\varepsilon^2}\Big(\frac{|\Pi|}{C} - \frac{4}{3}\Big)\log(1/2\delta) - \frac{|\Pi|}{C}\frac{1}{4\varepsilon^2}\log(2) \\ &\qquad - \Big(2T_{\max} + \frac{7}{12\varepsilon^2}\log(1/2\delta)\Big)\frac{|\Pi|}{C}\Delta(T_{\max}) \\ &\geq \frac{1}{8\varepsilon^2}\Big(\frac{|\Pi|}{C} - \frac{8}{3}\Big)\log(1/2\delta) - \Big(2T_{\max} + \frac{7}{12\varepsilon^2}\log(1/2\delta)\Big)\frac{|\Pi|}{C}\Delta(T_{\max})\end{aligned}$$

where the last inequality is due to the fact that $\delta \leq 1 \leq \exp(2)/4$ and thus $\log(1/2\delta) \geq 2\log(2)$. This concludes the desired statement. □

Change of observation distributions

Lemma 71. *Let $\mathcal{F}_{i,h-1} = \sigma\big(\mathcal{F}_{i-1}, \{X_{i,h'}, A_{i,h'}, R_{i,h'}\}_{h'\in[h-1]}\big)$ be the sigma-field of everything observable up to before the h'th observation in episode i. Then*

$$\begin{aligned}\|\Pr_{0,\pi^*}(X_{i,h}|\mathcal{F}_{i,h-1}) - \Pr_{unif}(X_{i,h})\|_1 &\leq 2\frac{|\mathcal{S}|Hi}{N} \\ \|\Pr_{\pi^*}(X_{i,h}|\mathcal{F}_{i,h-1}) - \Pr_{unif}(X_{i,h})\|_1 &\leq 2\frac{|\mathcal{S}|Hi}{N} \\ \|\Pr_{0}(X_{i,h}|\mathcal{F}_{i,h-1}) - \Pr_{unif}(X_{i,h})\|_1 &\leq 2\frac{|\mathcal{S}|Hi}{N}\ ,\end{aligned}$$

where $\Pr_{unif}(X_{i,h})$ is the uniform distribution over all possible observations $\mathcal{X}$.

Proof. We prove the statement for $\Pr_{0,\pi^*}$ but the others can be proven analogously.

Let $\mathcal{F}_{i,h-1} = \sigma\big(\mathcal{F}i-1, \{X_{i,h'}, A_{i,h'}, R_{i,h'}\}_{h'\in[h-1]}\big)$ be the sigma-field of everything observable up to before the h'th observation in episode i. Further, $\mathcal{F}'_{i,h-1} = \sigma\big(\mathcal{F}_{i,h-1}, \{S_{k,l}\}_{k\in[i-1],l\in[H]}, \{S_{i,l}\}_{l\in[h]}\big)$ is the sigma-field that in addition includes all latent state labels up to $S_{i,h}$.

Since $\mathcal{F}'_{i,h}$ determines the latent state mapping ϕ for the observations encountered so far but all assignment of the remaining observations remains equally likely, we can write the conditional distribution of observation $X_{i,h}$ in closed form as

$$\Pr_{0,\pi^*}\big(X_{i,h} = x|\mathcal{F}'_{i,h-1}\big) = \begin{cases} \frac{1}{N/|\mathcal{S}|} & \text{if } x \in \mathcal{X}^s_{\text{obs}} \\ 0 & \text{if } x \in \mathcal{X}_{\text{obs}} \setminus \mathcal{X}^s_{\text{obs}} \\ \big(1 - \frac{|\mathcal{X}^s_{\text{obs}}|}{N/|\mathcal{S}|}\big)\frac{1}{N-|\mathcal{X}_{\text{obs}}|} & \text{if } x \in \mathcal{X} \setminus \mathcal{X}_{\text{obs}} \end{cases}$$

where $\mathcal{X}_{\text{obs}}$ are all observations encountered so far and $\mathcal{X}^s_{\text{obs}}$ are all observations encountered in $S_{i,h}$ so far. Now

$$\big|\Pr_{0,\pi^*}\big(X_{i,h} = x|\mathcal{F}'_{i,h-1}\big) - \Pr_{\text{unif}}(X_{i,h} = x)\big| = \begin{cases} \frac{1}{N/|\mathcal{S}|} - \frac{1}{N} & \text{if } x \in \mathcal{X}^s_{\text{obs}} \\ \frac{1}{N} & \text{if } x \in \mathcal{X}_{\text{obs}} \setminus \mathcal{X}^s_{\text{obs}} \\ \Big|\frac{1}{N} - \big(1 - \frac{|\mathcal{X}^s_{\text{obs}}|}{N/|\mathcal{S}|}\big)\frac{1}{N-|\mathcal{X}_{\text{obs}}|}\Big| & \text{if } x \in \mathcal{X} \setminus \mathcal{X}_{\text{obs}} \end{cases}$$

and thus

$$\big\|\Pr_{0,\pi^*}\big(X_{i,h}|\mathcal{F}'_{i,h-1}\big) - \Pr_{\text{unif}}(X_{i,h})\big\|_1 \leq \frac{2\max\{|\mathcal{S}||\mathcal{X}^s_{\text{obs}}|, |\mathcal{X}_{\text{obs}}|\}}{N} \leq \frac{2|\mathcal{S}|T_{\max}H}{N} \ .$$

Since $\Pr_{0,\pi^*}(X_{i,h}|\mathcal{F}_{i,h-1}) = \mathbb{E}_{0,\pi^*}(\Pr_{0,\pi^*}(X_{i,h}|\mathcal{F}'_{i,h-1})|\mathcal{F}_{i,h-1})$ by marginalization, we also have

$$\|\Pr_{0,\pi^*}(X_{i,h}|\mathcal{F}_{i,h-1}) - \Pr_{\text{unif}}(X_{i,h})\|_1 \leq \frac{2|\mathcal{S}|T_{\max}H}{N}$$

which means that as long as $T_{\max} \ll N$, the conditional distribution of the current observations remains close to Uniform($\mathcal{X}$). □

Lemma 72. *Let $\mathcal{F}_i = \sigma\big(\{X_{k,h'}, A_{k,h'}, R_{k,h'}\}_{h'\in[H],k\in[i]}\big)$ denote the natural filtration at the end of episode i. Then*

$$\|\Pr_{\pi^*}(X_{i,1:H}|\mathcal{F}_{i-1}) - \Pr_{unif}(X_{i,1:H})\|_1 \leq \frac{2|\mathcal{S}|H^2 i}{N}$$
$$\|\Pr_0(X_{i,1:H}|\mathcal{F}_{i-1}) - \Pr_{unif}(X_{i,1:H})\|_1 \leq \frac{2|\mathcal{S}|H^2 i}{N} \ ,$$

where $\Pr_{unif}(X_{i,1:H})$ *is the product distribution of uniform distributions over all possible observations* $\mathcal{X}$*.*

Proof. The random variables $X_{i,1:H}$ are $\mathcal{F}_i$-measurable. We can therefore consider any event $A \in \mathcal{F}_i$ and show that

$$|\Pr_{\pi^*}(A|\mathcal{F}_{i-1}) - \Pr_{\text{unif}}(A)| \leq \frac{|\mathcal{S}|H^2 i}{N}$$
$$|\Pr_0(A|\mathcal{F}_{i-1}) - \Pr_{\text{unif}}(A)| \leq \frac{|\mathcal{S}|H^2 i}{N}$$

analogously to Lemma 73 below. The result then follows immediately from the identity of ℓ_1 norm and total variation. □

Lemma 73. *Let* $A \in \mathcal{F}_{T_{\max}}$ *be any event that is* $\mathcal{F}_{T_{\max}}$*-measurable, where* $\mathcal{F}_{T_{\max}}$ *is the sigma-field induced by everything up to* $T_{\max}$ *episodes. Then*

$$|\Pr_0(A) - \Pr_{0,\pi^*}(A)| \leq \Delta(T_{\max}) = \frac{4T_{\max}^2 H^2 |\mathcal{S}|}{N} \ .$$

Proof. Denote by $\Pr_{0,\pi^*}^{t,h,\text{unif}}$ the distribution that matches $\Pr_{0,\pi^*}$ but where all observations after the h'th observation in episode t are drawn uniformly random from $\mathcal{X}$. First, since $A \in \mathcal{F}_{T_{\max}}$ and $\Pr_{0,\pi^*}(B) = \Pr_{0,\pi^*}^{T_{\max},\text{unif}}(B)$ for all events $B \in \mathcal{F}_{T_{\max}}$, we have

$$\Pr_{0,\pi^*}(A) = \Pr_{0,\pi^*}^{T_{\max},H,\text{unif}}(A) \ .$$

We now peel off one time step at a time by showing that $\left|\Pr_{0,\pi^*}^{t,h,\text{unif}}(A) - \Pr_{0,\pi^*}^{t,h+1,\text{unif}}(A)\right| \leq \frac{2|\mathcal{S}|Ht}{N}$. By the definition of these probabilities, the following chain of equations holds:

$$\Pr_{0,\pi^*}^{t,h,\text{unif}}(A)$$
$$= \mathbb{E}_{0,\pi^*}^{t,h,\text{unif}}\left[\Pr_{0,\pi^*}^{t,h,\text{unif}}(A|X_{t,h}, \mathcal{F}_{t,h-1})\right] = \mathbb{E}_{0,\pi^*}^{t,h,\text{unif}}\left[\Pr_{0,\pi^*}^{t,h-1,\text{unif}}(A|X_{t,h}, \mathcal{F}_{t,h-1})\right]$$

$$= \mathbb{E}^{t,h,\text{unif}}_{0,\pi^*}\Big[\sum_{x\in\mathcal{X}} \Pr^{t,h-1,\text{unif}}_{0,\pi^*}(A|X_{t,h}=x,\mathcal{F}_{t,h-1})\Pr^{t,h,\text{unif}}_{0,\pi^*}(X_{t,h}=x|\mathcal{F}_{t,h-1})\Big]$$

$$= \mathbb{E}^{t,h,\text{unif}}_{0,\pi^*}\Big[\sum_{x\in\mathcal{X}} \Pr^{t,h-1,\text{unif}}_{0,\pi^*}(A|X_{t,h}=x,\mathcal{F}_{t,h-1})\Pr^{t,h-1,\text{unif}}_{0,\pi^*}(X_{t,h}=x|\mathcal{F}_{t,h-1})\Big]$$

$$+$$

$$\mathbb{E}^{t,h,\text{unif}}_{0,\pi^*}\Big[\sum_{x\in\mathcal{X}} \Pr^{t,h-1,\text{unif}}_{0,\pi^*}(A|X_{t,h}=x,\mathcal{F}_{t,h-1})\Big(\Pr^{t,h,\text{unif}}_{0,\pi^*}(X_{t,h}=x|\mathcal{F}_{t,h-1}) - \Pr^{t,h-1,\text{unif}}_{0,\pi^*}(X_{t,h}=x|\mathcal{F}_{t,}$$

$$= \Pr^{t,h-1,\text{unif}}_{0,\pi^*}(A)$$

$$+ \mathbb{E}^{t,h,\text{unif}}_{0,\pi^*}\Big[\sum_{x\in\mathcal{X}} \Pr^{t,h-1,\text{unif}}_{0,\pi^*}(A|X_{t,h}=x,\mathcal{F}_{t,h-1})(\Pr_{0,\pi^*}(X_{t,h}=x|\mathcal{F}_{t,h-1}) - \Pr_{\text{unif}}(X_{t,h}=x))\Big] \ .$$

Thus, by rearranging terms, we have

$$|\Pr^{t,h,\text{unif}}_{0,\pi^*}(A) - \Pr^{t,h-1,\text{unif}}_{0,\pi^*}(A)| \leq \mathbb{E}^{t,h,\text{unif}}_{0,\pi^*}\big[\|\Pr_{0,\pi^*}(X_{t,h}|\mathcal{F}_{t,h-1}) - \Pr_{\text{unif}}(X_{t,h})\|_1\big] \leq \frac{2|\mathcal{S}|Ht}{N} \ ,$$

where the last inequality follows from Lemma 71. We now consider

$$\begin{aligned}\Pr_{0,\pi^*}(A) - \Pr^{1,0,\text{unif}}_{0,\pi^*}(A) &= \Pr^{T_{\max},H,\text{unif}}_{0,\pi^*}(A) - \Pr^{1,0,\text{unif}}_{0,\pi^*}(A) \\ &= \sum_{h=1}^{H}\sum_{t=1}^{T_{\max}} \Pr^{t,h,\text{unif}}_{0,\pi^*}(A) - \Pr^{t,h-1,\text{unif}}_{0,\pi^*}(A)\end{aligned}$$

where $\Pr^{t,0,\text{unif}}_{0,\pi^*} = \Pr^{t-1,H,\text{unif}}_{0,\pi^*}$ and apply the bound to each term to arrive at

$$|\Pr_{0,\pi^*}(A) - \Pr^{1,0,\text{unif}}_{0,\pi^*}(A)| \leq \frac{2T^2_{\max}H^2|\mathcal{S}|}{N} \ .$$

Note that for the distribution $\Pr^{1,0,\text{unif}}_{0,\pi^*}$ all observations are drawn uniformly at random and the rewards do not depend on the actions. Thus, $\Pr^{1,0,\text{unif}}_{0,\pi^*} = \Pr^{1,0,\text{unif}}_{0}$ and we can derive analogously to above that

$$|\Pr_0(A) - \Pr^{1,0,\text{unif}}_0(A)| = |\Pr_0(A) - \Pr^{1,0,\text{unif}}_{0,\pi^*}(A)| \leq \frac{2T^2_{\max}H^2|\mathcal{S}|}{N} \ .$$

Combining both bounds using the triangle inequality yields the desired statement

$$|\Pr_0(A) - \Pr_{0,\pi^*}(A)| \leq \frac{4T^2_{\max}H^2|\mathcal{S}|}{N} \ .$$

□

Bounds on expected policy matches per episode

Lemma 74 (Bound on expected policy matches with equal p_i)**.** *Let $\pi\colon \mathcal{X} \mapsto \mathcal{A}$ any policy (that does not need to be in the given policy class Π) and $H \geq 62d$. Further, set $|\Pi| = (H/d)^d$, and $p = \frac{d}{H}$. Then*

$$\mathbb{E}_{unif}\Big[\sum_{\pi^*} \mathbb{1}\{\pi^*(X_{1:G} = \pi(X_{1:G})\}\Big] \leq \Big(41\log(H/d)\Big)^d H + 2 \ ,$$

where $\Pr_{unif}$ draws all H observations $X_{1:H}$ i.i.d. from $\mathrm{Uniform}(\mathcal{X})$ and G as usual.

Proof. For any $h \in \mathbb{N}$ with $d \leq h \leq H$, the following holds:

$$\begin{aligned}
&\mathbb{E}_{\mathrm{unif}}\Big[\sum_{\pi^*} \mathbb{1}\{\pi^*(X_{1:G} = \pi(X_{1:G})\}\Big] \\
&= \Pr(G \leq h)\mathbb{E}_{\mathrm{unif}}\Big[\sum_{\pi^*} \mathbb{1}\{\pi^*(X_{1:G} = \pi(X_{1:G})\} \ \mid G \leq h\Big] \\
&\quad + \Pr(G > h)\mathbb{E}_{\mathrm{unif}}\Big[\sum_{\pi^*} \mathbb{1}\{\pi^*(X_{1:G} = \pi(X_{1:G})\} \ \mid G > h\Big] \\
&\leq |\Pi| \Pr(G \leq h) + \mathbb{E}_{\mathrm{unif}}\Big[\sum_{\pi^*} \mathbb{1}\{\pi^*(X_{1:h} = \pi(X_{1:h})\}\Big] \\
&\leq (h-d+1)|\Pi|\Big(\frac{2peh}{d}\Big)^{d-1} + \mathbb{E}_{\mathrm{unif}}\Big[\sum_{\pi^*} \mathbb{1}\{\pi^*(X_{1:h} = \pi(X_{1:h})\}\Big] \ ,
\end{aligned}$$

where the last inequality applies Lemma 76. Note that by the construction of Π, there can only be one policy in Π which agrees with π on more than $\frac{7}{8}N$ observations in $\mathcal{X}$. With all other policies, π has to disagree on at least $1/8$ fraction of all possible observations. To see this, assume that there were two policies $\pi_1 \neq \pi_2$ in Π for which $\|\pi - \pi_i\| < N/8$. Then by triangle inequality $\|\pi_1 - \pi_2\| < N/4$ which contradicts the construction of Π. Thus, we can further bound the quantity of interest as

$$\mathbb{E}_{\mathrm{unif}}\Big[\sum_{\pi^*} \mathbb{1}\{\pi^*(X_{1:G} = \pi(X_{1:G})\}\Big] \leq (h-d+1)|\Pi|\Big(\frac{2peh}{d}\Big)^{d-1} + 1 + (|\Pi|-1)\Big(\frac{7}{8}\Big)^h$$

$$\leq |\Pi| h \Big(\frac{2peh}{d}\Big)^{d-1} + 1 + |\Pi| \exp(-h \log(8/7)) \ . \tag{8.42}$$

We use the worst-case choices of $|\Pi|$, p and h as

$$|\Pi| = \left(\frac{H}{d}\right)^d, \qquad h = \frac{\log|\Pi|}{\log(8/7)}, \qquad p = \frac{d}{H} \ .$$

Since the RHS of Equation 8.42 is non-decreasing in p and Π, a bound with these exact values is also valid when p and Π are smaller. Note that under these choices $H \geq 62d$ which implies $\frac{H}{d} \geq 15 \ln \frac{H}{d}$ is sufficient for $h \leq H - 1$.

With these choices, the last term of Equation 8.42 is bounded by 1, i.e., $|\Pi| \exp\big(-h \log \frac{8}{7}\big) = 1$, and the first term is bounded as

$$\begin{aligned} |\Pi| h \big(\frac{2peh}{d}\big)^{d-1} &= \big(\frac{2e}{\log(8/7)}\big)^d \big(\frac{p}{d}\big)^{d-1} |\Pi| (\log|\Pi|)^d \\ &\leq 41^d \big(\frac{Hd}{d} \log \frac{H}{d}\big)^d \big(\frac{p}{d}\big)^{d-1} \leq \big(41 \log(H/d)\big)^d H \ . \end{aligned}$$

□

Lemma 75 (Bound on expected policy matches with arbitrary p_i)**.** *Let the probability for progressions be $p_1, \ldots, p_{d-1}$ and let $\pi \colon \mathcal{X} \mapsto \mathcal{A}$ any policy (that does not need to be in the given policy class Π). Further, assume that*

$$|\Pi| \leq \exp\Big(\frac{H}{2} \log \frac{8}{7}\Big).$$

Then

$$\mathbb{E}_{unif}\Big[\sum_{\pi^*} \mathbb{1}\{\pi^*(X_{1:G} = \pi(X_{1:G})\}\Big] \leq 2 + |\Pi| \prod_{i=1}^{d-1} \Big(p_i \frac{\log|\Pi|}{\log(8/7)}\Big) \ ,$$

where $\Pr_{unif}$ draws all H observations $X_{1:H}$ i.i.d. from $\mathrm{Uniform}(\mathcal{X})$ and G as usual.

Proof. For any $h \in \mathbb{N}$ with $d \leq h \leq H$, the following holds:

$$\mathbb{E}_{\mathrm{unif}}\Big[\sum_{\pi^*} \mathbb{1}\{\pi^*(X_{1:G} = \pi(X_{1:G})\}\Big]$$

$$
\begin{aligned}
&= \Pr(G \le h)\mathbb{E}_{\text{unif}}\Big[\sum_{\pi^*} \mathbb{1}\{\pi^*(X_{1:G} = \pi(X_{1:G})\} \ \mid G \le h\Big] \\
&\quad + \Pr(G > h)\mathbb{E}_{\text{unif}}\Big[\sum_{\pi^*} \mathbb{1}\{\pi^*(X_{1:G} = \pi(X_{1:G})\} \ \mid G > h\Big] \\
&\le |\Pi| \Pr(G \le h) + \mathbb{E}_{\text{unif}}\Big[\sum_{\pi^*} \mathbb{1}\{\pi^*(X_{1:h} = \pi(X_{1:h})\}\Big] \\
&\le |\Pi| h^{d-1} \prod_{i=1}^{d-1} p_i + \mathbb{E}_{\text{unif}}\Big[\sum_{\pi^*} \mathbb{1}\{\pi^*(X_{1:h} = \pi(X_{1:h})\}\Big] \ ,
\end{aligned}
$$

where the last inequality applies Lemma 77. Note that by the construction of Π, there can only be one policy in Π which agrees with π on more than $\frac{7}{8}N$ observations in $\mathcal{X}$. With all other policies, π has to disagree on at least $1/8$ fraction of all possible observations. To see this, assume that there were two policies $\pi_1 \neq \pi_2$ in Π for which $\|\pi - \pi_i\| < N/8$. Then by triangle inequality $\|\pi_1 - \pi_2\| < N/4$ which contradicts the construction of Π. Thus, we can further bound the quantity of interest as

$$
\begin{aligned}
\mathbb{E}_{\text{unif}}\Big[\sum_{\pi^*} \mathbb{1}\{\pi^*(X_{1:G} = \pi(X_{1:G})\}\Big] &\le |\Pi| h^{d-1} \prod_{i=1}^{d-1} p_i + 1 + (|\Pi| - 1)\Big(\frac{7}{8}\Big)^h \\
&\le |\Pi| h^{d-1} \prod_{i=1}^{d-1} p_i + 1 + |\Pi| \exp(-h \log(8/7)) \ .
\end{aligned} \tag{8.43}
$$

We now set $h = \frac{\log |\Pi|}{\log(8/7)}$ which gives

$$
\mathbb{E}_{\text{unif}}\Big[\sum_{\pi^*} \mathbb{1}\{\pi^*(X_{1:G} = \pi(X_{1:G})\}\Big] \le 2 + |\Pi| \prod_{i=1}^{d-1} \Big(p_i \frac{\log |\Pi|}{\log(8/7)}\Big) \ . \tag{8.44}
$$

□

Lemma 76. *Let the progression probabilities $p_i = p$ for all $i \in [d-1]$ where $p \in (0,1)$. The time step G within the episode at which a goal step is reached satisfies*

$$
\Pr(G \le h) \le (h - d + 1)\Big(\frac{2peh}{d}\Big)^{d-1}.
$$

Proof. For $G = i$, there must be exactly $d-1$ progressions in the $i-1$ previous time steps, each happening with probability p. Therefore

$$\Pr(G = i) = \binom{i-1}{d-1} p^{d-1}(1-p)^{i-d}.$$

Thus,

$$\begin{aligned}
\Pr(G \leq h) &= \sum_{i=d}^{h} \Pr(G = i) = \sum_{i=d}^{h} \binom{i-1}{d-1} p^{d-1}(1-p)^{h-d} \\
&\leq \sum_{i=d}^{h} \binom{i-1}{d-1} p^{d-1} \leq \sum_{i=d}^{h} \Big(\frac{e(i-1)}{d-1}\Big)^{d-1} p^{d-1}, \\
&\leq (h-d+1)\Big(\frac{2peh}{d}\Big)^{d-1},
\end{aligned}$$

where the first inequality in the above is given by ignoring terms smaller than one, and the second inequality is due to the fact that any n, k, we have $\binom{n}{k} \leq (en/k)^k$ for $0 \leq k \leq n$. □

Lemma 77. *Let the probability for progressions be $p_1, \ldots, p_{d-1}$. The time step G within the episode at which a goal step is reached then satisfies*

$$\Pr(G \leq h) \leq h^{d-1} \prod_{i=1}^{d-1} p_i$$

Proof. For the event $G \leq h$ to happen, there must have been a progression in each of the $d-1$ states within h trials. Therefore

$$\Pr(G \leq h) \leq \prod_{i=1}^{d-1} (1 - (1-p_i)^{h-1}) \leq \prod_{i=1}^{d-1} ((h-1)p_i) \leq \prod_{i=1}^{d-1} (hp_i) \ .$$

□

CHAPTER 9

EXPLORATION-BY-OPTIMIZATION FOR INTERACTIVE DECISION MAKING

To reliably deploy data-driven decision making methods in real-world systems where safety is critical, such methods should satisfy two desiderata: (i) provable robustness in the face of dynamic or even adversarial environments, and (ii) ability to effectively take advantage of problem structure as modeled by the practitioner. In high-dimensional problems, this entails efficiently generalizing across states and actions while delicately exploring new decisions.

For decision making in static, stochastic environments, recent years have seen extensive investigation into optimal sample complexity and algorithm design principles, and the foundations are beginning to take shape. With an emphasis on reinforcement learning, a burgeoning body of research identifies specific modeling assumptions under which sample-efficient interactive decision making is possible (Dean et al., 2020; Yang and Wang, 2019; Jin et al., 2020; Modi et al., 2020; Ayoub et al., 2020; Krishnamurthy et al., 2016; Du et al., 2019a; Li, 2009; Dong et al., 2019; Zhou et al., 2021), as well as general structural conditions that aim to unify these assumptions (Russo and Van Roy, 2013; Jiang et al., 2017; Sun et al., 2019; Wang et al., 2020b; Du et al., 2021; Jin et al., 2021; Foster et al., 2021). For dynamic or adversarial settings, however, comparatively little is known outside of (i) positive results for special cases such as adversarial bandit problems (Auer et al., 2002; Audibert and Bubeck, 2009; Hazan and Kale, 2011; Dani et al., 2007; Abernethy et al., 2008; Bubeck et al., 2012; Kleinberg, 2004; Flaxman et al., 2005; Bubeck et al., 2017; Lattimore, 2020), and (ii) a handful of negative results suggesting that online reinforcement learning in agnostic or adversarial settings can actually

be statistically intractable (Sekhari et al., 2021b; Liu et al., 2022). These developments raise the following questions: (a) what are the underlying phenomena that govern the statistical complexity of decision making in adversarial settings? (b) what are the corresponding algorithmic design principles that attain optimal statistical complexity?

In this chapter, we consider an adversarial variant of the *Decision Making with Structured Observations* (DMSO) framework introduced in Foster et al. (2021), where a learner or decision-maker interacts with a sequence of *models* (reward distributions in the case of bandits, or MDPs in the case of reinforcement learning) chosen by an adaptive adversary, and aims to minimize regret against the best decision in hindsight. Models are assumed to belong to a known *model class*, which reflects the learner's prior knowledge about the problem. The main question we investigate is:

How does the structure of the model class determine the minimax regret for adversarial decision making, and what are the optimal algorithms that attain the minimax regret?

Our main contribution in this chapter is to show that the minimax regret for any problem in the DMSO Framework is characterized by the *convexified* version of the *Decision-Estimation Coefficient* (DEC), a complexity measure introduced by Foster et al. (2021). We also provide an algorithm that achieve this minimax regret bound based of on the *exploration-by-optimization* principle of **?**.

We refer the reader to Section 7.1.2 for a detailed introduction to the DMSO framework.

We next present our results on bounding regret in DMSO problems. First, using a new high-probability variant of the Exploration-by-Optimization technique (Lattimore and Szepesvári, 2020b; Lattimore and György, 2021), we provide an upper bound on regret based on the (convexified) Decision-Estimation Coefficient (Section 9.2). Next, we present a lower bound that scales with a localized version of the same quantity (Section 9.3). Finally, we use these results to give a characterization for learnability (Section 9.4), and discuss the gap between stochastic and adversarial decision making.

9.1 Overview of results

For a model class $\mathcal{M}$, reference model $\overline{M} \in \mathcal{M}$, and scale parameter $\gamma > 0$, the Decision-Estimation Coefficient (Foster et al., 2021) is defined via

$$\mathsf{dec}_\gamma(\mathcal{M}, \overline{M}) = \inf_{p \in \Delta(\Pi)} \sup_{M \in \mathcal{M}} \mathbb{E}_{\pi \sim p}\big[f^M(\pi_M) - f^M(\pi) - \gamma \cdot D^2_{\mathsf{H}}\big(M(\pi), \overline{M}(\pi)\big)\big], \quad (9.1)$$

where we recall that for probability measures $\mathbb{P}$ and $\mathbb{Q}$ with a common dominating measure ν, (squared) Hellinger distance is given by

$$D^2_{\mathsf{H}}(\mathbb{P}, \mathbb{Q}) = \int \left(\sqrt{\frac{d\mathbb{P}}{d\nu}} - \sqrt{\frac{d\mathbb{Q}}{d\nu}} \right)^2. \quad (9.2)$$

We define $\mathsf{dec}_\gamma(\mathcal{M}) = \sup_{\overline{M} \in \mathcal{M}} \mathsf{dec}_\gamma(\mathcal{M}, \overline{M})$, and let $\mathrm{co}(\mathcal{M})$ denote the convex hull of $\mathcal{M}$, which can be viewed as the set of all mixtures of models in $\mathcal{M}$. Our main results show that the *convexified Decision-Estimation Coefficient*,

$$\mathsf{dec}_\gamma(\mathrm{co}(\mathcal{M})),$$

leads to upper and lower bounds on the optimal regret for adversarial decision making.

Theorem (informal). *For any model class $\mathcal{M}$, Algorithm 7 ensures that with high probability,*

$$\mathbf{Reg}_{\mathsf{DM}} \lesssim \mathsf{dec}_{\gamma}(\mathrm{co}(\mathcal{M})) \cdot T, \tag{9.3}$$

where γ satisfies the balance $\mathsf{dec}_{\gamma}(\mathrm{co}(\mathcal{M})) \propto \frac{\gamma}{T} \log|\Pi|$. Moreover, for any algorithm with "reasonable" tail behavior (Section 9.3), regret must scale with a localized version of the same quantity.

As a consequence, there exists an algorithm for which $\mathbb{E}[\mathbf{Reg}_{\mathsf{DM}}] \leq \tilde{o}(T)$ if and only if $\mathsf{dec}_{\gamma}(\mathrm{co}(\mathcal{M})) \propto \gamma^{-\rho}$ for some $\rho > 0$.

For the stochastic version of our setting, Foster et al. (2021) give upper and lower bounds that scale with $\mathsf{dec}_{\gamma}(\mathcal{M})$, without convexifying (under appropriate technical assumptions; cf. Section 9.4). Hence, our results show that in general, the gap in optimal regret for stochastic and adversarial decision making (or, "price of adversarial outcomes") is governed by the behavior of the DEC under convexification. For example, multi-armed bandits, linear bandits, and convex bandits correspond to convex model classes (where $\mathrm{co}(\mathcal{M}) = \mathcal{M}$), which gives a post-hoc explanation for why these problems are tractable in the adversarial setting. Finite state/action Markov decision processes do not correspond to a convex model class, and have $\mathsf{dec}_{\gamma}(\mathrm{co}(\mathcal{M}))$ exponentially large compared to $\mathsf{dec}_{\gamma}(\mathcal{M})$; in this case, our results recover lower bounds of Liu et al. (2022).

Our techniques. On the lower bound side, we strengthen the approach from Foster et al. (2021) with an improved change-of-measure argument (leading to improved results even in the stochastic setting), and combine this with the simple idea of constructing adversaries based on static mixture models. On the upper bound

side, we extend the powerful Exploration-by-Optimization machinery of Lattimore and György (2021) to the DMSO setting, and give a novel high-probability variant of the technique which leads to regret bounds for adaptive adversaries. We show that the performance of this method is controlled by a complexity measure whose value is equivalent to the convexified DEC, as well as parameterized variant of the Information Ratio (we present results in terms of the former to draw comparison to the stochastic setting).

Overall, our results heavily draw on the work of Foster et al. (2021) and Lattimore and György (2021), but we believe they play a valuable role in bridging these lines of research and formalizing connections. To keep presentation as simple as possible, we make the following assumption.

Assumption 10. The decision space Π has $|\Pi| < \infty$, and we have $\mathcal{R} = [0, 1]$.

This assumption only serves to facilitate the use of the minimax theorem, and we expect that our results can be generalized (e.g., with covering numbers as in Section 3.4 of Foster et al. (2021)).

9.2 Upper Bound

We give regret bounds for adversarial decision making based on the (convexified) Decision-Estimation Coefficient. A-priori, it is not obvious why the DEC should bear any relevance to the adversarial setting we consider: The algorithms and regret bounds based on the DEC that Foster et al. (2021) introduce for the stochastic setting heavily rely on the ability to estimate a static underlying model, yet in the adversarial setting, the learner may only interact with each model a single time.

This renders any sort of global estimation (e.g., for dynamics of an MDP) impossible. In spite of this difficulty, we show that regret bounds can be achieved by building on the *Exploration-by-Optimization* technique of Lattimore and Szepesvári (2020b); Lattimore and György (2021), which provides an elegant approach to estimating rewards that exploits the structure of the model class under consideration.

Exploration-by-Optimization—introduced by Lattimore and Szepesvári (2020b) and substantially expanded in Lattimore and György (2021)—can be thought of as a generalization of the classical EXP3 algorithm (Auer et al., 2002) for finite-action bandits, which applies the exponential weights method for full-information online learning to a sequence of unbiased importance-weighted estimators for rewards. While EXP3 is near-optimal for bandits, it is unsuitable for general model classes because the reward estimators the algorithm uses do not exploit the structure of the decision space. Consequently, the regret scales linearly with $|\Pi|$ rather than with, e.g., dimension, as one might hope for problems like linear bandits. The idea behind Exploration-by-Optimization is to solve an optimization problem at each round to search for a (potentially biased) reward estimator and modified sampling distribution that better exploit the structure of the model class $\mathcal{M}$, leading to information sharing and improved regret. Lattimore and György (2021) showed that for a general partial monitoring setting (cf. Section 9.6), the expected regret for this method—and for more general family of algorithms based on Bregman divergences—is bounded by a generalization of the Information Ratio of Russo and Van Roy (2014, 2018).

Our development builds on that of Lattimore and György (2021), but we pursue *high-probability* guarantees rather than in-expectation guarantees. This allows us to provide regret bounds that hold for *adaptive adversaries*, rather than oblivi-

Algorithm 7 High-Probability Exploration-by-Optimization (ExO$^+$)

1: **parameters**: Learning rate $\eta > 0$.
2: **for** $t = 1, 2, \cdots, T$ **do**
3: Define $q^{(t)} \in \Delta(\Pi)$ via exponential weights update:

$$q^{(t)}(\pi) = \frac{\exp\left(\eta \sum_{i=1}^{t-1} \widehat{f}^{(i)}(\pi)\right)}{\sum_{\pi' \in \Pi} \exp\left(\eta \sum_{i=1}^{t-1} \widehat{f}^{(i)}(\pi')\right)}. \tag{9.4}$$

4: Solve *high-probability exploration-by-optimization* objective: `//See Eq. (??)`

$$(p^{(t)}, g^{(t)}) \leftarrow \operatorname*{argmin}_{p \in \Delta(\Pi), g \in \mathcal{G}} \sup_{M \in \mathcal{M}, \pi^\star \in \Pi} \Gamma_{q^{(t)}, \eta}(p, g\,; \pi^\star, M). \tag{9.5}$$

5: Sample decision $\pi^{(t)} \sim p^{(t)}$ and observe $z^{(t)} = (r^{(t)}, o^{(t)})$.
6: Form reward estimator:

$$\widehat{f}^{(t)}(\pi) = \frac{g^{(t)}(\pi; \pi^{(t)}, z^{(t)})}{p^{(t)}(\pi^{(t)})}. \tag{9.6}$$

ous adversaries as considered in prior work.[1] Beyond this basic motivation, our interest in high-probability guarantees comes from the lower bound in the sequel (Section 9.3), which shows that the convexified Decision-Estimation Coefficient lower bounds regret for algorithms with "reasonable" tail behavior. To develop high-probability regret bounds and complement this lower bound, we use a novel variant of the Exploration-by-Optimization objective and a specialized analysis that goes beyond the Bregman divergence framework.

Our algorithm, ExO$^+$, is displayed in Algorithm 7. At each round t, the algorithm computes a *reference distribution* $q^{(t)} \in \Delta(\Pi)$ by applying the standard exponential weights update (with learning rate $\eta > 0$) to a sequence of reward estimators $\widehat{f}^{(1)}, \ldots, \widehat{f}^{(t-1)}$ from previous rounds (Line 3). For the main step (Line 4), the algorithm obtains a *sampling distribution* $p^{(t)} \in \Delta(\Pi)$ and an *estimation function*

[1] In general, in-expectation regret bounds do not imply high-probability bounds. For example, in adversarial bandits, the EXP3 algorithm can experience linear regret with constant probability (Lattimore and Szepesvári, 2020a).

$g^{(t)} \in \mathcal{G} := (\Pi \times \Pi \times \mathcal{Z} \to \mathbb{R})$ by solving a minimax optimization problem based on a new objective we term *high-probability exploration-by-optmization*: Defining

$$\Gamma_{q,\eta}(p, g\,; \pi^\star, M) := \mathbb{E}_{\pi\sim p}[f^M(\pi^\star) - f^M(\pi)] + \frac{1}{\eta} \cdot \mathbb{E}_{\pi\sim p, z\sim M(\pi)} \mathbb{E}_{\pi'\sim q}\left[\exp\left(\frac{\eta}{p(\pi)}(g(\pi'; \pi, z) - g(\pi^\star; \pi, z))\right) - 1\right],$$

we solve

$$(p^{(t)}, g^{(t)}) \leftarrow \operatorname*{argmin}_{p\in\Delta(\Pi), g\in\mathcal{G}} \sup_{M\in\mathcal{M}, \pi^\star\in\Pi} \Gamma_{q^{(t)},\eta}(p, g\,; \pi^\star, M). \tag{9.7}$$

Finally (Line **??**estimator:), given $p^{(t)}$ and $g^{(t)}$, the algorithm samples $\pi^{(t)} \sim p^{(t)}$, observes $z^{(t)} = (r^{(t)}, o^{(t)})$, and then forms an importance-weighted reward estimator via $\widehat{f}^{(t)}(\pi) := g^{(t)}(\pi; \pi^{(t)}, z^{(t)})/p^{(t)}(\pi^{(t)})$.

The interpretation of the high-probability Exploration-by-Optimization objective (**??**) is as follows: For a given round t, the model $M \in \mathcal{M}$ and decision $\pi^\star \in \Pi$ should be thought of as a proxy for the true model $M^{(t)}$ and optimal decision, respectively. By solving the minimax problem in (9.7), the min-player aims to—in the face of an unknown, worst-case model—find a sampling distribution that minimizes instantaneous regret, yet ensures good tail behavior for the importance-weighted estimator $g(\cdot; \pi, z)/p(\pi)$. Tail behavior is captured by the moment generating function-like term in (**??**), which penalizes the learner for over-estimating rewards under the reference distribution q or under-estimating rewards under $\pi^\star$.

We show that this approach leads to a bound on regret that scales with the convexified DEC.

Theorem 42 (Main upper bound)**.** *For any choice of $\eta > 0$, Algorithm 7 ensures that for all $\delta > 0$, with probability at least $1 - \delta$,*

$$\mathbf{Reg}_{\mathsf{DM}} \leq \mathsf{dec}_{1/8\eta}(\mathrm{co}(\mathcal{M})) \cdot T + \frac{2}{\eta} \cdot \log(|\Pi|/\delta). \tag{9.8}$$

In particular, for any $\delta > 0$, with appropriate η, the algorithm ensures that with probability at least $1 - \delta$,

$$\mathbf{Reg}_{\mathsf{DM}} \leq O(1) \cdot \inf_{\gamma > 0} \{ \mathsf{dec}_{\gamma}(\mathrm{co}(\mathcal{M})) \cdot T + \gamma \cdot \log(|\Pi|/\delta) \}. \tag{9.9}$$

This regret bound holds for arbitrary, potentially adaptive adversaries. The result should be compared to the upper bound for the stochastic setting in Foster et al. (2021) (e.g., Theorem 3.3), which takes a similar form, but scales with the weaker quantity $\sup_{\overline{M} \in \mathrm{co}(\mathcal{M})} \mathsf{dec}_{\gamma}(\mathcal{M}, \overline{M})$.[2] See Section 9.6 for comparison to Lattimore and Szepesvári (2020b); Lattimore and György (2021).

Equivalence of Exploration-by-Optimization and Decision-Estimation Coefficient. We now discuss a deeper connection between Exploration-by-Optimization and the DEC. Define the minimax value of the high-probability Exploration-by-Optimization objective via

$$\mathsf{exo}_{\eta}(\mathcal{M}, q) := \inf_{p \in \Delta(\Pi), g \in \mathcal{G}} \sup_{M \in \mathcal{M}, \pi^{\star} \in \Pi} \Gamma_{q,\eta}(p, g\,; \pi^{\star}, M), \tag{9.10}$$

and let $\mathsf{exo}_{\eta}(\mathcal{M}) := \sup_{q \in \Delta(\Pi)} \mathsf{exo}_{\eta}(\mathcal{M}, q)$. This quantity can be interpreted as a complexity measure for $\mathcal{M}$ whose, value reflects the difficulty of exploration. The following structural result (Theorem **??** in Section **??**), which is critical to the proof of Theorem 42, shows that this complexity measure is equivalent to the convexified Decision-Estimation Coefficient:

$$\mathsf{dec}_{(4\eta)^{-1}}(\mathrm{co}(\mathcal{M})) \leq \mathsf{exo}_{\eta}(\mathcal{M}) \leq \mathsf{dec}_{(8\eta)^{-1}}(\mathrm{co}(\mathcal{M})), \quad \forall \eta > 0. \tag{9.11}$$

As we show, the regret of Algorithm 7 is controlled by the value of $\mathsf{exo}_{\eta}(\mathcal{M})$, and thus Theorem 42 follows. In the process of proving (9.11), we also establish equivalence of the Exploration-by-Optimization objective and a *parameterized* version

[2] If a proper estimation algorithm (i.e., an algorithm producing estimators that lie in $\mathcal{M}$) is available, Foster et al. (2021) (Theorem 4.1) gives tighter bounds scaling with $\mathsf{dec}_{\gamma}(\mathcal{M})$.

of the Information Ratio, which is of independent interest (cf. Section **??**). Both results build on, but go beyond the Bregman divergence-based framework in Lattimore and György (2021), and exploit a somewhat obscure connection between Hellinger distance and the moment generating function (MGF) for the logarithmic loss. In particular, we use a technical lemma (proven in Section 9.8.2), which shows that up to constants, the Hellinger distance between two probability distributions can be expressed as variational problem based on the associated MGFs.

Lemma 78. *Let $\mathbb{P}$ and $\mathbb{Q}$ be probability distributions over a measurable space $(\mathcal{X}, \mathscr{F})$. Then*

$$\frac{1}{2} D_{\mathsf{H}}^2(\mathbb{P}, \mathbb{Q}) \leq \sup_{g:\mathcal{X}\to\mathbb{R}} \left\{1 - \mathbb{E}_{\mathbb{P}}\left[e^{g}\right] \cdot \mathbb{E}_{\mathbb{Q}}\left[e^{-g}\right]\right\} \leq D_{\mathsf{H}}^2(\mathbb{P}, \mathbb{Q}). \tag{9.12}$$

The lower inequality in Lemma 78 is proven using a trick similar to one used by Zhang (2006) to prove high-probability bounds for maximum likelihood estimation based on Hellinger distance. To prove the upper bound in (9.11), we apply the lower inequality in (9.12) with the test function g taking the role of the estimation function in the Exploration-by-Optimization objective.

Computational efficiency. The main focus of this work is statistical complexity (in particular, minimax regret), and the runtime and memory requirements of Algorithm 7, which are linear in $|\Pi|$, are not practical for large decision spaces. Improving the computational efficiency is an interesting question for future work. We mention in passing that Theorem 42 answers a question raised by Foster et al. (2021) of obtaining in the frequentist setting a regret bound matching the Bayesian regret bound in their Theorem 3.6.

9.3 Lower Bound

We now complement the regret bound in the prequel with a matching lower bound based on the convexified DEC. To state the result, we define the *localized model class* around a model $\overline{M}$ via

$$\mathcal{M}_\varepsilon(\overline{M}) = \left\{M \in \mathcal{M} : f^{\overline{M}}(\pi_{\overline{M}}) \geq f^M(\pi_M) - \varepsilon\right\},$$

and define $\mathsf{dec}_{\gamma,\varepsilon}(\mathcal{M}) := \sup_{\overline{M}\in\mathcal{M}} \mathsf{dec}_\gamma(\mathcal{M}_\varepsilon(\overline{M}), \overline{M})$ as the *localized Decision-Estimation Coefficient.* We let $(x)_+ := \max\{x, 0\}$ and define $V(\mathcal{M}) := \sup_{M,M'\in\mathcal{M}} \sup_{\pi\in\Pi} \sup_{A\in\mathscr{R}\otimes\mathscr{O}} \left\{\frac{M(A|\pi)}{M'(A|\pi)}\right\} \vee e$;[3] finiteness of $V(\mathcal{M})$ is not necessary, but removes a $\log(T)$ factor from Theorem 43.

Theorem 43 (Main lower bound)**.** *Consider a model class $\mathcal{M}$ with $\mathcal{F}_\mathcal{M} \subseteq (\Pi \mapsto [0,1])$, and let $\delta \in (0,1)$ and $T \in \mathbb{N}$ be fixed. Define $C(T) := c\cdot\log(T\wedge V(\mathcal{M}))$ for a sufficiently large numerical constant $c > 0$ and $\epsilon_\gamma := C(T)^{-1}\frac{\gamma}{T}$. Then, for any algorithm, there exists a model in $\mathcal{M}$ for which*

$$\mathbb{E}[\mathbf{Reg}_{\mathsf{DM}}] \succcurlyeq \frac{1}{C(T)} \cdot \sup_{\gamma > \sqrt{C(T)T}} \left\{(\mathsf{dec}_{\gamma,\varepsilon_\gamma}(\mathrm{co}(\mathcal{M})) - 15\gamma)\cdot T, \gamma\right\} \tag{9.13}$$

The proof of Theorem 43 follows identical to the proof of (Foster et al., 2021, Theorem 3.1) by noting that the adversarial setting includes stochastic environments that samples a model from a fixed distribution in $\Delta(\mathcal{M})$ at every iteration. Hence, $\mathsf{dec}_{\gamma,\varepsilon_\gamma}(\mathcal{M})$ appearing in (Foster et al., 2021, Theorem 3.1) is replaced by $\mathsf{dec}_{\gamma,\varepsilon_\gamma}(\mathrm{co}(\mathcal{M}))$ in Theorem 43, where the convex hull accounts for distributions over $\mathcal{M}$.

As an example, we show in Section 9.8.5 that for the multi-armed bandit problem with $\Pi = \{1, \ldots, A\}$, our upper bound in Theorem 42 yields $R = \widetilde{O}(\sqrt{AT\log A})$,

[3] Recall (Section 9.8.1) that $M(\cdot, \cdot \mid \pi)$ is the conditional distribution given π.

while the lower bound in Theorem 43 yields $R = \Omega(\sqrt{AT})$. See Section 9.8.5 for additional examples which further illustrate the scaling in the upper and lower bounds.

The dependence on $\log|\Pi|$ cannot be removed from the upper bound or made to appear in the lower bound in general (cf. Section 3.5 of Foster et al. (2021)). As shown in Foster et al. (2021), localization is inconsequential for most model classes commonly studied in the literature. The same is true for the examples we consider here (Section 9.8.5), where Theorem 43 leads to the correct rate up to small polynomial factors. However, improving the upper bound to achieve localization, which Foster et al. (2021) show is possible in the stochastic setting, is an interesting future direction.

Why convexity? At this point, a natural question is *why* the convex hull $\mathrm{co}(\mathcal{M})$ plays a fundamental role in the adversarial setting. For the lower bound, the intuition is simple: Given a model class $\mathcal{M}$, the adversary can pick any mixture distribution $\mu \in \Delta(\mathcal{M})$, then choose the sequence of models $M^{(1)}, \ldots, M^{(T)}$ by sampling $M^{(t)} \sim \mu$ independently at each round. This is equivalent to playing a static mixture model $M^\star = \mathbb{E}_{M\sim\mu}[M] \in \mathrm{co}(\mathcal{M})$, which is what allows us to prove a lower bound based on the DEC for the set $\mathrm{co}(\mathcal{M})$ of all such models. In view of the fact that the lower bound is obtained through this static (and stochastic) adversary, we believe the more surprising result here is that good behavior of the convexified DEC is also *sufficient* for low regret for fully adversarial decision making.

9.4 Learnability and Comparison to Stochastic Setting

Building on the upper and lower bounds in the prequel, we give a characterization for *learnability* (i.e., when non-trivial regret is possible) for adversarial decision making. This extends the learnability characterization for the stochastic setting in Foster et al. (2021), and follows a long tradition in learning theory (Vapnik, 1995; Alon et al., 1997; Shalev-Shwartz et al., 2010; Rakhlin et al., 2010; Daniely et al., 2011). To state the result, we define the minimax regret for model class $\mathcal{M}$ as

$$\mathfrak{M}(\mathcal{M}, T) = \inf_{\boldsymbol{p}^{(1)},\ldots,\boldsymbol{p}^{(T)}} \sup_{\boldsymbol{M}^{(1)},\ldots,\boldsymbol{M}^{(T)}} \mathbb{E}[\mathbf{Reg}_{\mathsf{DM}}],$$

where $\boldsymbol{p}^{(t)} : (\Pi \times \mathcal{Z})^{t-1} \to \Delta(\Pi)$ and $\boldsymbol{M}^{(t)} : (\Pi \times \mathcal{Z})^{t-1} \to \mathcal{M}$ are policies for the learner and adversary, respectively. Our characterization is as follows.

Theorem 44. *Suppose there exists $M_0 \in \mathcal{M}$ such that f^{M_0} is a constant function, and that $|\Pi| < \infty$.*

1. *If there exists $\rho > 0$ such that $\lim_{\gamma\to\infty} \mathsf{dec}_\gamma(\mathrm{co}(\mathcal{M})) \cdot \gamma^\rho = 0$, then $\lim_{T\to\infty} \frac{\mathfrak{M}(\mathcal{M},T)}{T^p} = 0$ for some $p < 1$.*
2. *If $\lim_{\gamma\to\infty} \mathsf{dec}_\gamma(\mathrm{co}(\mathcal{M})) \cdot \gamma^\rho > 0$ for all $\rho > 0$, then $\lim_{T\to\infty} \frac{\mathfrak{M}(\mathcal{M},T)}{T^p} = \infty$ for all $p < 1$.*

In addition, the same conclusion holds when $\Pi = \Pi_T$ grows with T, but has $\log|\Pi_T| = O(T^q)$ for any $q < 1$.[4]

Theorem 44 shows that polynomial decay of the convexified DEC is necessary and sufficient for low regret. We emphasize that this result is complementary

[4] Allowing Π to grow with T is useful when considering infinite decision spaces, because it facilitates covering arguments.

to Theorem 43, and does not require localization or any assumption on the tail behavior of the algorithm. This is a consequence of the coarse, asymptotic nature of the result, which allows us the use of rescaling arguments to remove these conditions.

Comparison to stochastic setting. Having shown that the convexified Decision-Estimation Coefficient leads to upper and lower bounds on the optimal regret for the adversarial DMSO setting, we now contrast with the stochastic setting. There, Foster et al. (2021) obtain upper bounds on regret that have the same form as (9.9), but scale with the weaker quantity $\max_{\overline{M}\in\mathrm{co}(\mathcal{M})} \mathsf{dec}_\gamma(\mathcal{M}, \overline{M})$.[5] For classes that are not convex, but where "proper" estimators are available (including finite-state/action MDPs), the upper bounds in Foster et al. (2021) can further be improved to scale with $\mathsf{dec}_\gamma(\mathcal{M})$. Hence, our results show that in general, the price of adversarial outcomes can be as large as $\mathsf{dec}_\gamma(\mathrm{co}(\mathcal{M}))/\mathsf{dec}_\gamma(\mathcal{M})$. Examples include:

- For tabular (finite-state/action) MDPs with horizon H, S states, and A actions, Foster et al. (2021) show that $\mathsf{dec}_\gamma(\mathcal{M}) \leq \mathrm{poly}(H, S, A)/\gamma$, and use this to obtain regret $\sqrt{\mathrm{poly}(H, S, A) \cdot T}$. Tabular MDPs are *not* a convex class, and $\mathrm{co}(\mathcal{M})$ is equivalent to the class of so-called *latent MDPs*, which are known to be intractable (Kwon et al., 2021; Liu et al., 2022). Indeed, we show (Section 9.8.5) that $\mathsf{dec}_\gamma(\mathrm{co}(\mathcal{M})) \geq \Omega(A^{\min\{S,H\}})$, which implies an exponential lower bound on regret through Theorem 43. This highlights that in general, the gap between stochastic and adversarial outcomes can be quite large.

[5] Theorem 3.1 of Foster et al. (2021) attains $\mathbf{Reg}_{\mathsf{DM}} \lesssim \inf_{\gamma>0}\{\max_{\overline{M}\in\mathrm{co}(\mathcal{M})} \mathsf{dec}_\gamma(\mathcal{M}, \overline{M}) + \gamma \cdot \log|\mathcal{M}|\}$ with high probability.

- For many common bandit problems, one has $\mathrm{co}(\mathcal{M}) = \mathcal{M}$, leading to polynomial bounds on regret in the adversarial setting. For example, the multi-armed bandit problem with A actions has $\mathsf{dec}_\gamma(\mathrm{co}(\mathcal{M})) \leq O(A/\gamma)$, leading to $\sqrt{AT \log A}$ regret (via Theorem 42), and the linear bandit problem in d dimensions has $\mathsf{dec}_\gamma(\mathrm{co}(\mathcal{M})) \leq O(d/\gamma)$, leading to regret $\sqrt{dT \log|\Pi|}$.

We refer to Section 9.8.5 for further details and examples.

9.5 Examples

In this section, we instantiate our upper bounds for basic examples of interest.

9.5.1 Structured Bandits

We first consider adversarial (structured) bandit problems, which correspond to the special case of the adversarial DMSO setting in which there are no observations (i.e., $\mathcal{O} = \{\varnothing\}$). We consider three examples: finite-armed bandits, linear bandits, and convex bandits. For each example, we take $\mathcal{R} = [0, 1]$, fix a *reward function class* $\mathcal{F} \subseteq (\Pi \to [0, 1])$, and take $\mathcal{M}_{\mathcal{F}} = \{M \mid f^M \in \mathcal{F}\}$ to be the induced model class. The class $\mathcal{M}_{\mathcal{F}}$ should be thought of as the set of all reward distributions over $[0, 1]$ with mean rewards in $\mathcal{F}$.

Example 3 (Finite-armed bandit)**.** In the finite-armed bandit problem, we take $\Pi = \{1, \ldots, A\}$ as the decision space for $A \in \mathbb{N}$, let $\mathcal{F} = [0, 1]^A$, and take $\mathcal{M} = \mathcal{M}_{\mathcal{F}}$ as the induced model class. For this setting, whenever $A \geq 2$, it holds that

$$\mathsf{dec}_\gamma(\mathrm{co}(\mathcal{M})) \leq \frac{A}{\gamma} \quad \forall \gamma > 0, \quad \text{and} \quad \mathsf{dec}_{\gamma,\varepsilon_\gamma}(\mathrm{co}(\mathcal{M})) \geq 2^{-6} \cdot \frac{A}{\gamma} \quad \forall \gamma \geq \frac{A}{3}, \tag{9.14}$$

where $\varepsilon_\gamma = \frac{A}{12\gamma}$.

This result follows from Foster et al. (2021, Proposition 5.2 and 5.3), noting that $\mathrm{co}(\mathcal{M}) = \mathcal{M}$. Plugging (9.14) into Theorem 42 yields a $O(\sqrt{AT \log A})$ upper bound on regret, and plugging into Theorem 43 gives a $\widetilde{\Omega}(\sqrt{AT})$ lower bound for sub-Chebychev algorithms.[6]

Example 4 (Linear bandit)**.** In the linear bandit problem, we have $\Pi \subseteq \mathbb{R}^d$ and

$$\mathcal{F} = \{f : \Pi \to [0,1] \mid f \text{ is linear}\},$$

and take $\mathcal{M} = \mathcal{M}_{\mathcal{F}}$ as the induced model class. For this setting, it holds that[7]

$$\mathsf{dec}_\gamma(\mathrm{co}(\mathcal{M})) \leq \frac{d}{4\gamma} \quad \forall \gamma > 0, \quad \text{and} \quad \mathsf{dec}_{\gamma,\varepsilon_\gamma}(\mathrm{co}(\mathcal{M})) \geq \frac{d}{12\gamma} \quad \forall \gamma \geq \frac{2d}{3}, \tag{9.15}$$

where $\varepsilon_\gamma := \frac{d}{3\gamma}$.

This result follows from Foster et al. (2021, Proposition 6.1 and 6.2), again noting that $\mathrm{co}(\mathcal{M}) = \mathcal{M}$. Plugging (9.14) into Theorem 42 yields a $O(\sqrt{dT \log |\Pi|})$ upper bound on regret, and plugging into Theorem 43 gives a $\widetilde{\Omega}(\sqrt{dT})$ lower bound for sub-Chebychev algorithms.

Example 5 (Convex bandit)**.** In the convex bandit problem, we have $\Pi \subseteq \mathbb{R}^d$ and

$$\mathcal{F} = \{f : \Pi \to [0,1] \mid f \text{ is convex}\},$$

and take $\mathcal{M} = \mathcal{M}_{\mathcal{F}}$ as the induced model class. For this setting, it holds that for all $\gamma > 0$,

$$\mathsf{dec}_\gamma(\mathrm{co}(\mathcal{M})) \leq O\left(\frac{d^4}{\gamma} \cdot \mathrm{polylog}(d, \mathrm{diam}(\Pi), \gamma)\right). \tag{9.16}$$

[6]For this example and Example 4, the lower bound on $\mathsf{dec}_{\gamma,\varepsilon_\gamma}(\mathrm{co}(\mathcal{M}))$ in Foster et al. (2021) is witnessed by a subfamily $\mathcal{M}' \subseteq \mathcal{M}$ with $V(\mathcal{M}') = O(1)$. As a result, we can take $C(T) = O(1)$ in Theorem 43.

[7]The upper bound here holds for all Π, while the lower bound holds for a specific choice for Π.

This result follows from Foster et al. (2021, Proposition 6.3) (which itself is a restatement of Lattimore and Szepesvári (2020a, Theorem 3)), and by noting once more that $\mathrm{co}(\mathcal{M}) = \mathcal{M}$.

Remark 6. *The adversarial bandit literature (Auer et al., 2002; Audibert and Bubeck, 2009; Hazan and Kale, 2011; Dani et al., 2007; Abernethy et al., 2008; Bubeck et al., 2012; Kleinberg, 2004; Flaxman et al., 2005; Bubeck et al., 2017; Lattimore, 2020; Kleinberg, 2004; Bubeck et al., 2011) typically considers a slightly different formulation in which the adversary selects a deterministic reward function. This can be captured by restricting $\mathcal{M}$ to deterministic models. It is clear that the upper bounds on $\mathsf{dec}_\gamma(\mathrm{co}(\mathcal{M}))$ in the examples above lead to upper bounds for this formulation. The lower bounds in Example* **??***linear: easily extend as well.*

9.5.2 Reinforcement Learning

We now consider an example in reinforcement learning. We begin by recalling how to view the episodic reinforcement learning problem in the DMSO framework.

Model class. For episodic reinforcement learning, we fix a *horizon* H and let the model class $\mathcal{M}$ consist of a set of non-stationary Markov Decision Processes (MDP). Each model $M \in \mathcal{M}$ is specified by

$$M = \big\{\{\mathcal{S}_h\}_{h=1}^{H+1}, \mathcal{A}, \{P_h^M\}_{h=1}^{H}, \{R_h^M\}_{h=1}^{H}, d_1\big\},$$

where $\mathcal{S}_h$ is the state space for layer h, $\mathcal{A}$ is the action space, $P_h^M : \mathcal{S}_h \times \mathcal{A} \mapsto \Delta(\mathcal{S}_{h+1})$ is the probability transition kernel for layer h, $R_h^M : \mathcal{S}_h \times \mathcal{A} \mapsto \Delta([0,1])$ is the reward distribution for layer h and $d_1 \in \Delta(\mathcal{S}_1)$ is the initial state distribution. This formulation allows the reward distribution and transition kernel to vary across

models in $\mathcal{M}$, but keeps the initial state distribution is fixed. We adopt the convention that $S_{H+1} = \{s_{H+1}\}$ where s_{H+1} is a deterministic terminal state.

For each episode, the learner selects a non-stationary policy $\pi = (\pi_1, \ldots, \pi_H)$, where $\pi_h : \mathcal{S}_h \mapsto \mathcal{A}$; we let Π_{NS} denote the set of all such policies. For a given MDP $M \in \mathcal{M}$, an episode proceeds by first sampling $s_1 \sim d_1$, then for $h = 1, \ldots, H$:

- $a_h = \pi_h(s_h)$.
- $r_h \sim R_h^M(s_h, a_h)$ and $s_{h+1} \sim P_h^M(\cdot \mid s_h, a_h)$.

The value of the policy π under M is given by $f^M(\pi) := \mathbb{E}^{M,\pi}\left[\sum_{h=1}^H r_h\right]$, where $\mathbb{E}^{M,\pi}[\cdot]$ denotes expectation under the process above.

Adversarial protocol. Within the adversarial DMSO framework, model classes above give rise to the following adversarial reinforcement learning protocol. At each time t, the learner plays selects a policy $\pi \in \Pi_{\mathrm{NS}}$ and the adversary chooses an MDP $M^{(t)} \in \mathcal{M}$. The policy $\pi^{(t)}$ is executed in $M^{(t)}$, resulting in a trajectory $\tau^{(t)} = (s_1^{(t)}, r_1^{(t)}, r_1^{(t)}), \ldots, (s_H^{(t)}, r_H^{(t)}, r_H^{(t)})$. The learner then observes feedback $(r^{(t)}, o^{(t)})$, where $r^{(t)} := \sum_{h=1}^H r_H^{(t)}$ is the cumulative reward for the episode, and $o^{(t)} = \tau^{(t)}$ is the trajectory.

With this setting in mind, we give our main example.

Example 6 (Tabular MDP)**.** Let $\mathcal{M}$ be the class of finite-state/action (tabular) MDPs with horizon H, $S \geq 2$ states, $A \geq 2$ actions, and $\sum_{h=1}^H r_h \in [0, 1]$. Then, for any $\gamma \geq A^{\min\{S-1,H\}}/6$,

$$\mathsf{dec}_{\gamma,\varepsilon_\gamma}(\mathrm{co}(\mathcal{M})) \geq \frac{A^{\min\{S-1,H\}}}{24\gamma},$$

where $\varepsilon_\gamma := A^{\min\{S-1,H\}}/24\gamma$.

Using this result with Theorem 43 leads to a lower bound on regret that scales with $\Omega(A^{\min S-1,H})$, which recovers existing intractability results for this setting (Kwon et al., 2021; Liu et al., 2022). Note that we have $\mathsf{dec}_\gamma(\mathcal{M}) = \mathrm{poly}(S, A, H)/\gamma$ for this setting (Foster et al., 2021), so this is a case where there is a large separation between stochastic and adversarial decision making.

We briefly mention that the set $\mathrm{co}(\mathcal{M})$ can be interpreted as the set of *latent MDPs* (Kwon et al., 2021), which is also known to be intractable. In the latent MDP problem, each model is a mixture of MDPs. At the beginning of each episode, the underlying MDP is drawn from the mixture (the identity is not observed), and the learner's policy is executed in this MDP for the duration of the episode.

9.6 Comparison to the prior work

Beyond Foster et al. (2021), which was the starting point for this work, our results build on a long line of research on partial monitoring and the Information Ratio Russo and Van Roy (2014, 2018); Lattimore and Szepesvári (2019); Lattimore (2020, 2021); Lattimore and György (2021); Lattimore (2022); Kirschner (2021); Kirschner et al. (2020, 2021); most closely related are the works the works of Lattimore and György (2021) and Lattimore (2022). Below we discuss and compare to these results in greater detail.

Comparison to partial monitoring setting. Lattimore and György (2021); Lattimore (2022) and other works in this sequence consider a general partial mon-

itoring setting in which each outcome $z^{(t)}$ is directly chosen by an adversary, and needs not contain the reward signal. In terms of reward signal, our setting is more restrictive because we assume that $r^{(t)}$ is observed. In fact, our upper bounds encompass the more general setting where rewards are not observed by the learner (thus subsuming the partial monitoring problem) but our lower bounds that require that rewards are observed. In terms of data generation process, our setting is more general because we restrict to models in a known class in $\mathcal{M}$. This setup recovers the case where $z^{(t)}$ is fully adversarial because by considering the special case where $\mathcal{M}$ consists of point masses over $\mathcal{Z}$. However, our framework also allows for semi-stochastic adversaries, and for problems like (structured) adversarial MDPs. For example, if we constrain all models in $\mathcal{M}$ place ε probability mass on a particular outcome z, any adversary in our framework must place ε mass on this outcome as well.

Upper bounds. Our upper bounds build on the Exploration-by-Optimization technique, which was introduced in Lattimore and Szepesvári (2020b) and generalized significantly by Lattimore and György (2021). The latter result shows that for a general family of mirror descent-based Exploration-by-Optimization algorithms parameterized by Bregman divergences, the regret can be bounded by the generalized Information Ratio for the associated Bregman divergence (cf. Section **??**). This approach yields bounds on pseudoregret with a similar form to Theorem 42 (with $\mathsf{dec}_\gamma(\mathrm{co}(\mathcal{M}))$ replaced by the generalized Information Ratio), but does appear to give regret bounds for adaptive adversaries, or give high-probability guarantees. Note that in general, in-expectation regret bounds do not imply high-probability regret bounds (for example, even for multi-armed bandits, the EXP3 algorithm can experience linear regret with constant probability (Lattimore and Szepesvári,

2020a)). Likewise, bounds on pseudoregret do not translate to bounds on (expected) true regret unless one restricts to oblivious adversaries. To develop high-probability regret bounds that complement our lower bounds, we depart from the Bregman divergence-based framework and exploit refined properties of Hellinger distance. We note that the work of Lattimore and Szepesvári (2020b) also proposes a high-probability Exploration-by-Optimization variant, but it is unclear whether this objective can be related to the information ratio or Decision-Estimation Coefficient for general models.[8]

Lower bounds. Our lower bounds refine the proof strategy from Foster et al. (2021). Our most important technical result is a lower bound for the stochastic setting (Theorem **??**), which improves upon Theorem 3.1 from Foster et al. (2021) by using a more refined change of measure argument. In particular, Theorem 3.1 of Foster et al. (2021) gives a lower bound based on the DEC that holds with low probability, and thus provides a meaningful converse only to algorithms with sub-Gaussian or sub-exponential tail behavior. Our lower bound gives a meaningful converse to any upper bound with sub-Chebychev tail behavior, which is a significantly weaker assumption. We note that while Theorem 3.2 of Foster et al. (2021) provides lower bounds on expected regret without assumptions on tail behavior, this result requires a stronger notion of localization than we consider here.

Recent work of Lattimore (2022), provides lower bounds on regret in a general partial monitoring setting based on a generalized Information Ratio (cf. Section **??**). This result is somewhat complementary to our lower bound (Theorem 43). On the

[8]This objective is based on a Bernstein-type tail bound, which scales with the range of the estimation functions. We avoid explicit dependence on the range using a more specialized tail bound based on Lemma 79.

positive side, Lattimore (2022) give a lower bound on *expected regret* that is always tight in terms of dependence on T, while our result only leads to tight dependence on T if one restricts to sub-Chebychev algorithms. In addition, the lower bound applies to the general partial monitoring setting, while our lower bound requires that rewards are observed. However, the lower bound of Lattimore (2022) is loose in poly($|\Pi|$) factors, and thus does not lead to meaningful dependence on problem parameters such as dimension in the same fashion as our results. An interesting question for future work is to investigate whether these techniques can be combined with our own to get the best of both worlds.

9.7 Discussion

We have shown that the convexified Decision-Estimation Coefficient is necessary and sufficient to achieve low regret for adversarial interactive decision making, establishing that convexity governs the price of adversarial outcomes. Our results elucidate the relationship between the DEC, Exploration-by-Optimization, and the Information Ratio, and we hope they will find broader use.

This work adds to a growing body of research which shows that online reinforcement learning with agnostic or adversarial outcomes can be statistically intractable (Sekhari et al., 2021b; Liu et al., 2022). A promising future direction is to extend our techniques to natural semi-adversarial models in which reinforcement learning is tractable. Another interesting direction is to address the issue of computational efficiency for large decision spaces.

9.8 Detailed proofs

9.8.1 Preliminaries

Probability spaces. We formalize the probability spaces for the DMSO framework in the same fashion as Foster et al. (2021), which we briefly summarize here. decisions are associated with a measurable space $(\Pi, \mathscr{P})$, rewards are associated with the space $(\mathcal{R}, \mathscr{R})$, and observations are associated with the space $(\mathcal{O}, \mathscr{O})$. The history up to time t is denoted by $\mathcal{H}^{(t)} = (\pi^{(1)}, r^{(1)}, o^{(1)}), \ldots, (\pi^{(t)}, r^{(t)}, o^{(t)})$. We define

$$\Omega^{(t)} = \prod_{i=1}^{t} (\Pi \times \mathcal{R} \times \mathcal{O}), \quad \text{and} \quad \mathscr{F}^{(t)} = \bigotimes_{i=1}^{t} (\mathscr{P} \otimes \mathscr{R} \otimes \mathscr{O})$$

so that $\mathcal{H}^{(t)}$ is associated with the space $(\Omega^{(t)}, \mathscr{F}^{(t)})$.

Formally, a model $M = M(\cdot, \cdot \mid \cdot) \in \mathcal{M}$ is a probability kernel from $(\Pi, \mathscr{P})$ to $(\mathcal{R} \times \mathcal{O}, \mathscr{R} \otimes \mathscr{O})$; we use the convention $M(\pi) = M(\cdot, \cdot \mid \pi)$ throughout the paper.[9] An *algorithm* for horizon T is a sequence $p^{(1)}, \ldots, p^{(T)}$, where $p^{(t)}(\cdot \mid \cdot)$ is a probability kernel from $(\Omega^{(t-1)}, \mathscr{F}^{(t-1)})$ to $(\Pi, \mathscr{P})$.

Divergences. For probability distributions $\mathbb{P}$ and $\mathbb{Q}$ over a measurable space $(\Omega, \mathscr{F})$ with a common dominating measure, we define the total variation distance as

$$D_{\mathsf{TV}}(\mathbb{P}, \mathbb{Q}) = \sup_{A \in \mathscr{F}} |\mathbb{P}(A) - \mathbb{Q}(A)| = \frac{1}{2} \int |d\mathbb{P} - d\mathbb{Q}|.$$

Hellinger distance is defined as

$$D^2_{\mathsf{H}}(\mathbb{P}, \mathbb{Q}) = \int \left(\sqrt{d\mathbb{P}} - \sqrt{d\mathbb{Q}} \right)^2,$$

[9] For measurable spaces $(\mathcal{X}, \mathscr{X})$ and $(\mathcal{Y}, \mathscr{Y})$ a probability kernel $P(\cdot \mid \cdot)$ from $(\mathcal{X}, \mathscr{X})$ to $(\mathcal{Y}, \mathscr{Y})$ has the property that (i) For all $x \in \mathcal{X}$, $P(\cdot \mid x)$ is a probability measure, (ii) for all $Y \in \mathscr{Y}$, $x \mapsto P(Y \mid x)$ is measurable.

and Kullback-Leibler divergence is defined as

$$D_{\mathsf{KL}}(\mathbb{P} \,\|\, \mathbb{Q}) = \begin{cases} \int \log\left(\frac{d\mathbb{P}}{d\mathbb{Q}}\right) d\mathbb{P}, & \mathbb{P} \ll \mathbb{Q}, \\ +\infty, & \text{otherwise.} \end{cases}$$

For a convex function $f : (0, \infty) \to \mathbb{R}$, the associated f-divergence for measures $\mathbb{P}$ and $\mathbb{Q}$ with $\mathbb{P} \ll \mathbb{Q}$ is given by

$$D_f(\mathbb{P} \,\|\, \mathbb{Q}) := \mathbb{E}_{\mathbb{Q}}\left[f\left(\frac{d\mathbb{P}}{d\mathbb{Q}}\right)\right] \tag{9.17}$$

whenever $\mathbb{P} \ll \mathbb{Q}$. More generally, defining $p = \frac{d\mathbb{P}}{d\nu}$ and $q = \frac{d\mathbb{Q}}{d\nu}$ for a common dominating measure ν, we have

$$D_f(\mathbb{P} \,\|\, \mathbb{Q}) := \int_{q>0} q f\left(\frac{p}{q}\right) d\nu + \mathbb{P}(q = 0) \cdot f'(\infty), \tag{9.18}$$

where $f'(\infty) := \lim_{x \to 0^+} x f(1/x)$.

9.8.2 Technical Tools

Tail Bounds

Lemma 79 (e.g., Lemma A.4 of Foster et al. (2021))**.** *For any sequence of real-valued random variables $(X_t)_{t \le T}$ adapted to a filtration $(\mathscr{F}_t)_{t \le T}$, we have that with probability at least $1 - \delta$,*

$$\sum_{t=1}^{T} X_t \le \sum_{t=1}^{T} \log\left(\mathbb{E}\left[e^{X_t} \mid \mathscr{F}_{t-1}\right]\right) + \log(\delta^{-1}). \tag{9.19}$$

Minimax Theorem

Lemma 80 (Sion's Minimax Theorem (Sion, 1958))**.** *Let $\mathcal{X}$ and $\mathcal{Y}$ be convex sets in linear topological spaces, and assume $\mathcal{X}$ is compact. Let $F : \mathcal{X} \times \mathcal{Y} \to \mathbb{R}$ be such*

that (i) $F(x,\cdot)$ is concave and upper semicontinuous over $\mathcal{Y}$ for all $x \in \mathcal{X}$ and (ii) $F(\cdot,y)$ is convex and lower semicontinuous over $\mathcal{X}$ for all $y \in \mathcal{Y}$. Then

$$\inf_{x\in\mathcal{X}} \sup_{y\in\mathcal{Y}} F(x,y) = \sup_{y\in\mathcal{Y}} \inf_{x\in\mathcal{X}} F(x,y). \tag{9.20}$$

Information Theory

Basic Results

Proposition 8. *For any f-divergence $D_f(\cdot \,\|\, \cdot)$, one has that for any pair of random variables (X,Y) with joint law $\mathbb{P}_{X,Y}$,*

$$\mathbb{E}_{X\sim\mathbb{P}_X}\big[D_f\big(\mathbb{P}_{Y|X} \,\|\, \mathbb{P}_Y\big)\big] = \mathbb{E}_{Y\sim\mathbb{P}_Y}\big[D_f\big(\mathbb{P}_{X|Y} \,\|\, \mathbb{P}_X\big)\big].$$

Proof of Proposition 8. Recalling that $D_f(\mathbb{P} \,\|\, \mathbb{Q}) = \mathbb{E}_{\mathbb{Q}}\Big[f\Big(\frac{d\mathbb{P}}{d\mathbb{Q}}\Big)\Big]$ for $\mathbb{P} \ll \mathbb{Q}$, we have

$$\begin{aligned}
\mathbb{E}_{X\sim\mathbb{P}_X}\big[D_f\big(\mathbb{P}_{Y|X} \,\|\, \mathbb{P}_Y\big)\big] &= \mathbb{E}_{X\sim\mathbb{P}_X}\,\mathbb{E}_{Y\sim\mathbb{P}_Y}\Big[f\Big(\tfrac{d\mathbb{P}_{Y|X}}{d\mathbb{P}_Y}\Big)\Big] \\
&= \mathbb{E}_{X\sim\mathbb{P}_X}\,\mathbb{E}_{Y\sim\mathbb{P}_Y}\Big[f\Big(\tfrac{d\mathbb{P}_{X,Y}}{d(\mathbb{P}_X\otimes\mathbb{P}_Y)}\Big)\Big] \\
&= \mathbb{E}_{Y\sim\mathbb{P}_Y}\,\mathbb{E}_{X\sim\mathbb{P}_X}\Big[f\Big(\tfrac{d\mathbb{P}_{X|Y}}{d\mathbb{P}_X}\Big)\Big] = \mathbb{E}_{Y\sim\mathbb{P}_Y}\big[D_f\big(\mathbb{P}_{X|Y} \,\|\, \mathbb{P}_X\big)\big],
\end{aligned}$$

where we have used that $\mathbb{P}_{Y|X} \ll \mathbb{P}_Y$, $\mathbb{P}_{X|Y} \ll \mathbb{P}_X$, and $\mathbb{P}_{X,Y} \ll \mathbb{P}_X \otimes \mathbb{P}_Y$. □

Change of Measure

Lemma 81 (Donsker-Varadhan (e.g., Polyanskiy and Wu (2014))). *Let $\mathbb{P}$ and $\mathbb{Q}$ be probability measures on $(\mathcal{X},\mathscr{F})$. Then*

$$D_{\mathsf{KL}}(\mathbb{P} \,\|\, \mathbb{Q}) = \sup_{h:\mathcal{X}\to\mathbb{R}} \{\mathbb{E}_{\mathbb{P}}[h(X)] - \log(\mathbb{E}_{\mathbb{Q}}[\exp(h(X))])\}. \tag{9.21}$$

Lemma 82. *Let $\mathbb{P}$ and $\mathbb{Q}$ be probability distributions over a measurable space $(\mathcal{X}, \mathscr{F})$. Then for all functions $h : \mathcal{X} \to \mathbb{R}$,*

$$|\mathbb{E}_{\mathbb{P}}[h(X)] - \mathbb{E}_{\mathbb{Q}}[h(X)]| \leq \sqrt{2^{-1}(\mathbb{E}_{\mathbb{P}}[h^2(X)] + \mathbb{E}_{\mathbb{Q}}[h^2(X)]) \cdot D^2_{\mathsf{H}}(\mathbb{P}, \mathbb{Q})}. \tag{9.22}$$

Proof of Lemma 82. From Polyanskiy and Wu (2014), it holds that for all functions $h : \mathcal{X} \to \mathbb{R}$, if $\mathbb{P} \ll \mathbb{Q}$,

$$|\mathbb{E}_{\mathbb{P}}[h(X)] - \mathbb{E}_{\mathbb{Q}}[h(X)]| \leq \sqrt{\mathbb{V}_{\mathbb{Q}}[h(X)] \cdot D_{\chi^2}(\mathbb{P} \parallel \mathbb{Q})} \leq \sqrt{\mathbb{E}_{\mathbb{Q}}[h^2(X)] \cdot D_{\chi^2}(\mathbb{P} \parallel \mathbb{Q})}, \tag{9.23}$$

where $D_{\chi^2}(\mathbb{P} \parallel \mathbb{Q}) := \int \frac{(d\mathbb{P} - d\mathbb{Q})^2}{d\mathbb{Q}}$ and $\mathbb{V}_{\mathbb{Q}}$ denotes the variance under $\mathbb{Q}$. The result follows by using that $D_{\chi^2}\big(\mathbb{P} \parallel \frac{\mathbb{P}+\mathbb{Q}}{2}\big) \leq D^2_{\mathsf{H}}(\mathbb{P}, \mathbb{Q})$. □

Lemma 78. *Let $\mathbb{P}$ and $\mathbb{Q}$ be probability distributions over a measurable space $(\mathcal{X}, \mathscr{F})$. Then*

$$\frac{1}{2} D^2_{\mathsf{H}}(\mathbb{P}, \mathbb{Q}) \leq \sup_{g : \mathcal{X} \to \mathbb{R}} \big\{1 - \mathbb{E}_{\mathbb{P}}\big[e^g\big] \cdot \mathbb{E}_{\mathbb{Q}}\big[e^{-g}\big]\big\} \leq D^2_{\mathsf{H}}(\mathbb{P}, \mathbb{Q}). \tag{9.12}$$

Proof of Lemma 78. We first show that Hellinger distance is lower bounded by the quantity in (9.12). Recall that Hellinger distance is the f-divergence associated with $f(x) = (1 - \sqrt{x})^2$ (cf. (9.18)). Let $f^\star(y) := \sup_{x \geq 0}\{xy - f(x)\}$ be the Fenchel dual of f, which has the form

$$f^\star(y) = \begin{cases} \frac{y}{1-y}, & y < 1, \\ \infty, & y \geq 1. \end{cases}$$

Using Theorem 7.14 of Polyanskiy (2020), we express Hellinger distance as a variational problem based on the dual:

$$D^2_{\mathsf{H}}(\mathbb{P}, \mathbb{Q}) = \sup_{h : \mathcal{X} \to (-\infty, 1)} \{\mathbb{E}_{\mathbb{P}}[h(X)] - \mathbb{E}_{\mathbb{Q}}[f^\star(h(X))]\}$$

$$= \sup_{h:\mathcal{X}\to(-\infty,1)} \left\{ \mathbb{E}_{\mathbb{P}}[h(X)] - \mathbb{E}_{\mathbb{Q}}\left[\frac{h(X)}{1-h(X)}\right] \right\}.$$

Reparameterizing via $h(X) = 1 - h'(X)$ for $h' : \mathcal{X} \to (0, \infty)$, this gives

$$D^2_{\mathsf{H}}(\mathbb{P}, \mathbb{Q}) = \sup_{h:\mathcal{X}\to(0,\infty)} \left\{ 2 - \mathbb{E}_{\mathbb{P}}[h(X)] - \mathbb{E}_{\mathbb{Q}}\left[\frac{1}{h(X)}\right] \right\}.$$

To conclude, observe that for any test function $g : \mathcal{X} \to \mathbb{R}$, by setting $h(x) = e^{g(x)} \cdot \mathbb{E}_{\mathbb{Q}}[e^{-g}]$, we have

$$\begin{aligned} 2 - \mathbb{E}_{\mathbb{P}}[h(X)] - \mathbb{E}_{\mathbb{Q}}\left[\frac{1}{h(X)}\right] &= 2 - \mathbb{E}_{\mathbb{P}}\left[e^{g}\right] \cdot \mathbb{E}_{\mathbb{Q}}\left[e^{-g}\right] - \mathbb{E}_{\mathbb{Q}}\left[e^{-g}\right] / \mathbb{E}_{\mathbb{Q}}\left[e^{-g}\right] \\ &= 1 - \mathbb{E}_{\mathbb{P}}\left[e^{g}\right] \cdot \mathbb{E}_{\mathbb{Q}}\left[e^{-g}\right], \end{aligned}$$

so that

$$D^2_{\mathsf{H}}(\mathbb{P}, \mathbb{Q}) \geq \sup_{g:\mathcal{X}\to\mathbb{R}} \left\{ 1 - \mathbb{E}_{\mathbb{P}}\left[e^{g}\right] \cdot \mathbb{E}_{\mathbb{Q}}\left[e^{-g}\right] \right\}.$$

We now prove the other direction of the inequality in (9.12). Let ν be a common dominating measure for $\mathbb{P}$ and $\mathbb{Q}$, and set $p = \frac{d\mathbb{P}}{d\nu}$ and $q = \frac{d\mathbb{Q}}{d\nu}$. We first consider the case where $p, q > 0$ everywhere. Set $g(x) = \frac{1}{2}\log(q(x)/p(x))$. Then we have $\mathbb{E}_{\mathbb{P}}\left[e^{g}\right] = \int \sqrt{pq}d\nu = 1 - \frac{1}{2}D^2_{\mathsf{H}}(\mathbb{P}, \mathbb{Q})$, and likewise, $\mathbb{E}_{\mathbb{Q}}\left[e^{-g}\right] = \int \sqrt{pq}d\nu = 1 - \frac{1}{2}D^2_{\mathsf{H}}(\mathbb{P}, \mathbb{Q})$. As a result,

$$\sup_{g:\mathcal{X}\to\mathbb{R}} \left\{ 1 - \mathbb{E}_{\mathbb{P}}\left[e^{g}\right] \cdot \mathbb{E}_{\mathbb{Q}}\left[e^{-g}\right] \right\} \geq 1 - (1 - \tfrac{1}{2}D^2_{\mathsf{H}}(\mathbb{P}, \mathbb{Q}))^2 \geq \frac{1}{2}D^2_{\mathsf{H}}(\mathbb{P}, \mathbb{Q}),$$

where we have used that $D^2_{\mathsf{H}}(\mathbb{P}, \mathbb{Q}) \in [0, 2]$. For the general case, we appeal to Lemma 83 below and take $\varepsilon \to 0$. □

The following result is generalization of Lemma 78 which shows that up to small approximation error, the lower bound in (9.12) can be obtained using test functions with small magnitude.

Lemma 83. *Let $\mathbb{P}$ and $\mathbb{Q}$ be probability distributions over a measurable space $(\mathcal{X}, \mathscr{F})$. Then for any $\alpha \geq 1$,*

$$\frac{1}{2}D^2_{\mathsf{H}}(\mathbb{P}, \mathbb{Q}) \leq \sup_{g\in\mathcal{G}_\alpha} \left\{ 1 - \mathbb{E}_{\mathbb{P}}\left[e^{g}\right] \cdot \mathbb{E}_{\mathbb{Q}}\left[e^{-g}\right] \right\} + 4e^{-\alpha}, \tag{9.24}$$

where $\mathcal{G}_\alpha := \{g : \mathcal{X} \to \mathbb{R} \mid \|g\|_\infty \le \alpha\}$.

Proof of Lemma 83. Fix $\alpha \ge 1$ and let $\varepsilon := e^{-2\alpha}$. Note that $\varepsilon \in (0, e^{-2})$. Given measures $\mathbb{P}$ and $\mathbb{Q}$, set $\mathbb{P}_\varepsilon = (1-\varepsilon)\mathbb{P} + \varepsilon\mathbb{Q}$ and $\mathbb{Q}_\varepsilon = (1-\varepsilon)\mathbb{Q} + \varepsilon\mathbb{P}$. Consider the test function $g = \frac{1}{2}\log(\frac{d\mathbb{Q}_\varepsilon}{d\mathbb{P}_\varepsilon})$, which has the following properties:

- $\|g\|_\infty \le \frac{1}{2}\log\big(\frac{1-\varepsilon}{\varepsilon} + \frac{\varepsilon}{1-\varepsilon}\big) \le \frac{1}{2}\log(\varepsilon^{-1})$, where we have used that $\varepsilon \le 1/2$. This establishes that $g \in \mathcal{G}_\alpha$.
- $\mathbb{E}_{\mathbb{P}}\big[e^g\big] \le (1-\varepsilon)^{-1/2}\int\sqrt{d\mathbb{P}d\mathbb{Q}_\varepsilon} = (1-\varepsilon)^{-1/2}\big(1 - \frac{1}{2}D^2_{\mathsf{H}}(\mathbb{P}, \mathbb{Q}_\varepsilon)\big)$.
- $\mathbb{E}_{\mathbb{Q}}\big[e^{-g}\big] \le (1-\varepsilon)^{-1/2}\int\sqrt{d\mathbb{P}_\varepsilon d\mathbb{Q}} = (1-\varepsilon)^{-1/2}\big(1 - \frac{1}{2}D^2_{\mathsf{H}}(\mathbb{P}_\varepsilon, \mathbb{Q})\big)$.

Using these bounds yields

$$\begin{aligned}\sup_{g:\mathcal{X}\to\mathbb{R}}\big\{1 - \mathbb{E}_{\mathbb{P}}\big[e^g\big]\cdot\mathbb{E}_{\mathbb{Q}}\big[e^{-g}\big]\big\} &\ge 1 - (1-\varepsilon)^{-1}(1 - \tfrac{1}{2}D^2_{\mathsf{H}}(\mathbb{P}_\varepsilon, \mathbb{Q}))(1 - \tfrac{1}{2}D^2_{\mathsf{H}}(\mathbb{P}, \mathbb{Q}_\varepsilon)) \\ &\ge 1 - (1-\varepsilon)^{-1}(1 - \tfrac{1}{2}D^2_{\mathsf{H}}(\mathbb{P}_\varepsilon, \mathbb{Q})) \\ &\ge (1-\varepsilon)^{-1}\cdot\frac{1}{2}D^2_{\mathsf{H}}(\mathbb{P}_\varepsilon, \mathbb{Q}) - 2\varepsilon.\end{aligned}$$

Finally, we note that by the triangle inequality for Hellinger distance and convexity of squared Hellinger distance,

$$D_{\mathsf{H}}(\mathbb{P}, \mathbb{Q}) \le D_{\mathsf{H}}(\mathbb{P}_\varepsilon, \mathbb{Q}) + D_{\mathsf{H}}(\mathbb{P}, \mathbb{P}_\varepsilon) \le D_{\mathsf{H}}(\mathbb{P}_\varepsilon, \mathbb{Q}) + \varepsilon^{1/2}D_{\mathsf{H}}(\mathbb{P}, \mathbb{Q}),$$

so that $D^2_{\mathsf{H}}(\mathbb{P}_\varepsilon, \mathbb{Q}) \ge (1-\varepsilon^{1/2})^2 D^2_{\mathsf{H}}(\mathbb{P}, \mathbb{Q})$, and

$$\sup_{g:\mathcal{X}\to\mathbb{R}}\big\{1 - \mathbb{E}_{\mathbb{P}}\big[e^g\big]\cdot\mathbb{E}_{\mathbb{Q}}\big[e^{-g}\big]\big\} \ge \frac{(1-\varepsilon^{1/2})^2}{1-\varepsilon}\frac{1}{2}D^2_{\mathsf{H}}(\mathbb{P}, \mathbb{Q}) - 2\varepsilon \ge \frac{1}{2}D^2_{\mathsf{H}}(\mathbb{P}, \mathbb{Q}) - 4\varepsilon^{1/2},$$

where we have used that $\varepsilon \in (0,1)$ and $D^2_{\mathsf{H}}(\mathbb{P}, \mathbb{Q}) \in [0, 2]$.

□

Online Learning

Lemma 84 (e.g., Cesa-Bianchi and Lugosi (2006)). *Let Π be a finite set. Consider the exponential weights method with learning rate $\eta > 0$ and initial point $q^{(1)} = \mathrm{unif}(\Pi)$, which has the update:*

$$q^{(t+1)}(\pi) = \frac{\exp(\eta \sum_{i \le t} f^{(i)}(\pi))}{\sum_{\pi'} \exp(\eta \sum_{i \le t} f^{(t)}(\pi'))},$$

for an arbitrary (potentially adaptively selected) sequence of reward vectors $f^{(1)}, \ldots, f^{(T)}$ in $\mathbb{R}^{\Pi}$. This strategy ensures that with probability 1,

$$\sum_{t=1}^{T} \langle q - q^{(t)}, f^{(t)} \rangle \le \sum_{t=1}^{T} \langle q^{(t+1)} - q^{(t)}, f^{(t)} \rangle - \frac{1}{\eta} \sum_{t=1}^{T} D_{\mathsf{KL}}(q^{(t+1)} \,\|\, q^{(t)}) + \frac{D_{\mathsf{KL}}(q \,\|\, q^{(1)})}{\eta},$$

for all $q \in \Delta(\Pi)$.

9.8.3 Proof of Theorem 42

Theorem 42 (Main upper bound). *For any choice of $\eta > 0$, Algorithm 7 ensures that for all $\delta > 0$, with probability at least $1 - \delta$,*

$$\mathbf{Reg}_{\mathsf{DM}} \le \mathsf{dec}_{1/8\eta}(\mathrm{co}(\mathcal{M})) \cdot T + \frac{2}{\eta} \cdot \log(|\Pi|/\delta). \tag{9.8}$$

In particular, for any $\delta > 0$, with appropriate η, the algorithm ensures that with probability at least $1 - \delta$,

$$\mathbf{Reg}_{\mathsf{DM}} \le O(1) \cdot \inf_{\gamma > 0} \{\mathsf{dec}_{\gamma}(\mathrm{co}(\mathcal{M})) \cdot T + \gamma \cdot \log(|\Pi|/\delta)\}. \tag{9.9}$$

Proof of Theorem 42. Let us adopt convention $\langle p, f \rangle = \sum_{\pi} p(\pi) \cdot f(\pi)$ and let e_{π} denote the πth standard basis vector in $\mathbb{R}^{\Pi}$. For each $\pi^{\star} \in \Pi$, we write regret

as

$$\mathbf{Reg}_{\mathsf{DM}}(\pi^\star) = \sum_{t=1}^{T} \mathbb{E}_{\pi\sim p^{(t)}}\left[f^{M^{(t)}}(\pi^\star) - f^{M^{(t)}}(\pi)\right] = \sum_{t=1}^{T}\left\langle e_{\pi^\star} - p^{(t)}, f^{M^{(t)}}\right\rangle.$$

Adding and subtracting $\sum_{t=1}^{T}\left\langle e_{\pi^\star} - q^{(t)}, \widehat{f}^{(t)}\right\rangle$, we rewrite this as

$$\sum_{t=1}^{T}\left\langle e_{\pi^\star} - p^{(t)}, f^{M^{(t)}}\right\rangle = \sum_{t=1}^{T}\left\langle e_{\pi^\star} - p^{(t)}, f^{M^{(t)}}\right\rangle + \sum_{t=1}^{T}\left\langle e_{\pi^\star} - q^{(t)}, \widehat{f}^{(t)}\right\rangle - \sum_{t=1}^{T}\left\langle e_{\pi^\star} - q^{(t)}, \widehat{f}^{(t)}\right\rangle. \tag{9.25}$$

The exponential weights update ensures (Lemma 84) that with probability 1,

$$\begin{aligned}\sum_{t=1}^{T}\left\langle e_{\pi^\star} - q^{(t)}, \widehat{f}^{(t)}\right\rangle &\leq \sum_{t=1}^{T}\left\langle q^{(t+1)} - q^{(t)}, \widehat{f}^{(t)}\right\rangle - \frac{1}{\eta}\sum_{t=1}^{T} D_{\mathsf{KL}}(q^{(t+1)} \,\|\, q^{(t)}) + \frac{D_{\mathsf{KL}}(e_{\pi^\star} \,\|\, q^{(1)})}{\eta} \\ &\leq \sum_{t=1}^{T}\left\langle q^{(t+1)} - q^{(t)}, \widehat{f}^{(t)}\right\rangle - \frac{1}{\eta}\sum_{t=1}^{T} D_{\mathsf{KL}}(q^{(t+1)} \,\|\, q^{(t)}) + \frac{\log|\Pi|}{\eta}.\end{aligned}$$

In addition, using Lemma 81, we have that for all t,

$$\left\langle q^{(t+1)}, \widehat{f}^{(t)}\right\rangle - \frac{1}{\eta} D_{\mathsf{KL}}(q^{(t+1)} \,\|\, q^{(t)}) \leq \frac{1}{\eta}\log\left(\sum_{\pi} q^{(t)}(\pi)\exp\left(\eta\cdot\widehat{f}^{(t)}(\pi)\right)\right).$$

Hence, combining this with (9.25), we have

$$\begin{aligned}\mathbf{Reg}_{\mathsf{DM}}(\pi^\star) \leq \sum_{t=1}^{T}&\left\langle e_{\pi^\star} - p^{(t)}, f^{M^{(t)}}\right\rangle - \left\langle e_{\pi^\star}, \widehat{f}^{(t)}\right\rangle \\ &+ \frac{1}{\eta}\sum_{t=1}^{T}\log\left(\sum_{\pi} q^{(t)}(\pi)\exp\left(\eta\cdot\widehat{f}^{(t)}(\pi)\right)\right) + \frac{\log|\Pi|}{\eta}.\end{aligned}$$

Let $\mathscr{F}_t := \sigma(\pi^{(1)}, z^{(1)}, \ldots, \pi^{(t)}, z^{(t)})$ be a filtration, and let $\mathbb{E}_t[\cdot] := \mathbb{E}[\cdot \mid \mathscr{F}_t]$. For each $\pi \in \Pi$, define a sequence of random variables $\{X_t(\pi)\}_{t=1}^{T}$ via

$$X_t(\pi) = \frac{1}{\eta}\log\left(\sum_{\pi'} q^{(t)}(\pi')\exp\left(\eta\cdot\widehat{f}^{(t)}(\pi')\right)\right) - \left\langle e_{\pi^\star}, \widehat{f}^{(t)}\right\rangle.$$

Using Lemma 79 and a union bound, we have that for any $\eta > 0$, with probability at least $1-\delta$, for all $\pi \in \Pi$

$$\sum_{t=1}^{T} X_t(\pi) \leq \frac{1}{\eta}\sum_{t=1}^{T}\log(\mathbb{E}_{t-1}[\exp(\eta X_t(\pi))]) + \frac{\log(|\Pi|/\delta)}{\eta}.$$

Since this bounded holds uniformly for all π, we are guaranteed that with probability at least $1-\delta$, for all $\pi^\star \in \Pi$,

$$\mathbf{Reg}_{\mathsf{DM}}(\pi^\star) \leq \sum_{t=1}^{T} \left\langle e_{\pi^\star} - p^{(t)}, f^{M^{(t)}} \right\rangle + \frac{1}{\eta} \sum_{t=1}^{T} \log(\mathbb{E}_{t-1}[\exp(\eta X_t(\pi^\star))]) + 2\frac{\log(|\Pi|/\delta)}{\eta}.$$

We compute that for any $\pi^\star \in \Pi$,

$$\begin{aligned}
&\log(\mathbb{E}_{t-1}[\exp(\eta X_t(\pi^\star))]) \\
&= \log\left(\mathbb{E}_{\pi\sim p^{(t)}} \mathbb{E}_{z\sim M^{(t)}(\pi)} \mathbb{E}_{\pi'\sim q^{(t)}} \left[\exp\left(\frac{\eta}{p^{(t)}(\pi)} \cdot \left(g^{(t)}(\pi'\,;\pi,z) - g^{(t)}(\pi^\star\,;\pi,z)\right)\right)\right]\right) \\
&\leq \mathbb{E}_{\pi\sim p^{(t)}} \mathbb{E}_{z\sim M^{(t)}(\pi)} \mathbb{E}_{\pi'\sim q^{(t)}} \left[\exp\left(\frac{\eta}{p^{(t)}(\pi)} \cdot \left(g^{(t)}(\pi'\,;\pi,z) - g^{(t)}(\pi^\star\,;\pi,z)\right)\right)\right] - 1,
\end{aligned}$$

where we have used that $\log(x) \leq x-1$ for $x>0$. Hence, with probability at least $1-\delta$, for all $\pi^\star \in \Pi$,

$$\begin{aligned}
\mathbf{Reg}_{\mathsf{DM}}(\pi^\star) \leq \sum_{t=1}^{T} \left\langle e_{\pi^\star} - p^{(t)}, f^{M^{(t)}} \right\rangle + 2\frac{\log(|\Pi|/\delta)}{\eta} \\
+ \\
\frac{1}{\eta}\left(\mathbb{E}_{\pi\sim p^{(t)}} \mathbb{E}_{z\sim M^{(t)}(\pi)} \mathbb{E}_{\pi'\sim q^{(t)}} \left[\exp\left(\frac{\eta}{p^{(t)}(\pi)} \cdot \left(g^{(t)}(\pi'\,;\pi,z) - g^{(t)}(\pi^\star\,;\pi,z)\right)\right)\right] - 1\right) \\
= \sum_{t=1}^{T} \Gamma_{q^{(t)},\eta}(p^{(t)}, g^{(t)}\,;\pi^\star, M^{(t)}) + 2\frac{\log(|\Pi|/\delta)}{\eta} \\
\leq \mathsf{exo}_\eta(\mathcal{M}) \cdot T + 2\frac{\log(|\Pi|/\delta)}{\eta},
\end{aligned}$$

where the last line uses that $(p^{(t)}, g^{(t)})$ are chosen to minimize the Exploration-By-Optimization objective. Finally, using Theorem **??**, $\mathsf{exo}_\eta(\mathcal{M}) \leq \mathsf{dec}_{(8\eta)^{-1}}(\mathrm{co}(\mathcal{M}))$.

□

9.8.4 Proof of Theorem 44

Theorem 44. *Suppose there exists $M_0 \in \mathcal{M}$ such that f^{M_0} is a constant function, and that $|\Pi| < \infty$.*

1. *If there exists* $\rho > 0$ *such that* $\lim_{\gamma\to\infty} \mathsf{dec}_\gamma(\mathrm{co}(\mathcal{M})) \cdot \gamma^\rho = 0$, *then* $\lim_{T\to\infty} \frac{\mathfrak{M}(\mathcal{M},T)}{T^p} = 0$ *for some* $p < 1$.
2. *If* $\lim_{\gamma\to\infty} \mathsf{dec}_\gamma(\mathrm{co}(\mathcal{M})) \cdot \gamma^\rho > 0$ *for all* $\rho > 0$, *then* $\lim_{T\to\infty} \frac{\mathfrak{M}(\mathcal{M},T)}{T^p} = \infty$ *for all* $p < 1$.

In addition, the same conclusion holds when $\Pi = \Pi_T$ *grows with* T, *but has* $\log|\Pi_T| = O(T^q)$ *for any* $q < 1$.

Proof of Theorem 44. This proof closely follows that of Theorem 3.5 in Foster et al. (2021).

Upper bound. Assume that $\lim_{\gamma\to\infty} \mathsf{dec}_\gamma(\mathrm{co}(\mathcal{M})) \cdot \gamma^\rho = 0$ for some $\rho > 0$, and that $\log|\Pi_T| = \widetilde{O}(T^q)$ for some $q < 1$. Using Theorem 42 with $\delta = 1/T$, there exists an algorithm such that for each T, for all adversaries,

$$\mathbb{E}[\mathbf{Reg}_{\mathsf{DM}}(T)] \le \widetilde{O}(\mathsf{dec}_\gamma(\mathrm{co}(\mathcal{M})) \cdot T + \gamma \cdot \log|\Pi_T|) \le \widetilde{O}(\mathsf{dec}_\gamma(\mathrm{co}(\mathcal{M})) \cdot T + \gamma \cdot T^q),$$

with $\widetilde{O}(\cdot)$ hiding factors logarithmic in T. For each T, we set $\gamma = \gamma_T := T^{\frac{1-q}{1+\rho}}$; recall that $1 - q > 0$. The assumption that $\lim_{\gamma\to\infty} \mathsf{dec}_\gamma(\mathrm{co}(\mathcal{M})) \cdot \gamma^\rho = 0$, implies that for all $\varepsilon > 0$, there exists $\gamma' > 0$ such that $\mathsf{dec}_\gamma(\mathrm{co}(\mathcal{M})) \le \varepsilon/\gamma^\rho$ for all $\gamma \ge \gamma'$. For T sufficiently large, this implies that for all adversaries

$$\mathbb{E}[\mathbf{Reg}_{\mathsf{DM}}] \le \widetilde{O}\left(\frac{T}{\gamma_T^\rho} + \gamma_T \cdot T^q\right) = \widetilde{O}(T^{\frac{1+\rho q}{1+\rho}}).$$

Defining $p' := \frac{1}{2}(p+1) < 1$, this establishes that

$$\lim_{T\to\infty} \frac{\mathfrak{M}(\mathcal{M},T)}{T^{p'}} = 0.$$

t

Lower bound. Assume that $\lim_{\gamma\to\infty} \mathsf{dec}_\gamma(\mathrm{co}(\mathcal{M})) \cdot \gamma^\rho = \infty$ for all $\rho > 0$ (this is equivalent to assuming that $\lim_{\gamma\to\infty} \mathsf{dec}_\gamma(\mathrm{co}(\mathcal{M})) \cdot \gamma^\rho > 0$ for all $\rho > 0$, as in the theorem statement). Let $\rho \in (0, 1/2)$ be fixed. Using Theorem **??**, we are guaranteed that for any algorithm, there exists an adversary for which $\mathbb{E}[\mathbf{Reg}_{\mathsf{DM}}] \geq 0$ and

$$\mathbb{E}[\mathbf{Reg}_{\mathsf{DM}}] + \sqrt{\mathbb{E}[\mathbf{Reg}_{\mathsf{DM}}] \cdot T} = \widetilde{\Omega}\big(\mathsf{dec}_{\gamma,\varepsilon(\gamma,T)}(\mathrm{co}(\mathcal{M})) \cdot T\big),$$

for all $\gamma = \omega(\sqrt{T\log(T)})$, where $\varepsilon(\gamma, T) := c \cdot \frac{\gamma}{T\log(T)}$ for a sufficiently small numerical constant $c \leq 1$. Since there exists $M_0 \in \mathcal{M}$ such that the function f^{M_0} is constant, Lemma B.1 of Foster et al. (2021) further implies that

$$\mathbb{E}[\mathbf{Reg}_{\mathsf{DM}}] + \sqrt{\mathbb{E}[\mathbf{Reg}_{\mathsf{DM}}] \cdot T} = \widetilde{\Omega}(\varepsilon(\gamma, T) \cdot \mathsf{dec}_\gamma(\mathrm{co}(\mathcal{M})) \cdot T).$$

For each T, set $\gamma = \gamma_T := T$. By the assumption that $\lim_{\gamma\to\infty} \mathsf{dec}_\gamma(\mathrm{co}(\mathcal{M})) \cdot \gamma^\rho = \infty$, it holds that for T sufficiently large, $\mathsf{dec}_{\gamma_T}(\mathrm{co}(\mathcal{M})) \geq \gamma_T^{-\rho}$, which implies that and

$$\mathbb{E}[\mathbf{Reg}_{\mathsf{DM}}] + \sqrt{\mathbb{E}[\mathbf{Reg}_{\mathsf{DM}}] \cdot T} = \widetilde{\Omega}\left(\frac{T}{\gamma_T^\rho}\right),$$

where we have used that $\varepsilon(\gamma_T, T) \propto \frac{1}{\log(T)}$. Rearranging, this implies that

$$\mathbb{E}[\mathbf{Reg}_{\mathsf{DM}}] = \widetilde{\Omega}\big(T^{1-2\rho}\big).$$

Hence, for any $p \in (0, 1)$, by setting $\rho = \frac{1-p}{2} \in (0, 1/2)$, we have

$$\mathbb{E}[\mathbf{Reg}_{\mathsf{DM}}] = \widetilde{\Omega}(T^p).$$

Applying this argument with $p' = \frac{1}{2}(p + 1) \in (1/2, 1)$ yields

$$\lim_{T\to\infty} \frac{\mathfrak{M}(\mathcal{M}, T)}{T^p} = \infty.$$

□

9.8.5 Proofs for Examples (Section 9.8.5)

Preliminaries. Our lower bounds on the Decision-Estimation Coefficient involve a constructing hard sub-family of models. Recall the following definition from Foster et al. (2021).

Definition 23 ((α, β, δ)-family)**.** *A reference model $\overline{M} \in \mathcal{M}$ and collection $\{M_1, \ldots, M_N\}$ with $N \geq 2$ are said to be an (α, β, δ)-family if the following properties hold:*

- *Regret property. There exist functions $u^M : \Pi \mapsto [0, 1]$, with $\sum_{M \in \mathcal{M}} u^M(\pi) \leq \frac{N}{2}$ for all π such that*

$$f^M(\pi_M) - f^M(\pi) \geq \alpha \cdot (1 - u^M(\pi))$$

  for all $M \in \mathcal{M}$.

- *Information property. There exist functions $v^M : \Pi \mapsto [0, 1]$, with $\sum_{M \in \mathcal{M}} v^M(\pi) \leq 1$ for all π, such that*

$$D^2_{\mathsf{H}}\big(M(\pi), \overline{M}(\pi)\big) \leq \beta \cdot v^M(\pi) + \delta.$$

Any (α, β, δ)-family leads to a difficult decision making problem because a given decision can have low regret or large information gain on (roughly) one model in the family. This is formalized through the following lemma.

Lemma 85 (Lemma 5.1, Foster et al. (2021))**.** *Let $\mathcal{M} = \{M_1, \ldots, M_N\}$ be an (α, β, δ)-family with respect to $\overline{M}$. Then, for all $\gamma \geq 0$,*

$$\mathsf{dec}_\gamma(\mathcal{M}, \overline{M}) \geq \frac{\alpha}{2} - \gamma\left(\frac{\beta}{N} + \delta\right).$$

The following technical lemma bounds Hellinger distance for Bernoulli distributions.

Lemma 86 (Lemma A.7, (Foster et al., 2021))**.** *For any* $\Delta \in (0, 1/2)$*,*

$$D^2_{\mathsf{H}}\Big(\mathrm{Ber}\Big(\frac{1}{2} + \Delta\Big), \mathrm{Ber}\Big(\frac{1}{2}\Big)\Big) \leq 3\Delta^2.$$

Proof for Example 6 (Tabular MDP)

In this section, we prove the lower bound in Example 6. We first derive an intermediate result which gives a lower bound on the Decision-Estimation Coefficient when the model class $\mathcal{M}$ consists of *mixtures of* K *MDPs*; this is equivalent to the subset of $\mathrm{co}(\mathcal{M})$ where we restrict to support size K, as well as the so-called latent MDP setting (Kwon et al., 2021).

Lemma 87. *Let* $K \geq 1$ *be given. Let* $\mathcal{M}$ *be the class of* mixtures of K MDPs *with horizon* H*,* $S \geq 2$ *states,* $A \geq 2$ *actions, and* $\sum_{h=1}^{H} r_h \in [0, 1]$*. Then there exists* $\overline{M} \in \mathcal{M}$ *such that for all* $\gamma \geq A^{\min\{S-1,H,K\}}/6$*,*

$$\mathsf{dec}_\gamma(\mathcal{M}_{\varepsilon_\gamma}(\overline{M}), \overline{M}) \geq \frac{A^{\min\{S-1,H,K\}}}{24\gamma},$$

where $\varepsilon_\gamma := \frac{A^{\min\{S-1,H,K\}}}{24\gamma}$*.*

The proof of this result proceeds by constructing a hard sub-family of models and appealing to Lemma 85. Our construction is based of the lower bound for latent MDPs in Kwon et al. (2021).

Proof of Lemma 87. Let $\mathcal{S}$ and $\mathcal{A}$ be arbitrary sets with $|\mathcal{S}| = S$ and $|\mathcal{A}| = A$. Let $\Delta \in (0, 1/2)$ be a parameter to be chosen later, and define $\overline{K} := \min\{S - 1, K, H\}$. Partition the state space $\mathcal{S}$ into sets $\mathcal{S}'$ and $\mathcal{S} \setminus \mathcal{S}'$ such that $|\mathcal{S}'| = \overline{K} + 1$,

and label the states in $\mathcal{S}'$ as $\{s^{(1)}, \ldots, s^{(\overline{K}+1)}\}$. Additionally, define sets via $\mathcal{S}_h = \{s^{(h)}, s^{(\overline{K}+1)}\}$ for $h \leq \overline{K}$ and $\mathcal{S}_h = \{s^{(\overline{K}+1)}\} \cup (S \setminus S')$ for $\overline{K} < h \leq H+1$. Recall that the decision space Π_{NS} is the set of all deterministic non-stationary policies $\pi = (\pi_1, \ldots, \pi_H)$ where $\pi_h : \mathcal{S}_h \mapsto \mathcal{A}$.

We construct a class $\mathcal{M}' \subseteq \mathcal{M}$ in which each model $M \in \mathcal{M}'$ is specified by

$$M = \big\{\{\mathcal{S}_h\}_{h=1}^{H+1}, \mathcal{A}, \{\mathbb{M}_k^M\}_{k=1}^{\overline{K}}, \{a_k^M\}_{k=1}^{K}\big\},$$

where for each $k \in [\overline{K}]$, $a_k^M \in \mathcal{A}$, and where $\mathbb{M}_k^M$ is a tabular MDP specified by

$$\mathbb{M}_k^M = \big\{\{\mathcal{S}_h\}_{h=1}^{H+1}, \mathcal{A}, \big\{P_{h,k}^M\big\}_{h=1}^{H}, \big\{R_{h,k}^M\big\}_{h=1}^{H}, \delta_{s^{(1)}}\big\}.$$

Here, $d_1 = \delta_{s^{(1)}}$, so that the initial state s_1 is $s^{(1)}$ deterministically. The transitions $P_{h,k}^M$ and rewards $R_{h,k}^M$ are constructed as follows.

- Construction of $\mathbb{M}_1^M$.

  (i) For all $h \leq H$, the dynamics $P_{h,k}^M$ are deterministic. For an action a_h in the state s_h, the next state s_{h+1} is

$$s_{h+1} = \begin{cases} s^{(h+1)}, & \text{if } h \leq \overline{K},\ s_h = s^{(h)}, \text{ and } a_h = a_i^M, \\ s^{(\overline{K}+1)}, & \text{if } h \leq \overline{K},\ s_h = s^{(h)}, \text{ and } a_h \neq a_i^M, \\ s_h, & \text{otherwise.} \end{cases}$$

  (ii) The reward distribution is given by

$$R_{h,k}^M(s_h, a_h) = \begin{cases} \mathrm{Ber}\big(\frac{1}{2} + \Delta\big), & \text{if} \quad h = \overline{K}, s_h = s^{(\overline{K})}, \text{ and } a_h = a_{\overline{K}}^M, \\ \mathrm{Ber}\big(\frac{1}{2}\big), & \text{if} \quad h = \overline{K}, s_h = s^{(\overline{K})}, \text{ and } a_h \neq a_{\overline{K}}^M, \\ 0, & \text{otherwise.} \end{cases}$$

- Construction of $\mathbb{M}_j^M$ for $2 \leq j \leq \overline{K}$.

(i) For each $h \leq H$, the dynamics $P^M_{h,k}$ are deterministic. For action a_h in state s_h, the next state s_{h+1} is

$$s_{h+1} = \begin{cases} s^{(h+1)} & \text{if} \quad s_h = s^{(h)} \text{ and } h < j \\ s^{(\overline{K}+1)} & \text{if} \quad s_h = s^{(h)}, h = j \text{ and } a_h = a^M_h \\ s^{(h+1)} & \text{if} \quad s_h = s^{(h)}, h = j \text{ and } a_h \neq a^M_h \\ s^{(h+1)} & \text{if} \quad s_h = s^{(h)}, h > j \text{ and } a_h = a^M_h \\ s^{(\overline{K}+1)} & \text{if} \quad s_h = s^{(h)}, h > j \text{ and } a_h \neq a^M_h \\ s^{(\overline{K}+1)} & \text{if} \quad h = \overline{K} - 1 \text{ or } h = \overline{K} \\ s_h & \text{otherwise} \end{cases}.$$

(ii) The reward distribution is given by

$$R^M_{h,k}(s_h, a_h) = \begin{cases} \text{Ber}\left(\frac{1}{2}\right), & \text{if} \quad h = \overline{K}, \\ 0, & \text{otherwise.} \end{cases}$$

Each model $M \in \mathcal{M}'$ is a uniform mixture of $\overline{K}$ MDPs $\{\mathbb{M}^M_1, \ldots, \mathbb{M}^M_{\overline{K}}\}$ as described above, parameterized by the action sequence $a^M_{1:\overline{K}}$. The model class $\mathcal{M}'$ is defined as the set of all such mixture models (one for each sequence in $\mathcal{A}^{\overline{K}}$, so that $|\mathcal{M}'| = A^{\overline{K}}$.

At the start of each episode, an MDP $\mathbb{M}^M_z$ is chosen by sampling $z \sim \text{Unif}([\overline{K}])$. The trajectory is then drawn by setting $s_1 = s^{(1)}$, and for $h = 1, \ldots, H$:

- $a_h = \pi_h(s_h)$.
- $r_h \sim R^M_{h,z}(s_h, a_h)$ and $s_{h+1} \sim P^M_{h,z}(\cdot \mid s_h, a_h)$.

Note that rewards can be non-zero only at layer $h = \overline{K}$. We receive a reward from $\text{Ber}\left(\frac{1}{2} + \Delta\right)$ only when $z = 1$ and the first $\overline{K}$ actions match $a^M_{1:\overline{K}}$, i.e. $a_{1:\overline{K}} = a^M_{1:\overline{K}}$.

For every other action sequence, the reward is sampled from $\mathrm{Ber}\big(\frac{1}{2}\big)$. Thus, for any policy π,

$$f^M(\pi) = \tfrac{1}{2} + \Delta \mathbb{I}\{\pi(s_{1:\overline{K}}) = a^M_{1:\overline{K}}\},$$

which implies that

$$f^M(\pi_M) - f^M(\pi) = \Delta(1 - \mathbb{I}\{\pi(s_{1:\overline{K}}) = a^M_{1:\overline{K}}\}). \tag{9.26}$$

Finally, we define the reference model $\overline{M}$. The model $\overline{M}$ is specified by $\big\{\{\mathcal{S}_h\}_{h=1}^{H+1}, \mathcal{A}, \mathbb{M}^{\overline{M}}\big\}$ where $\mathbb{M}^{\overline{M}}$ is a tabular MDP given by

$$\mathbb{M}^{\overline{M}} = \big\{\{\mathcal{S}_h\}_{h=1}^{H+1}, \mathcal{A}, P_h^{\overline{M}}, R_h^{\overline{M}}, \delta_{s^{(1)}}\big\}.$$

Here, the initial state s_1 is $s^{(1)}$ deterministically, and the transitions $P_{h,k}^{\overline{M}}$ and rewards $R_{h,k}^{\overline{M}}$ are as follows:

(i) Transitions are stochastic and independent of the chosen action. In particular, for each $h \le H$, the dynamics $P_h^{\overline{M}}$ are given by

$$P_h^{\overline{M}}(s_{h+1} \mid s_h, a_h) = \begin{cases} \frac{\overline{K}-h}{\overline{K}-h+1} & \text{if} \quad h \le \overline{K}, s_h = s^{(h)} \text{ and } s_{h+1} = s^{(h+1)} \\ \frac{1}{\overline{K}-h+1} & \text{if} \quad h \le \overline{K}, s_h = s^{(h)} \text{ and } s_{h+1} = s^{(\overline{K}+1)} \\ 1 & \text{if} \quad h \le \overline{K}, s_h \ne s^{(h)} \text{ and } s_h = s_{h+1} \\ 1 & \text{if} \quad h > \overline{K} \text{ and } s_h = s_{h+1} \\ 0 & \text{otherwise} \end{cases}.$$

(ii) The reward distribution is given by

$$R_h^{\overline{M}}(s_h, a_h) = \begin{cases} \mathrm{Ber}\big(\frac{1}{2}\big), & \text{if} \quad h = \overline{K}, \\ 0, & \text{otherwise.} \end{cases}.$$

Note that $\overline{M}$ can be thought of as a mixture of $\overline{K}$ identical tabular MDPs each given by $\mathbb{M}^{\overline{M}}$. Note that for any policy π, the rewards for any trajectory in $\overline{M}$ are sampled from $\mathrm{Ber}\big(\frac{1}{2}\big)$, and thus $f^{\overline{M}}(\pi) = \frac{1}{2}$ which implies that

$$f^{\overline{M}}(\pi_{\overline{M}}) - f^{\overline{M}}(\pi) = 0. \tag{9.27}$$

We define $\mathcal{M}'' = \mathcal{M}' \cup \{\overline{M}\} \subseteq \mathcal{M}$, and note that for any policy π, the distribution over the trajectories is identical in all mixture models in $\mathcal{M}''$. However, as mentioned before, the rewards in $\overline{M}$ are sampled from $\mathrm{Ber}\big(\frac{1}{2}\big)$ and for any $M \in \mathcal{M}'$, the rewards in M are sampled from $\mathrm{Ber}\big(\frac{1}{2} + \frac{\Delta}{\overline{M}}\mathbb{I}\big\{\pi(s_{1:\overline{K}}) = a^M_{1:\overline{K}}\big\}\big)$. Thus, for any policy π and $M \in \mathcal{M}'$,

$$\begin{aligned} D^2_{\mathsf{H}}\big(M(\pi), \overline{M}(\pi)\big) &= D^2_{\mathsf{H}}\Big(\mathrm{Ber}\Big(\tfrac{1}{2} + \tfrac{\Delta}{\overline{K}}\mathbb{I}\big\{\pi(s_{1:\overline{K}}) = a^M_{1:\overline{K}}\big\}\Big), \mathrm{Ber}\Big(\tfrac{1}{2}\Big)\Big) \\ &\leq 3\frac{\Delta^2}{\overline{K}^2} \cdot \mathbb{I}\{\pi(s_{1:\overline{K}}) = a^M_{1:\overline{K}}\}, \end{aligned} \tag{9.28}$$

where the last line uses Lemma 86.

The bounds in (9.26), (9.27) and (9.28) together imply that the model class $\mathcal{M}''$ is a $(\frac{\Delta}{\overline{K}}, 3\frac{\Delta^2}{\overline{K}^2}, 0)$-family in the sense of Definition 23, where for each $\pi \in \Pi$ and$M \in \mathcal{M}''$ we take

$$u^M(\pi) := \mathbb{I}\{\pi(s_{1:\overline{K}}) = a^M_{1:\overline{K}}\} \qquad \text{and} \qquad v^M(\pi) := \mathbb{I}\{\pi(s_{1:\overline{K}}) = a^M_{1:\overline{K}}\},$$

with $u^{\overline{M}}(\pi) := 1$ and $v^{\overline{M}}(\pi) := 0$. As a result, Lemma 85 implies that

$$\mathsf{dec}_\gamma(\mathcal{M}, \overline{M}) \geq \frac{\Delta}{2\overline{K}} - \frac{3\gamma\Delta^2}{\overline{K}^2 N},$$

for $N := A^{\overline{K}} + 1$. Setting $\Delta = \frac{\overline{K}N}{12\gamma}$ leads to the lower bound $\mathsf{dec}_\gamma(\mathcal{M}, \overline{M}) \geq \frac{N}{24\gamma}$. We conclude by noting that all $M \in \mathcal{M}''$ have $M \in \mathcal{M}_{\varepsilon_\gamma}\big(\overline{M}\big)$ with $\varepsilon_\gamma = \frac{N}{24\gamma}$, and thus the lower bound on the DEC also applies to the class $\mathcal{M}_{\varepsilon_\gamma}\big(\overline{M}\big)$. $\square$

Proof for Example 6. let $\mathcal{M}$ be the class of all tabular MDPs, and let $\mathcal{M}^{(K)}$ denote the set of all mixture models in which each $M \in \mathcal{M}^{(K)}$ is a mixture of K MDPs from $\mathcal{M}$. Additionally, define $\widetilde{\mathcal{M}} = \mathrm{co}(\mathcal{M})$, and note that $\mathcal{M}^{(K)} \subseteq \widetilde{\mathcal{M}}$ for all $K \geq 1$. For any $\varepsilon > 0$ and $\overline{M} \in \mathcal{M}^{(K)}$, we have that $\mathcal{M}_{\varepsilon}^{(k)}(\overline{M}) \subseteq \widetilde{\mathcal{M}}_{\varepsilon}(\overline{M})$, which implies that

$$\mathsf{dec}_{\gamma}(\widetilde{\mathcal{M}}_{\varepsilon}(\overline{M}), \overline{M}) \geq \mathsf{dec}_{\gamma}(\mathcal{M}_{\varepsilon}^{(K)}(\overline{M}), \overline{M}),$$

because $\mathsf{dec}_{\gamma}(\cdot, \overline{M})$ is a non-decreasing function with respect to inclusion. Using Lemma 87, it holds that for any $K \geq 1$ and $\gamma \geq A^{\min\{S-1,H,K\}}/6$, with $\varepsilon_{\gamma} := A^{\min\{S-1,H,K\}}/24\gamma$,

$$\mathsf{dec}_{\gamma}(\widetilde{\mathcal{M}}_{\varepsilon}(\overline{M}), \overline{M}) \geq \mathsf{dec}_{\gamma}(\mathcal{M}_{\varepsilon}^{(K)}(\overline{M}), \overline{M}) \geq \frac{A^{\min\{S-1,H,K\}}}{24\gamma}.$$

Setting $K = S$ above gives the desired lower bound. $\square$

CHAPTER 10

CONCLUSION AND FUTURE WORK

BIBLIOGRAPHY

Yasin Abbasi-Yadkori, Peter Bartlett, Kush Bhatia, Nevena Lazic, Csaba Szepesvari, and Gellért Weisz. Politex: Regret bounds for policy iteration using expert prediction. In *International Conference on Machine Learning*, pages 3692–3702. PMLR, 2019.

Jacob Abernethy, Elad Hazan, and Alexander Rakhlin. Competing in the dark: An efficient algorithm for bandit linear optimization. In *Proc. of the 21st Annual Conference on Learning Theory (COLT)*, 2008.

Alekh Agarwal, Martin J Wainwright, Peter L Bartlett, and Pradeep K Ravikumar. Information-theoretic lower bounds on the oracle complexity of convex optimization. In *Advances in Neural Information Processing Systems*, pages 1–9, 2009.

Alekh Agarwal, Nan Jiang, Sham M Kakade, and Wen Sun. Reinforcement learning: Theory and algorithms. *CS Dept., UW Seattle, Seattle, WA, USA, Tech. Rep*, pages 10–4, 2019.

Alekh Agarwal, Mikael Henaff, Sham Kakade, and Wen Sun. Pc-pg: Policy cover directed exploration for provable policy gradient learning. *Advances in Neural Information Processing Systems*, 33:13399–13412, 2020a.

Alekh Agarwal, Sham Kakade, Akshay Krishnamurthy, and Wen Sun. Flambe: Structural complexity and representation learning of low rank mdps. *arXiv preprint arXiv:2006.10814*, 2020b.

Alekh Agarwal, Sham M Kakade, Jason D Lee, and Gaurav Mahajan. On the theory of policy gradient methods: Optimality, approximation, and distribution shift. *Journal of Machine Learning Research*, 22(98):1–76, 2021a.

Alekh Agarwal, Sham M Kakade, Jason D Lee, and Gaurav Mahajan. On the theory of policy gradient methods: Optimality, approximation, and distribution shift. *J. Mach. Learn. Res.*, 22(98):1–76, 2021b.

Z Allen-Zhu, Y Li, and Y Liang. Learning and generalization in overparameterized neural networks, going beyond two layers. *Advances in neural information processing systems*, 2019a.

Zeyuan Allen-Zhu. Katyusha: The first direct acceleration of stochastic gradient methods. In *Proceedings of the 49th Annual ACM SIGACT Symposium on Theory of Computing*, pages 1200–1205. ACM, 2017.

Zeyuan Allen-Zhu. How to make the gradients small stochastically: Even faster convex and nonconvex sgd. In *Advances in Neural Information Processing Systems*, pages 1165–1175. 2018.

Zeyuan Allen-Zhu. Natasha 2: Faster Non-Convex Optimization Than SGD. *Advances in Neural Information Processing Systems*, 2018.

Zeyuan Allen-Zhu and Elad Hazan. Variance reduction for faster non-convex optimization. In *International Conference on Machine Learning*, pages 699–707, 2016.

Zeyuan Allen-Zhu and Yuanzhi Li. Can sgd learn recurrent neural networks with provable generalization? In *Proceedings of the 33rd International Conference on Neural Information Processing Systems*, 2019.

Zeyuan Allen-Zhu, Yuanzhi Li, and Zhao Song. On the convergence rate of training recurrent neural networks. *Advances in Neural Information Processing Systems*, 32, 2019b.

Zeyuan Allen-Zhu, Yuanzhi Li, and Zhao Song. A convergence theory for deep learning via over-parameterization. In *International Conference on Machine*

Learning, pages 242–252. PMLR, 2019c.

Noga Alon, Shai Ben-David, Nicolo Cesa-Bianchi, and David Haussler. Scale-sensitive dimensions, uniform convergence, and learnability. *Journal of the ACM*, 44:615–631, 1997.

Idan Amir, Tomer Koren, and Roi Livni. Sgd generalizes better than gd (and regularization doesn't help). *arXiv preprint arXiv:2102.01117*, 2021.

Yossi Arjevani, Yair Carmon, John C Duchi, Dylan J Foster, Ayush Sekhari, and Karthik Sridharan. Second-order information in non-convex stochastic optimization: Power and limitations. In *Conference on Learning Theory*, pages 242–299. PMLR, 2020.

Sanjeev Arora, Rong Ge, Tengyu Ma, and Ankur Moitra. Simple, efficient, and neural algorithms for sparse coding. In Peter Grünwald, Elad Hazan, and Satyen Kale, editors, *Proceedings of The 28th Conference on Learning Theory, COLT 2015, Paris, France, July 3-6, 2015*, 2015.

Sanjeev Arora, Nadav Cohen, and Elad Hazan. On the optimization of deep networks: Implicit acceleration by overparameterization. In *International Conference on Machine Learning*, pages 244–253. PMLR, 2018.

Sanjeev Arora, Nadav Cohen, Wei Hu, and Yuping Luo. Implicit regularization in deep matrix factorization. *Advances in Neural Information Processing Systems*, 32:7413–7424, 2019.

Hédy Attouch, Jérôme Bolte, Patrick Redont, and Antoine Soubeyran. Proximal alternating minimization and projection methods for nonconvex problems: An approach based on the kurdyka-Łojasiewicz inequality. *Mathematics of Operations Research*, 35(2):438–457, 2010. ISSN 0364765X, 15265471.

Jean-Yves Audibert and Sébastien Bubeck. Minimax policies for adversarial and

stochastic bandits. In *COLT*, volume 7, pages 1–122, 2009.

Peter Auer, Nicolo Cesa-Bianchi, Yoav Freund, and Robert E. Schapire. The nonstochastic multiarmed bandit problem. *SIAM Journal on Computing*, 32(1): 48–77, 2002.

Alex Ayoub, Zeyu Jia, Csaba Szepesvari, Mengdi Wang, and Lin Yang. Model-based reinforcement learning with value-targeted regression. In *International Conference on Machine Learning*, pages 463–474. PMLR, 2020.

Mohammad Gheshlaghi Azar, Ian Osband, and Rémi Munos. Minimax regret bounds for reinforcement learning. *arXiv preprint arXiv:1703.05449*, 2017.

Shahar Azulay, Edward Moroshko, Mor Shpigel Nacson, Blake E. Woodworth, Nathan Srebro, Amir Globerson, and Daniel Soudry. On the implicit bias of initialization shape: Beyond infinitesimal mirror descent. In Marina Meila and Tong Zhang, editors, *Proceedings of the 38th International Conference on Machine Learning, ICML 2021, 18-24 July 2021, Virtual Event*, volume 139 of *Proceedings of Machine Learning Research*, pages 468–477. PMLR, 2021.

Nikhil Bansal and Anupam Gupta. Potential-function proofs for first-order methods. *arXiv preprint arXiv:1712.04581*, 2017.

Peter L Bartlett, Olivier Bousquet, Shahar Mendelson, et al. Local rademacher complexities. *The Annals of Statistics*, 33(4):1497–1537, 2005.

Raef Bassily, Vitaly Feldman, Cristóbal Guzmán, and Kunal Talwar. Stability of stochastic gradient descent on nonsmooth convex losses. *Advances in Neural Information Processing Systems*, 33, 2020.

Jalaj Bhandari and Daniel Russo. Global optimality guarantees for policy gradient methods. *arXiv preprint arXiv:1906.01786*, 2019.

Yingjie Bi, Haixiang Zhang, and Javad Lavaei. Local and global linear convergence of general low-rank matrix recovery problems. In *Proceedings of the AAAI Conference on Artificial Intelligence*, volume 36, pages 10129–10137, 2022.

Léon Bottou and Olivier Bousquet. The tradeoffs of large-scale learning. *Optimization for machine learning*, page 351, 2011.

Ronen I Brafman and Moshe Tennenholtz. R-max-a general polynomial time algorithm for near-optimal reinforcement learning. *Journal of Machine Learning Research*, 3(Oct):213–231, 2002.

Gábor Braun, Cristóbal Guzmán, and Sebastian Pokutta. Lower bounds on the oracle complexity of nonsmooth convex optimization via information theory. *IEEE Transactions on Information Theory*, 63(7):4709–4724, 2017.

Jingjing Bu, Afshin Mesbahi, Maryam Fazel, and Mehran Mesbahi. Lqr through the lens of first order methods: Discrete-time case. *arXiv preprint arXiv:1907.08921*, 2019.

Sébastien Bubeck, Rémi Munos, Gilles Stoltz, and Csaba Szepesvári. X-armed bandits. *Journal of Machine Learning Research*, 12(5), 2011.

Sébastien Bubeck, Nicolo Cesa-Bianchi, and Sham M Kakade. Towards minimax policies for online linear optimization with bandit feedback. In *Conference on Learning Theory*, pages 41–1. JMLR Workshop and Conference Proceedings, 2012.

Sébastien Bubeck, Yin Tat Lee, and Ronen Eldan. Kernel-based methods for bandit convex optimization. In *Symposium on Theory of Computing*, 2017.

Sébastien Bubeck et al. Convex optimization: Algorithms and complexity. *Foundations and Trends® in Machine Learning*, 8(3-4):231–357, 2015.

Emmanuel J Candes, Xiaodong Li, and Mahdi Soltanolkotabi. Phase retrieval via wirtinger flow: Theory and algorithms. *IEEE Transactions on Information Theory*, 61(4):1985–2007, 2015.

Yair Carmon, John C Duchi, Oliver Hinder, and Aaron Sidford. Lower bounds for finding stationary points i. *arXiv preprint arXiv:1710.11606*, 2017a.

Yair Carmon, John C Duchi, Oliver Hinder, and Aaron Sidford. Lower bounds for finding stationary points ii: First-order methods. *arXiv preprint arXiv:1711.00841*, 2017b.

N. Cesa-Bianchi and G. Lugosi. *Prediction, Learning, and Games*. Cambridge University Press, 2006.

Sourav Chatterjee. Convergence of gradient descent for deep neural networks. *arXiv preprint arXiv:2203.16462*, 2022.

Niladri S. Chatterji, Philip M. Long, and Peter L. Bartlett. The interplay between implicit bias and benign overfitting in two-layer linear networks. *CoRR*, abs/2108.11489, 2021.

Yuxin Chen, Yuejie Chi, Jianqing Fan, and Cong Ma. Gradient descent with random initialization: Fast global convergence for nonconvex phase retrieval. *Mathematical Programming*, 176(1):5–37, 2019.

Lenaic Chizat and Francis Bach. A note on lazy training in supervised differentiable programming. 2018. URL http://arxiv.org/abs/1812.07956. cite arxiv:1812.07956.

Nello Cristianini, John Shawe-Taylor, et al. *An introduction to support vector machines and other kernel-based learning methods*. Cambridge university press, 2000.

Varsha Dani, Thomas P Hayes, and Sham Kakade. The price of bandit information for online optimization. 2007.

Amit Daniely, Sivan Sabato, Shai Ben-David, and Shai Shalev-Shwartz. Multiclass learnability and the ERM principle. In *Proceedings of the 24th Annual Conference on Learning Theory*, pages 207–232, 2011.

Chris Dann, Yishay Mansour, Mehryar Mohri, Ayush Sekhari, and Karthik Sridharan. Guarantees for epsilon-greedy reinforcement learning with function approximation. In *International Conference on Machine Learning*, pages 4666–4689. PMLR, 2022.

Christoph Dann and Emma Brunskill. Sample complexity of episodic fixed-horizon reinforcement learning. In *Advances in Neural Information Processing Systems*, pages 2818–2826, 2015.

Christoph Dann, Nan Jiang, Akshay Krishnamurthy, Alekh Agarwal, John Langford, and Robert E Schapire. On oracle-efficient PAC RL with rich observations. In *Advances in neural information processing systems*, pages 1422–1432, 2018.

Christoph Dann, Lihong Li, Wei Wei, and Emma Brunskill. Policy certificates: Towards accountable reinforcement learning. In *International Conference on Machine Learning*, pages 1507–1516. PMLR, 2019.

Christoph Dann, Yishay Mansour, Mehryar Mohri, Ayush Sekhari, and Karthik Sridharan. Reinforcement learning with feedback graphs. *Advances in Neural Information Processing Systems*, 33:16868–16878, 2020.

Assaf Dauber, Meir Feder, Tomer Koren, and Roi Livni. Can implicit bias explain generalization? stochastic convex optimization as a case study. *Advances in Neural Information Processing Systems*, 33, 2020.

Damek Davis and Dmitriy Drusvyatskiy. Complexity of finding near-stationary

points of convex functions stochastically. *arXiv preprint arXiv:1802.08556*, 2018.

Christopher De Sa, Christopher Re, and Kunle Olukotun. Global convergence of stochastic gradient descent for some non-convex matrix problems. In *International conference on machine learning*, pages 2332–2341. PMLR, 2015.

Sarah Dean, Horia Mania, Nikolai Matni, Benjamin Recht, and Stephen Tu. On the sample complexity of the linear quadratic regulator. *Foundations of Computational Mathematics*, 20(4):633–679, 2020.

Ofer Dekel, Ran Gilad-Bachrach, Ohad Shamir, and Lin Xiao. Optimal distributed online prediction using mini-batches. *Journal of Machine Learning Research*, 13 (Jan):165–202, 2012.

Omar Darwiche Domingues, Pierre Ménard, Emilie Kaufmann, and Michal Valko. Episodic reinforcement learning in finite mdps: Minimax lower bounds revisited. In *Algorithmic Learning Theory*, pages 578–598. PMLR, 2021.

Shi Dong, Benjamin Van Roy, and Zhengyuan Zhou. Provably efficient reinforcement learning with aggregated states. *arXiv preprint arXiv:1912.06366*, 2019.

Yoel Drori and Ohad Shamir. The complexity of finding stationary points with stochastic gradient descent. In *International Conference on Machine Learning*, pages 2658–2667. PMLR, 2020.

Simon Du, Akshay Krishnamurthy, Nan Jiang, Alekh Agarwal, Miroslav Dudik, and John Langford. Provably efficient RL with rich observations via latent state decoding. In *International Conference on Machine Learning*, pages 1665–1674. PMLR, 2019a.

Simon S Du, Xiyu Zhai, Barnabas Poczos, and Aarti Singh. Gradient descent provably optimizes over-parameterized neural networks. *arXiv preprint arXiv:1810.02054*, 2018.

Simon S Du, Sham M Kakade, Ruosong Wang, and Lin F Yang. Is a good representation sufficient for sample efficient reinforcement learning? *arXiv preprint arXiv:1910.03016*, 2019b.

Simon S Du, Yuping Luo, Ruosong Wang, and Hanrui Zhang. Provably efficient Q-learning with function approximation via distribution shift error checking oracle. In *Advances in Neural Information Processing Systems*, pages 8060–8070, 2019c.

Simon S Du, Sham M Kakade, Jason D Lee, Shachar Lovett, Gaurav Mahajan, Wen Sun, and Ruosong Wang. Bilinear classes: A structural framework for provable generalization in rl. *arXiv preprint arXiv:2103.10897*, 2021.

John Duchi, Elad Hazan, and Yoram Singer. Adaptive subgradient methods for online learning and stochastic optimization. *Journal of machine learning research*, 12(7), 2011.

Omer Elkabetz and Nadav Cohen. Continuous vs. discrete optimization of deep neural networks. *Advances in Neural Information Processing Systems*, 34, 2021.

Cong Fang, Chris Junchi Li, Zhouchen Lin, and Tong Zhang. Spider: Near-optimal non-convex optimization via stochastic path-integrated differential estimator. In *Advances in Neural Information Processing Systems*, pages 687–697, 2018.

Yuguang Fang, Kenneth A Loparo, and Xiangbo Feng. Inequalities for the trace of matrix product. *IEEE Transactions on Automatic Control*, 39(12):2489–2490, 1994.

Ilyas Fatkhullin and Boris Polyak. Optimizing static linear feedback: Gradient method. *SIAM Journal on Control and Optimization*, 59(5):3887–3911, 2021.

Uriel Feige, Prabhakar Raghavan, David Peleg, and Eli Upfal. Computing with noisy information. *SIAM Journal on Computing*, 23(5):1001–1018, 1994.

Vitaly Feldman. Generalization of erm in stochastic convex optimization: The dimension strikes back. *Advances in Neural Information Processing Systems*, 29, 2016.

Abraham D Flaxman, Adam Tauman Kalai, and H Brendan McMahan. Online convex optimization in the bandit setting: gradient descent without a gradient. In *Proceedings of the sixteenth annual ACM-SIAM symposium on Discrete algorithms*, pages 385–394, 2005.

Dylan J. Foster, Ayush Sekhari, Ohad Shamir, Nathan Srebro, Karthik Sridharan, and Blake Woodworth. The complexity of making the gradient small in stochastic convex optimization. *Proceedings of the Thirty-Second Conference on Learning Theory*, pages 1319–1345, 2019.

Dylan J Foster, Sham M Kakade, Jian Qian, and Alexander Rakhlin. The statistical complexity of interactive decision making. *arXiv preprint arXiv:2112.13487*, 2021.

Dylan J Foster, Alexander Rakhlin, Ayush Sekhari, and Karthik Sridharan. On the complexity of adversarial decision making. *arXiv preprint arXiv:2206.13063*, 2022.

Aurélien Garivier, Pierre Ménard, and Gilles Stoltz. Explore first, exploit next: The true shape of regret in bandit problems. *Mathematics of Operations Research*, 44(2):377–399, 2019.

Saeed Ghadimi and Guanghui Lan. Optimal stochastic approximation algorithms for strongly convex stochastic composite optimization i: A generic algorithmic framework. *SIAM Journal on Optimization*, 22(4):1469–1492, 2012.

Saeed Ghadimi and Guanghui Lan. Stochastic first-and zeroth-order methods for nonconvex stochastic programming. *SIAM Journal on Optimization*, 23(4):2341–

2368, 2013.

Saeed Ghadimi and Guanghui Lan. Accelerated gradient methods for nonconvex nonlinear and stochastic programming. *Math. Program.*, 156(1-2):59–99, 2016. doi: 10.1007/s10107-015-0871-8.

Suriya Gunasekar, Jason Lee, Daniel Soudry, and Nathan Srebro. Characterizing implicit bias in terms of optimization geometry. In *International Conference on Machine Learning*, pages 1832–1841. PMLR, 2018a.

Suriya Gunasekar, Jason D Lee, Daniel Soudry, and Nati Srebro. Implicit bias of gradient descent on linear convolutional networks. *Advances in Neural Information Processing Systems*, 31, 2018b.

Suriya Gunasekar, Blake Woodworth, Srinadh Bhojanapalli, Behnam Neyshabur, and Nathan Srebro. Implicit regularization in matrix factorization. In *2018 Information Theory and Applications Workshop (ITA)*, pages 1–10. IEEE, 2018c.

Suriya Gunasekar, Blake Woodworth, and Nathan Srebro. Mirrorless mirror descent: A natural derivation of mirror descent. In *International Conference on Artificial Intelligence and Statistics*, pages 2305–2313. PMLR, 2021.

Moritz Hardt and Tengyu Ma. Identity matters in deep learning. *International Conference on Learning Representations*, 2017.

Moritz Hardt, Tengyu Ma, and Benjamin Recht. Gradient descent learns linear dynamical systems. *Journal of Machine Learning Research*, 2018.

Elad Hazan. Introduction to online convex optimization. *Foundations and Trends® in Optimization*, 2(3-4):157–325, 2016.

Elad Hazan and Satyen Kale. Better algorithms for benign bandits. *Journal of Machine Learning Research*, 12(4), 2011.

Kaiming He, Xiangyu Zhang, Shaoqing Ren, and Jian Sun. Deep residual learning for image recognition. In *Proceedings of the IEEE conference on computer vision and pattern recognition*, pages 770–778, 2016.

Oliver Hinder, Aaron Sidford, and Nimit Sohoni. Near-optimal methods for minimizing star-convex functions and beyond. In *Conference on learning theory*, pages 1894–1938. PMLR, 2020.

Prateek Jain, Chi Jin, Sham Kakade, and Praneeth Netrapalli. Global convergence of non-convex gradient descent for computing matrix squareroot. In *Artificial Intelligence and Statistics*, pages 479–488. PMLR, 2017a.

Prateek Jain, Purushottam Kar, et al. Non-convex optimization for machine learning. *Foundations and Trends® in Machine Learning*, 10(3-4):142–363, 2017b.

Thomas Jaksch, Ronald Ortner, and Peter Auer. Near-optimal regret bounds for reinforcement learning. *Journal of Machine Learning Research*, 11(Apr):1563–1600, 2010.

Ziwei Ji and Matus Telgarsky. Risk and parameter convergence of logistic regression. *arXiv preprint arXiv:1803.07300*, 2018.

Nan Jiang, Akshay Krishnamurthy, Alekh Agarwal, John Langford, and Robert E Schapire. Contextual decision processes with low bellman rank are pac-learnable. In *Proceedings of the 34th International Conference on Machine Learning-Volume 70*, pages 1704–1713. JMLR. org, 2017.

Chi Jin, Sham M Kakade, and Praneeth Netrapalli. Provable efficient online matrix completion via non-convex stochastic gradient descent. *Advances in Neural Information Processing Systems*, 29, 2016a.

Chi Jin, Sham M. Kakade, and Praneeth Netrapalli. Provable efficient online matrix completion via non-convex stochastic gradient descent. In *NIPS*, 2016b.

Chi Jin, Rong Ge, Praneeth Netrapalli, Sham M. Kakade, and Michael I. Jordan. How to escape saddle points efficiently. In *Proceedings of the 34th International Conference on Machine Learning*, pages 1724–1732, 2017.

Chi Jin, Zhuoran Yang, Zhaoran Wang, and Michael I Jordan. Provably efficient reinforcement learning with linear function approximation. In *Conference on Learning Theory*, pages 2137–2143, 2020.

Chi Jin, Qinghua Liu, and Sobhan Miryoosefi. Bellman eluder dimension: New rich classes of RL problems, and sample-efficient algorithms. *Neural Information Processing Systems*, 2021.

Tiancheng Jin and Haipeng Luo. Learning adversarial markov decision processes with bandit feedback and unknown transition. *arXiv preprint arXiv:1912.01192*, 2019.

Tiancheng Jin and Haipeng Luo. Simultaneously learning stochastic and adversarial episodic MDPs with known transition. *Advances in neural information processing systems*, 33:16557–16566, 2020.

Sham Kakade and John Langford. Approximately optimal approximate reinforcement learning. In *In Proc. 19th International Conference on Machine Learning*. Citeseer, 2002.

Sham M Kakade. A natural policy gradient. *Advances in neural information processing systems*, 14, 2001.

Sham M. Kakade, Karthik Sridharan, and Ambuj Tewari. On the complexity of linear prediction: Risk bounds, margin bounds, and regularization. In *Advances in Neural Information Processing Systems 21*, pages 793–800. MIT Press, 2009.

Sham M Kakade, Varun Kanade, Ohad Shamir, and Adam Kalai. Efficient learning of generalized linear and single index models with isotonic regression. In

Advances in Neural Information Processing Systems, pages 927–935, 2011.

Sham M Kakade, Shai Shalev-Shwartz, and Ambuj Tewari. Regularization techniques for learning with matrices. *Journal of Machine Learning Research*, 13 (Jun):1865–1890, 2012.

Satyen Kale, Ayush Sekhari, and Karthik Sridharan. SGD: the role of implicit regularization, batch-size and multiple-epochs. In *Advances in Neural Information Processing Systems 34: Annual Conference on Neural Information Processing Systems 2021, NeurIPS 2021, December 6-14, 2021, virtual*, pages 27422–27433, 2021.

Hamed Karimi, Julie Nutini, and Mark Schmidt. Linear convergence of gradient and proximal-gradient methods under the polyak-łojasiewicz condition. In *Joint European Conference on Machine Learning and Knowledge Discovery in Databases*, pages 795–811. Springer, 2016a.

Hamed Karimi, Julie Nutini, and Mark Schmidt. Linear convergence of gradient and proximal-gradient methods under the polyak-łojasiewicz condition. In *European Conference on Machine Learning and Knowledge Discovery in Databases - Volume 9851*, ECML PKDD 2016, page 795–811, Berlin, Heidelberg, 2016b. Springer-Verlag. ISBN 9783319461274. doi: 10.1007/978-3-319-46128-1_50.

Richard M Karp and Robert Kleinberg. Noisy binary search and its applications. In *Proceedings of the eighteenth annual ACM-SIAM symposium on Discrete algorithms*, pages 881–890. Society for Industrial and Applied Mathematics, 2007.

Michael Kearns and Satinder Singh. Near-optimal reinforcement learning in polynomial time. *Machine learning*, 49(2-3):209–232, 2002.

Michael J Kearns, Yishay Mansour, and Andrew Y Ng. Approximate planning in large pomdps via reusable trajectories. In *Advances in Neural Information*

Processing Systems, pages 1001–1007, 2000.

Christopher M. Kellett. Classical converse theorems in lyapunov's second method. *Discrete and Continuous Dynamical Systems - B*, 20(8):2333–2360, 2015.

Nitish Shirish Keskar, Jorge Nocedal, Ping Tak Peter Tang, Dheevatsa Mudigere, and Mikhail Smelyanskiy. On large-batch training for deep learning: Generalization gap and sharp minima. In *5th International Conference on Learning Representations, ICLR 2017*, 2017.

Diederik P Kingma and Jimmy Ba. Adam: A method for stochastic optimization. *arXiv preprint arXiv:1412.6980*, 2014.

Johannes Kirschner. *Information-Directed Sampling-Frequentist Analysis and Applications*. PhD thesis, ETH Zurich, 2021.

Johannes Kirschner, Tor Lattimore, and Andreas Krause. Information directed sampling for linear partial monitoring. In *Conference on Learning Theory*, pages 2328–2369. PMLR, 2020.

Johannes Kirschner, Tor Lattimore, Claire Vernade, and Csaba Szepesvári. Asymptotically optimal information-directed sampling. In *Conference on Learning Theory*, pages 2777–2821. PMLR, 2021.

Bobby Kleinberg, Yuanzhi Li, and Yang Yuan. An alternative view: When does sgd escape local minima? In *International Conference on Machine Learning*, pages 2698–2707. PMLR, 2018a.

Robert Kleinberg. Nearly tight bounds for the continuum-armed bandit problem. *Advances in Neural Information Processing Systems*, 17:697–704, 2004.

Robert Kleinberg, Yuanzhi Li, and Yang Yuan. An alternative view: When does sgd escape local minima? In Jennifer G. Dy and Andreas Krause, editors,

ICML, volume 80 of *Proceedings of Machine Learning Research*, pages 2703–2712. PMLR, 2018b.

Walid Krichene. Continuous and discrete dynamics for online learning and convex optimization. *Ph. D. Dissertation*, 2016a.

Walid Krichene. *A Lyapunov Approach to Accelerated First-Order Optimization In Continuous and Discrete Time*. PhD thesis, University of California, Berkeley, 2016b.

Walid Krichene, Alexandre Bayen, and Peter L Bartlett. Accelerated mirror descent in continuous and discrete time. In C. Cortes, N. Lawrence, D. Lee, M. Sugiyama, and R. Garnett, editors, *Advances in Neural Information Processing Systems*, volume 28. Curran Associates, Inc., 2015.

Akshay Krishnamurthy, Alekh Agarwal, and John Langford. Pac reinforcement learning with rich observations. In *Advances in Neural Information Processing Systems*, pages 1840–1848, 2016.

Alex Krizhevsky, Ilya Sutskever, and Geoffrey E Hinton. Imagenet classification with deep convolutional neural networks. In *Advances in neural information processing systems*, pages 1097–1105, 2012.

Krzysztof Kurdyka. On gradients of functions definable in o-minimal structures. *Annales de l'institut Fourier*, 48(3):769–783, 1998.

Jeongyeol Kwon, Yonathan Efroni, Constantine Caramanis, and Shie Mannor. RL for latent MDPs: Regret guarantees and a lower bound. *Advances in Neural Information Processing Systems*, 34, 2021.

Tor Lattimore. Improved regret for zeroth-order adversarial bandit convex optimisation. *Mathematical Statistics and Learning*, 2(3):311–334, 2020.

Tor Lattimore. Minimax regret for bandit convex optimisation of ridge functions. *arXiv preprint arXiv:2106.00444*, 2021.

Tor Lattimore. Minimax regret for partial monitoring: Infinite outcomes and rustichini's regret. *arXiv preprint arXiv:2202.10997*, 2022.

Tor Lattimore and Andras György. Mirror descent and the information ratio. In *Conference on Learning Theory*, pages 2965–2992. PMLR, 2021.

Tor Lattimore and Marcus Hutter. Pac bounds for discounted mdps. In *International Conference on Algorithmic Learning Theory*, pages 320–334. Springer, 2012.

Tor Lattimore and Csaba Szepesvári. An information-theoretic approach to minimax regret in partial monitoring. In *Conference on Learning Theory*, pages 2111–2139. PMLR, 2019.

Tor Lattimore and Csaba Szepesvári. *Bandit algorithms*. Cambridge University Press, 2020a.

Tor Lattimore and Csaba Szepesvári. Exploration by optimisation in partial monitoring. In *Conference on Learning Theory*, pages 2488–2515. PMLR, 2020b.

Michel Ledoux and Michel Talagrand. *Probability in Banach Spaces*. Springer-Verlag, New York, 1991.

Lihua Lei, Cheng Ju, Jianbo Chen, and Michael I Jordan. Non-convex finite-sum optimization via scsg methods. In *Advances in Neural Information Processing Systems*, pages 2348–2358, 2017.

Sergey Levine and Vladlen Koltun. Guided policy search. In *International conference on machine learning*, pages 1–9. PMLR, 2013.

Lihong Li. *A unifying framework for computational reinforcement learning theory*.

Rutgers, The State University of New Jersey—New Brunswick, 2009.

Xiaodong Li, Shuyang Ling, Thomas Strohmer, and Ke Wei. Rapid, robust, and reliable blind deconvolution via nonconvex optimization. *Applied and Computational Harmonic Analysis*, 2018.

Yuanzhi Li and Yang Yuan. Convergence analysis of two-layer neural networks with relu activation. In *Advances in Neural Information Processing Systems*, pages 597–607, 2017.

Huikang Liu, Weijie Wu, and Anthony Man-Cho So. Quadratic optimization with orthogonality constraints: Explicit lojasiewicz exponent and linear convergence of line-search methods. In *Proceedings of The 33rd International Conference on Machine Learning*, volume 48 of *PMLR*, pages 1158–1167, 2016.

Qiang Liu, Lihong Li, Ziyang Tang, and Dengyong Zhou. Breaking the curse of horizon: Infinite-horizon off-policy estimation. *arXiv preprint arXiv:1810.12429*, 2018.

Qinghua Liu, Yuanhao Wang, and Chi Jin. Learning markov games with adversarial opponents: Efficient algorithms and fundamental limits. *arXiv preprint arXiv:2203.06803*, 2022.

Yanli Liu, Kaiqing Zhang, Tamer Basar, and Wotao Yin. An improved analysis of (variance-reduced) policy gradient and natural policy gradient methods. *Advances in Neural Information Processing Systems*, 33, 2020.

Stanislaw Lojasiewicz. A topological property of real analytic subsets. *Coll. du CNRS, Les équations aux dérivées partielles*, 117(87-89):2, 1963.

Jihao Long, Jiequn Han, and Weinan E. An l2 analysis of reinforcement learning in high dimensions with kernel and neural network approximation. *arXiv preprint arXiv:2104.07794*, 2021.

Cong Ma, Kaizheng Wang, Yuejie Chi, and Yuxin Chen. Implicit regularization in nonconvex statistical estimation: Gradient descent converges linearly for phase retrieval and matrix completion. In *International Conference on Machine Learning*, pages 3345–3354. PMLR, 2018a.

Siyuan Ma, Raef Bassily, and Mikhail Belkin. The power of interpolation: Understanding the effectiveness of sgd in modern over-parametrized learning. In *International Conference on Machine Learning*, pages 3325–3334. PMLR, 2018b.

Stefan Magureanu, Richard Combes, and Alexandre Proutiere. Lipschitz bandits: Regret lower bound and optimal algorithms. In *Conference on Learning Theory*, pages 975–999. PMLR, 2014.

Pascal Massart. *Concentration inequalities and model selection*, volume 10. Springer, 2007.

Jiří Matoušek and Jan Vondrák. The probabilistic method. *Lecture Notes, Department of Applied Mathematics, Charles University, Prague*, 2001.

Andreas Maurer. A vector-contraction inequality for rademacher complexities. In *International Conference on Algorithmic Learning Theory*, pages 3–17. Springer, 2016.

Jincheng Mei, Chenjun Xiao, Csaba Szepesvari, and Dale Schuurmans. On the global convergence rates of softmax policy gradient methods. In *International Conference on Machine Learning*, pages 6820–6829. PMLR, 2020.

Jincheng Mei, Yue Gao, Bo Dai, Csaba Szepesvari, and Dale Schuurmans. Leveraging non-uniformity in first-order non-convex optimization. In *International Conference on Machine Learning*, pages 7555–7564. PMLR, 2021.

Song Mei, Yu Bai, and Andrea Montanari. The landscape of empirical risk for non-convex losses. *To appear in Annals of Statistics*, 2016.

Raghu Meka, Prateek Jain, Constantine Caramanis, and Inderjit S Dhillon. Rank minimization via online learning. In *Proceedings of the 25th International Conference on Machine learning*, pages 656–663, 2008.

Dipendra Misra, Mikael Henaff, Akshay Krishnamurthy, and John Langford. Kinematic state abstraction and provably efficient rich-observation reinforcement learning. In *International conference on machine learning*, pages 6961–6971. PMLR, 2020.

Volodymyr Mnih, Koray Kavukcuoglu, David Silver, Andrei A Rusu, Joel Veness, Marc G Bellemare, Alex Graves, Martin Riedmiller, Andreas K Fidjeland, Georg Ostrovski, et al. Human-level control through deep reinforcement learning. *Nature*, 518(7540):529, 2015.

Aditya Modi, Nan Jiang, Ambuj Tewari, and Satinder Singh. Sample complexity of reinforcement learning using linearly combined model ensembles. In *International Conference on Artificial Intelligence and Statistics*, pages 2010–2020. PMLR, 2020.

Aditya Modi, Jinglin Chen, Akshay Krishnamurthy, Nan Jiang, and Alekh Agarwal. Model-free representation learning and exploration in low-rank mdps. *arXiv preprint arXiv:2102.07035*, 2021.

Hesameddin Mohammadi, Armin Zare, Mahdi Soltanolkotabi, and Mihailo R Jovanović. Global exponential convergence of gradient methods over the nonconvex landscape of the linear quadratic regulator. In *2019 IEEE 58th Conference on Decision and Control (CDC)*, pages 7474–7479. IEEE, 2019.

Katta G Murty and Santosh N Kabadi. Some np-complete problems in quadratic and nonlinear programming. Technical report, 1985.

Ofir Nachum, Yinlam Chow, Bo Dai, and Lihong Li. Dualdice: Behavior-agnostic

estimation of discounted stationary distribution corrections. *arXiv preprint arXiv:1906.04733*, 2019.

A Nemirovski, A Juditsky, G Lan, and A Shapiro. Stochastic approximation approach to stochastic programming. In *SIAM J. Optim*. Citeseer.

Arkadi Semenovič Nemirovski and David Borisovich Yudin. Problem complexity and method efficiency in optimization. 1983a.

Arkadii Semenovich Nemirovski and David Borisovich Yudin. Problem complexity and method efficiency in optimization. 1983b.

Yurii Nesterov. Introductory lectures on convex optimization: a basic course. 2004.

Yurii Nesterov. How to make the gradients small. *Optima*, 88:10–11, 2012.

Yurii Nesterov. *Introductory lectures on convex optimization: A basic course*, volume 87. Springer Science & Business Media, 2013.

Yurii Nesterov. *Introductory Lectures on Convex Optimization: A Basic Course*. Springer Publishing Company, Incorporated, 1 edition, 2014. ISBN 1461346916.

Gergely Neu, András György, Csaba Szepesvári, et al. The online loop-free stochastic shortest-path problem. In *COLT*, volume 2010, pages 231–243. Citeseer, 2010.

Gergely Neu, András György, Csaba Szepesvári, and András Antos. Online Markov decision processes under bandit feedback. *IEEE Transactions on Automatic Control*, 59:676–691, 2014.

Ian Osband and Benjamin Van Roy. Model-based reinforcement learning and the eluder dimension. In *Advances in Neural Information Processing Systems*, pages 1466–1474, 2014.

Dmitriy Panchenko. Some extensions of an inequality of vapnik and chervonenkis. *Electronic Communications in Probability*, 7:55–65, 2002.

Barak A Pearlmutter. Fast exact multiplication by the Hessian. *Neural computation*, 6(1):147–160, 1994.

Iosif Pinelis. Optimum bounds for the distributions of martingales in banach spaces. *The Annals of Probability*, 22(4):1679–1706, 1994.

Gilles Pisier. Martingales with values in uniformly convex spaces. *Israel Journal of Mathematics*, 20:326–350, 1975. ISSN 0021-2172.

Tomaso Poggio, Sasha Rakhlin, Andrea Caponnetto, and Ryan Rifkin. Statistical learning theory and applications, 2012.

Boris Teodorovich Polyak. Gradient methods for minimizing functionals. *Zhurnal Vychislitel'noi Matematiki i Matematicheskoi Fiziki*, 3(4):643–653, 1963a.

B.T. Polyak. Gradient methods for the minimisation of functionals. *USSR Computational Mathematics and Mathematical Physics*, 3(4):864–878, 1963b. ISSN 0041-5553.

Yury Polyanskiy. Information theoretic methods in statistics and computer science. 2020. URL https://people.lids.mit.edu/yp/homepage/sdpi_course.html.

Yury Polyanskiy and Yihong Wu. Lecture notes on information theory. 2014.

Alexander Rakhlin, Karthik Sridharan, and Ambuj Tewari. Online learning: Random averages, combinatorial parameters, and learnability. *Advances in Neural Information Processing Systems 23*, pages 1984–1992, 2010.

Garvesh Raskutti, Martin J Wainwright, and Bin Yu. Restricted eigenvalue properties for correlated gaussian designs. *Journal of Machine Learning Research*, 11: 2241–2259, 2010.

Noam Razin and Nadav Cohen. Implicit regularization in deep learning may not be explainable by norms. *Advances in Neural Information Processing Systems*,

33, 2020.

Sashank J. Reddi, Ahmed Hefny, Suvrit Sra, Barnabás Póczós, and Alex Smola. Stochastic variance reduction for nonconvex optimization. In *Proceedings of the 33rd International Conference on International Conference on Machine Learning*, pages 314–323, 2016a.

Sashank J Reddi, Ahmed Hefny, Suvrit Sra, Barnabas Poczos, and Alex Smola. Stochastic variance reduction for nonconvex optimization. In *International conference on machine learning*, pages 314–323, 2016b.

Daniel Russo and Benjamin Van Roy. Eluder dimension and the sample complexity of optimistic exploration. In *Advances in Neural Information Processing Systems*, pages 2256–2264, 2013.

Daniel Russo and Benjamin Van Roy. Learning to optimize via posterior sampling. *Mathematics of Operations Research*, 39(4):1221–1243, 2014.

Daniel Russo and Benjamin Van Roy. Learning to optimize via information-directed sampling. *Operations Research*, 66(1):230–252, 2018.

John Schulman, Sergey Levine, Pieter Abbeel, Michael Jordan, and Philipp Moritz. Trust region policy optimization. In *International conference on machine learning*, pages 1889–1897. PMLR, 2015.

John Schulman, Filip Wolski, Prafulla Dhariwal, Alec Radford, and Oleg Klimov. Proximal policy optimization algorithms. *arXiv preprint arXiv:1707.06347*, 2017.

J Segercrantz. Improving the cayley-hamilton equation for low-rank transformations. *The American mathematical monthly*, 99(1):42–44, 1992.

Ayush Sekhari, Jayadev Acharya, Gautam Kamath, and Ananda Theertha Suresh. Remember what you want to forget: Algorithms for machine unlearning. *Ad-*

vances in Neural Information Processing Systems, 34:18075–18086, 2021a.

Ayush Sekhari, Christoph Dann, Mehryar Mohri, Yishay Mansour, and Karthik Sridharan. Agnostic reinforcement learning with low-rank MDPs and rich observations. *Advances in Neural Information Processing Systems*, 34, 2021b.

Ayush Sekhari, Karthik Sridharan, and Satyen Kale. Sgd: The role of implicit regularization, batch-size and multiple-epochs. *Advances In Neural Information Processing Systems*, 34:27422–27433, 2021c.

Devavrat Shah, Dogyoon Song, Zhi Xu, and Yuzhe Yang. Sample efficient reinforcement learning via low-rank matrix estimation. *arXiv preprint arXiv:2006.06135*, 2020.

S. Shalev-Shwartz, Y. Singer, and N. Srebro. Pegasos: Primal Estimated sub-GrAdient SOlver for SVM. pages 807–814, 2007.

Shai Shalev-Shwartz, Ohad Shamir, Nathan Srebro, and Karthik Sridharan. Stochastic convex optimization. In *COLT*, volume 2, page 5, 2009.

Shai Shalev-Shwartz, Ohad Shamir, Nathan Srebro, and Karthik Sridharan. Learnability, stability and uniform convergence. *The Journal of Machine Learning Research*, 11:2635–2670, 2010.

Shai Shalev-Shwartz, Yoram Singer, Nathan Srebro, and Andrew Cotter. Pegasos: Primal estimated sub-gradient solver for svm. *Mathematical programming*, 127 (1):3–30, 2011.

David Silver, Thomas Hubert, Julian Schrittwieser, Ioannis Antonoglou, Matthew Lai, Arthur Guez, Marc Lanctot, Laurent Sifre, Dharshan Kumaran, Thore Graepel, et al. A general reinforcement learning algorithm that masters chess, shogi, and go through self-play. *Science*, 362(6419):1140–1144, 2018.

Maurice Sion. On general minimax theorems. *Pacific J. Math.*, 8:171–176, 1958.

Daniel Soudry, Elad Hoffer, Mor Shpigel Nacson, Suriya Gunasekar, and Nathan Srebro. The implicit bias of gradient descent on separable data. *The Journal of Machine Learning Research*, 19(1):2822–2878, 2018.

Nathan Srebro, Karthik Sridharan, and Ambuj Tewari. Smoothness, low noise and fast rates. In J. Lafferty, C. Williams, J. Shawe-Taylor, R. Zemel, and A. Culotta, editors, *Advances in Neural Information Processing Systems*, volume 23. Curran Associates, Inc., 2010. URL https://proceedings.neurips.cc/paper/2010/file/76cf99d3614e23eabab16fb27e944bf9-Paper.pdf.

Weijie Su, Stephen Boyd, and Emmanuel Candes. A differential equation for modeling nesterov's accelerated gradient method: theory and insights. *Advances in neural information processing systems*, 27, 2014.

Wen Sun, Nan Jiang, Akshay Krishnamurthy, Alekh Agarwal, and John Langford. Model-based RL in contextual decision processes: PAC bounds and exponential improvements over model-free approaches. In *Conference on learning theory*, pages 2898–2933. PMLR, 2019.

Yan Shuo Tan and Roman Vershynin. Online stochastic gradient descent with arbitrary initialization solves non-smooth, non-convex phase retrieval. *arXiv preprint arXiv:1910.12837*, 2019.

Ambuj Tewari and Susan A Murphy. From ads to interventions: Contextual bandits in mobile health. In *Mobile Health*, pages 495–517. Springer, 2017.

Robert Tibshirani, Martin Wainwright, and Trevor Hastie. *Statistical learning with sparsity: the lasso and generalizations*. Chapman and Hall/CRC, 2015.

Joseph F Traub, Grzegorz W Wasilkowski, and Henryk Woźniakowski. Information-based complexity. 1988.

Alexandre B Tsybakov. *Introduction to Nonparametric Estimation*. Springer Science & Business Media, 2008.

Masatoshi Uehara, Ayush Sekhari, Jason D Lee, Nathan Kallus, and Wen Sun. Computationally efficient pac rl in pomdps with latent determinism and conditional embeddings. *arXiv preprint arXiv:2206.12081*, 2022a.

Masatoshi Uehara, Ayush Sekhari, Jason D Lee, Nathan Kallus, and Wen Sun. Provably efficient reinforcement learning in partially observable dynamical systems. *arXiv preprint arXiv:2206.12020*, 2022b.

Vladimir Vapnik. *The nature of statistical learning theory*. Springer science & business media, 2013.

Vladimir N Vapnik. The nature of statistical learning theory. 1995.

Gal Vardi and Ohad Shamir. Implicit regularization in relu networks with the square loss. In *Conference on Learning Theory*, pages 4224–4258. PMLR, 2021.

Oriol Vinyals, Igor Babuschkin, Wojciech M Czarnecki, Michaël Mathieu, Andrew Dudzik, Junyoung Chung, David H Choi, Richard Powell, Timo Ewalds, Petko Georgiev, et al. Grandmaster level in starcraft ii using multi-agent reinforcement learning. *Nature*, 575(7782):350–354, 2019.

Ruosong Wang, Dean P Foster, and Sham M Kakade. What are the statistical limits of offline rl with linear function approximation? *arXiv preprint arXiv:2010.11895*, 2020a.

Ruosong Wang, Russ R Salakhutdinov, and Lin Yang. Reinforcement learning with general value function approximation: Provably efficient approach via bounded eluder dimension. *Advances in Neural Information Processing Systems*, 33, 2020b.

Ruosong Wang, Russ R Salakhutdinov, and Lin Yang. Reinforcement learning with general value function approximation: Provably efficient approach via bounded eluder dimension. *Advances in Neural Information Processing Systems*, 33, 2020c.

Yining Wang, Ruosong Wang, Simon S Du, and Akshay Krishnamurthy. Optimism in reinforcement learning with generalized linear function approximation. *arXiv preprint arXiv:1912.04136*, 2019.

Zhilei Wang, Pranjal Awasthi, Christoph Dann, Ayush Sekhari, and Claudio Gentile. Neural active learning with performance guarantees. *Advances in Neural Information Processing Systems*, 34:7510–7521, 2021.

Gellért Weisz, Philip Amortila, and Csaba Szepesvári. Exponential lower bounds for planning in MDPs with linearly-realizable optimal action-value functions. In *Algorithmic Learning Theory*, pages 1237–1264. PMLR, 2021.

Ashia Wilson. *Lyapunov arguments in optimization*. University of California, Berkeley, 2018.

Ashia C. Wilson, Ben Recht, and Michael I. Jordan. A lyapunov analysis of accelerated methods in optimization. *Journal of Machine Learning Research*, 22 (113):1–34, 2021a.

Ashia C Wilson, Ben Recht, and Michael I Jordan. A lyapunov analysis of accelerated methods in optimization. *Journal of Machine Learning Research*, 22(113): 1–34, 2021b.

Stephan Wojtowytsch. Stochastic gradient descent with noise of machine learning type. part i: Discrete time analysis. *arXiv preprint arXiv:2105.01650*, 2021a.

Stephan Wojtowytsch. Stochastic gradient descent with noise of machine learning type. part ii: Continuous time analysis. *arXiv preprint arXiv:2106.02588*, 2021b.

Blake Woodworth and Nati Srebro. Tight complexity bounds for optimizing composite objectives. In *Advances in Neural Information Processing Systems 29*, pages 3639–3647. 2016.

Blake Woodworth, Jialei Wang, Brendan McMahan, and Nathan Srebro. Graph oracle models, lower bounds, and gaps for parallel stochastic optimization. In *Advances in Neural Information Processing Systems 31*, pages 8505–8515, 2018.

Lin Yang and Mengdi Wang. Sample-optimal parametric Q-learning using linearly additive features. In *International Conference on Machine Learning*, pages 6995–7004. PMLR, 2019.

Lin Yang and Mengdi Wang. Reinforcement learning in feature space: Matrix bandit, kernels, and regret bound. In *International Conference on Machine Learning*, pages 10746–10756. PMLR, 2020.

Zhuoran Yang, Chi Jin, Zhaoran Wang, Mengdi Wang, and Michael I Jordan. On function approximation in reinforcement learning: Optimism in the face of large state spaces. *arXiv preprint arXiv:2011.04622*, 2020.

Rui Yuan, Robert M Gower, and Alessandro Lazaric. A general sample complexity analysis of vanilla policy gradient. In *International Conference on Artificial Intelligence and Statistics*, pages 3332–3380. PMLR, 2022.

Andrea Zanette. Exponential lower bounds for batch reinforcement learning: Batch rl can be exponentially harder than online rl. *arXiv preprint arXiv:2012.08005*, 2020.

Jinshan Zeng, Shikang Ouyang, Tim Tsz-Kit Lau, Shaobo Lin, and Yuan Yao. Global convergence in deep learning with variable splitting via the kurdyka-łojasiewicz property. *arXiv preprint arXiv:1803.00225*, 9, 2018.

Chiyuan Zhang, Samy Bengio, Moritz Hardt, Benjamin Recht, and Oriol Vinyals.

Understanding deep learning (still) requires rethinking generalization. *Communications of the ACM*, 64(3):107–115, 2021a.

Chiyuan Zhang, Samy Bengio, Moritz Hardt, Benjamin Recht, and Oriol Vinyals. Understanding deep learning (still) requires rethinking generalization. *Communications of the ACM*, 64(3):107–115, 2021b.

Huishuai Zhang, Yuejie Chi, and Yingbin Liang. Median-truncated nonconvex approach for phase retrieval with outliers. *International Conference on Machine Learning*, 2016.

Peiyuan Zhang, Antonio Orvieto, Hadi Daneshmand, Thomas Hofmann, and Roy S Smith. Revisiting the role of euler numerical integration on acceleration and stability in convex optimization. In *International Conference on Artificial Intelligence and Statistics*, pages 3979–3987. PMLR, 2021c.

Tong Zhang. From ϵ-entropy to KL-entropy: Analysis of minimum information complexity density estimation. *The Annals of Statistics*, 34(5):2180–2210, 2006.

Dongruo Zhou, Pan Xu, and Quanquan Gu. Stochastic nested variance reduced gradient descent for nonconvex optimization. In *Advances in Neural Information Processing Systems 31*, pages 3925–3936. 2018.

Dongruo Zhou, Quanquan Gu, and Csaba Szepesvari. Nearly minimax optimal reinforcement learning for linear mixture markov decision processes. In *Conference on Learning Theory*, pages 4532–4576. PMLR, 2021.

Yi Zhou, Junjie Yang, Huishuai Zhang, Yingbin Liang, and Vahid Tarokh. Sgd converges to global minimum in deep learning via star-convex path. *arXiv preprint arXiv:1901.00451*, 2019.

Alexander Zimin and Gergely Neu. Online learning in episodic markovian decision processes by relative entropy policy search. *Advances in neural information*

processing systems, 26, 2013.