High Precision Bandgap Reference Voltage

Aleksandar Vuković

March 24, 2026

Abstract

Includes specifications for the block. Different topologies for Bandgap and Operational Transconductance Amplifier.

Keywords: high precision, trimming, Kuijk, Brokaw, Tsividis, bandgap, voltage reference, OTA

1 Topology classification

There are three basic types of Bandgap Voltage References based on

- Kuijk Bandgap
- Brokaw Bandgap
- Tsividis Bandgap

1.1 Kuijk Bandgap

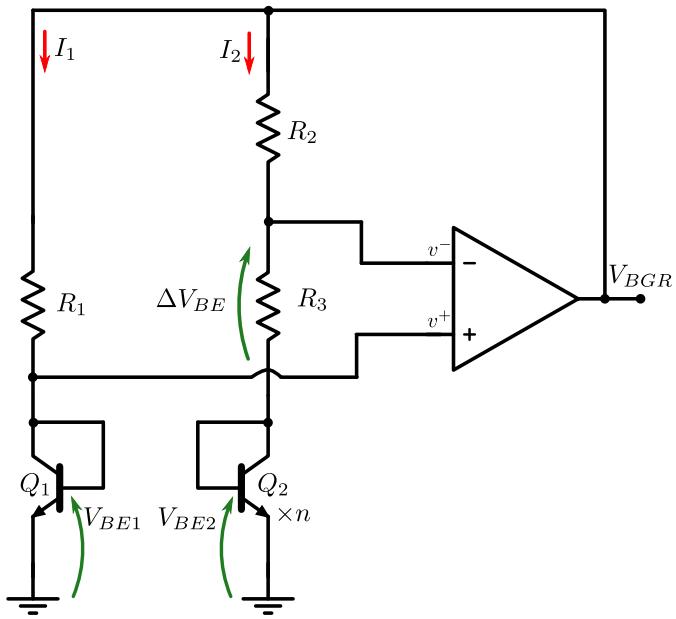

Figure 1: Kuijk Bandgap Reference Voltage

This design is based on Kuijk's paper from 1972.

$$I_{C1} = I_{s1}(e^{V_{BE1}/V_T} - 1)\,;\, V_{BE1} = V_T ln(\frac{I_{C1}}{I_s}) \tag{1}$$

$$I_{C2} = I_{s2}(e^{V_{BE2}/V_T} - 1) \tag{2}$$

Because of scaling A_E, current constants I_s are different.

$$I_{s2} = n\, I_{s1} \tag{3}$$

Saturation current is defined as:

$$I_{sn} = qn_i^2 A_E \frac{D_{n,B}}{N_B w'_B} \tag{4}$$

Divide current equations 1 and 2:

$$n\frac{I_{D1}}{I_{D2}} = e^{(V_{BE1}-V_{BE2})/V_T} \tag{5}$$

$$V_{BE2} - V_{BE1} = \frac{kT}{q} ln(\frac{nI_{D1}}{I_{D2}}) \tag{6}$$

This difference is applied to resistor R_3.

$$\frac{\Delta V_{BE}}{R_3} = \frac{V_{BGR} - V_{BE1}}{R_2} = \frac{1}{R_3}\frac{kT}{q} ln(\frac{nI_{D1}}{I_{D2}}) \tag{7}$$

$$V_{BGR} = V_{BE1} + \Delta V_{BE}\frac{R_2}{R_3} \tag{8}$$

If we approximate that $I_{D1} \approx I_{D2}$:

$$V_{BGR} = V_{BE1} + \frac{kT}{q} ln(n)\frac{R_2}{R_3} \tag{9}$$

Mathematical equation for I_{C1}.

$$V_{BGR} - V_{BE1} = R_1 I_{C1} \tag{10}$$

1.2 Brokaw bandgap reference

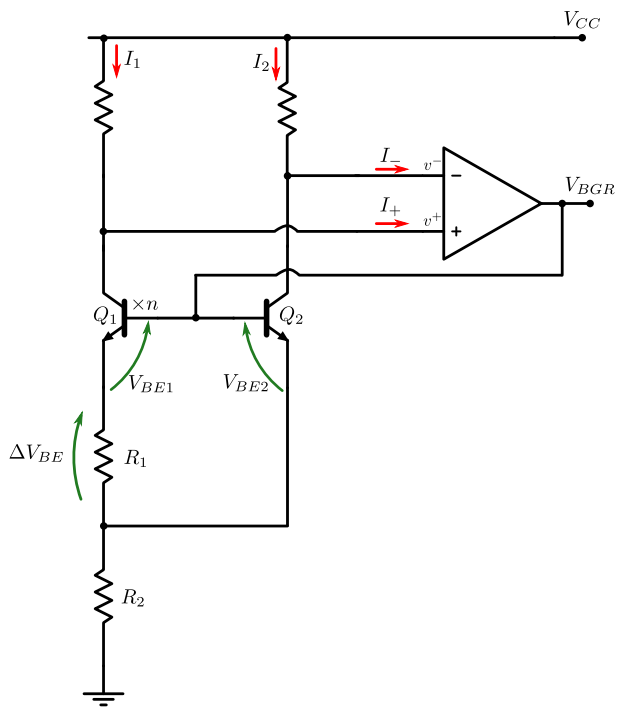

Figure 2: Brokow Bandgap Reference Voltage

Current inputs to OTA expected because of potential NPN I_b.

1.3 Tsividis bandgap reference

2 Errors PTAT or non-PTAT

- input DC opAmp offset, is very important paper used chopping to lower this dc offset.
- V_{BE} diode connected

3 PTAT Bias

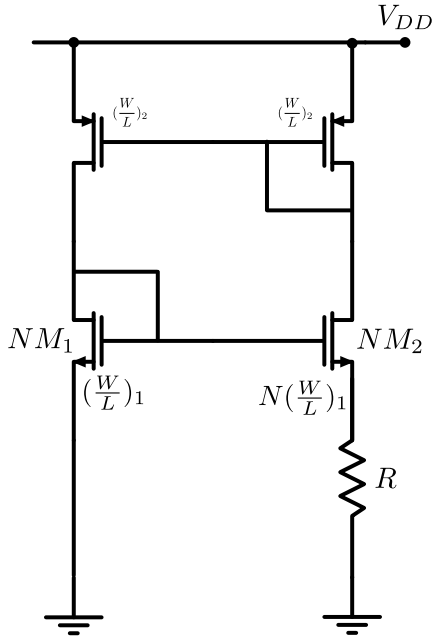

Figure 3: PTAT Bias

Only large signal analysis:

$$V_{gs1} = V_{gs2} + R\,I_{D1} \tag{11}$$

$$I_{D1} = \mu_n C_{ox} \frac{W}{L} (V_{GS} - V_{th})^2 \tag{12}$$

Invert the function to $I_D = f(V_{GS})$:

$$V_{GS} = V_{th} + \sqrt{\frac{I_{D1}}{\mu_n C_{ox} \frac{W}{L}}} \tag{13}$$

PMOS mirror forces $I_{D1} = I_{D2}$:

$$V_{GS1} = V_{th} + \sqrt{\frac{I_{D1}}{\mu_n C_{ox} \frac{W}{L}}}, \tag{14}$$

$$V_{GS2} = V_{th} + \sqrt{\frac{I_{D2}}{\mu_n C_{ox} N \frac{W}{L}}} \tag{15}$$

Subtracting the 2 gate-source voltages:

$$R\,I_{D1} = V_{GS1} - V_{GS2} = (1 - \frac{1}{\sqrt{N}}) \sqrt{\frac{I_{D1}}{\mu_n C_{ox} \frac{W}{L}}} \tag{16}$$

If we square both sides:

$$I_{D1} = V_{GS1} - V_{GS2} = (1 - \frac{1}{\sqrt{N}})^2 \frac{1}{R^2} \frac{1}{\mu_n C_{ox} \frac{W}{L}} \tag{17}$$

$$I_{PTAT} = (1 - \frac{1}{\sqrt{N}})^2 \frac{1}{R^2} \frac{1}{\mu_n C_{ox} (\frac{W}{L})_1} \tag{18}$$

3.1 Start-up circuit

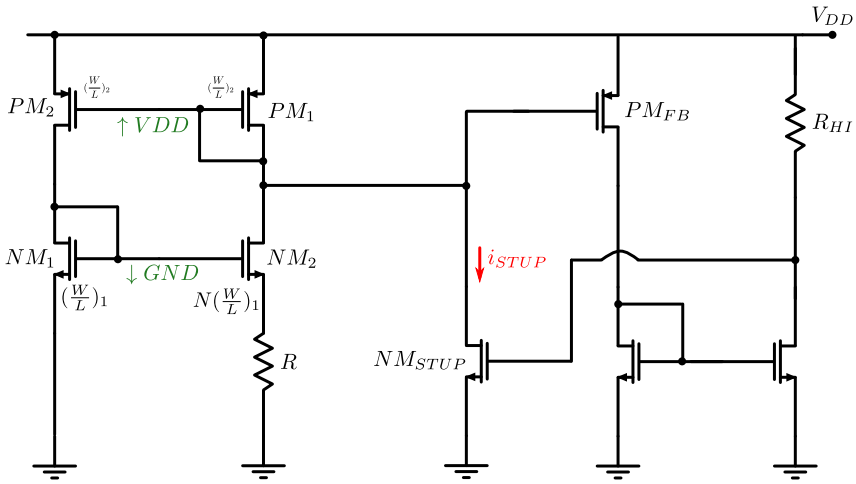

Figure 4: PTAT Bias Start-up Circuit TODO

In Fig. 4, Start-up circuit can be seen. Start-up circuit is needed to avoid the zero-current state in the PTAT Bias Circuit. When gates of PMOS mirror are close to V_{DD}, and NMOS Mirror gates are close to GND. With included start-up circuit PM_{FB} is also zero current, which means ther mirror is off and current through R_{HI} is 0. So on start-up NM_{STUP} is on and droping the voltage on gates of PMOS current. Turning it on will turn on the PM_FB, which by feedback turns on the NMOS mirror inside of start-up circuit, starting the current through R_{HI}. If that resistance is high enough voltage will drop and NM_{STUP} is turned off, isolating the start-up circuit is disconnected from the PTAT bias.

4 Bandgap Reference Design

Green nodes in Fig. 5 represent nodes that are part of analog test, without it there is 6 dB gain for this frequency range from supply to output reference. Red currents are currents of interest, and I_{B+} is not zero because of in NPN differential pair.

4.1 Passive Low-Pass Filter

Purpose is Power Supply Rejection (PSR^+) at frequencies higher than 100 kHz.

5 Operational Transconductance Amplfiers Design

Need to check saturation region, also subthreshold region or not.

5.1 Comparator OTA

Input differential pair is PMOS.

5.2 Buffer OTA

Expected input is 1.306 V. Transistor used for input differential pairs is npn BJT.

5.3 Testing stability

Identified three loops: feedback loop for comparator, buffer loop, and start-up circuit. Loop inside of start-up circuit has no gain so it is stable. For the other two Phase Margin and Gain Margin needs to be simulated.

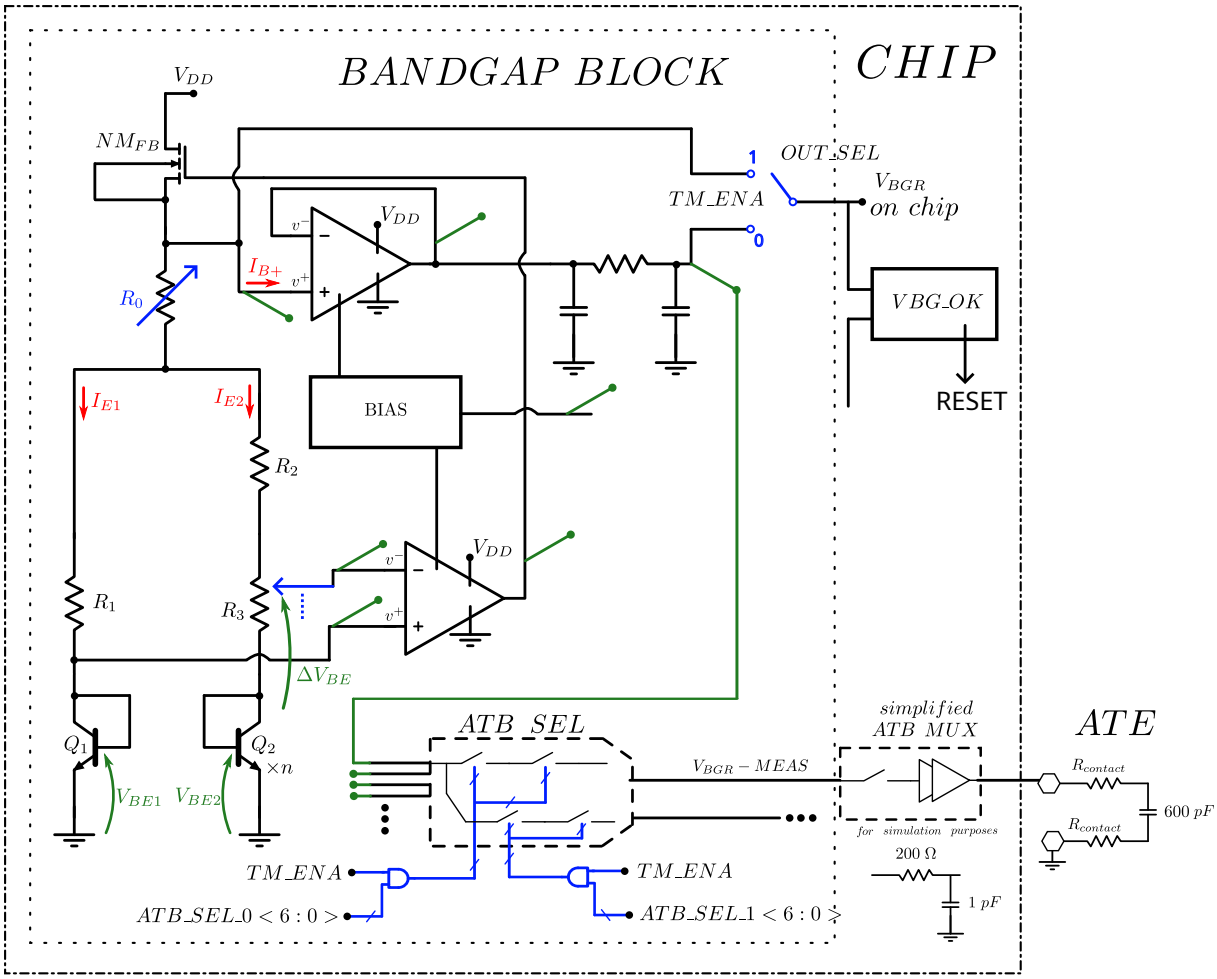

Figure 5: Bandgap Reference Voltage

6 Parameter Definitions

6.1 Inaccuracy Absolute Error

6.2 Temperature Coefficient

Is defined by box method.

7 Design for Testability

- Analog Test Bus
- Analog Stress Test
- IDDQ Quiescent Current