High Precision Bandgap Reference Voltage

Aleksandar Vuković

Abstract

Includes specifications for the block. Different topologies for Bandgap and Opeational Transconductace Amplifier.

Keywords: high precision, trimming, Kuijk, Brokaw, Tsividis, bandgap, voltage reference, OTA

1 Topoplogy classification

There are three basic types of Bandgap Voltage References based on

- Kuijk Bandgap
- Brokaw Bandgap
- Tsividis Bandgap

1.1 Kuijk Bandgap

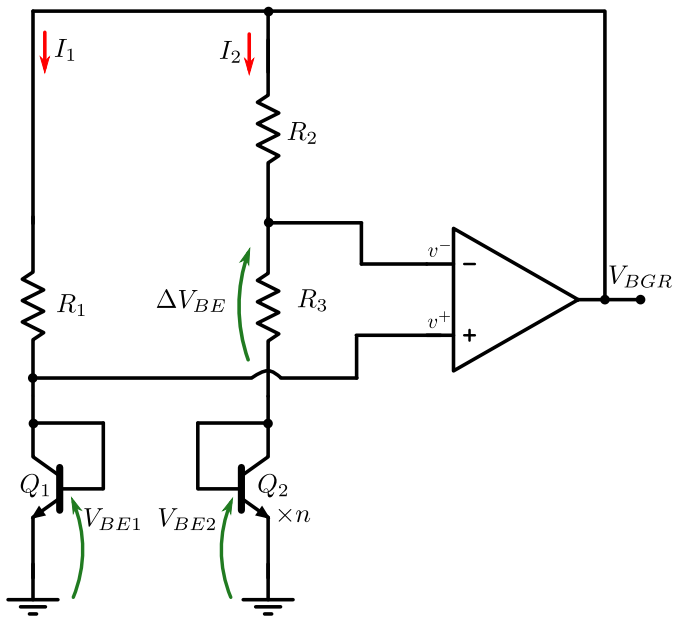

Figure 1: Kuijk Bandgap Reference Voltage

This design is based on Kuijk paper from 1972.

$$I_{C1} = I_{s1}(e^{V_{BE1}/V_T} - 1)\,;\, V_{BE1} = V_T ln(\frac{I_{C1}}{I_s}) \tag{1}$$

$$I_{C2} = I_{s2}(e^{V_{BE2}/V_T} - 1) \tag{2}$$

Because of scaling A_E

$$I_{s2} = n\, I_{s1} \tag{3}$$

Saturation current is defined as:

$$I_{sn} = q n_i^2 A_E \frac{D_{n,B}}{N_B w'_B} \tag{4}$$

Divide current equations 1 and 2:

$$n\frac{I_{D1}}{I_{D2}} = e^{(V_{BE1}-V_{BE2})/V_T} \tag{5}$$

$$V_{BE2} - V_{BE1} = \frac{kT}{q} ln(\frac{nI_{D1}}{I_{D2}}) \tag{6}$$

This difference is applied on resistor R_3.

$$\frac{\Delta V_{BE}}{R_3} = \frac{V_{BGR} - V_{BE1}}{R_2} = \frac{1}{R_3}\frac{kT}{q} ln(\frac{nI_{D1}}{I_{D2}}) \tag{7}$$

$$V_{BGR} = V_{BE1} + \Delta V_{BE}\frac{R_2}{R_3} \tag{8}$$

If we approximate that $I_{D1} \approx I_{D2}$:

$$V_{BGR} = V_{BE1} + \frac{kT}{q} ln(n)\frac{R_2}{R_3} \tag{9}$$

Mathematical equation for I_{C1}.

$$V_{BGR} - V_{BE1} = R_1 I_{C1} \tag{10}$$

1.2 Brokaw bandgap reference

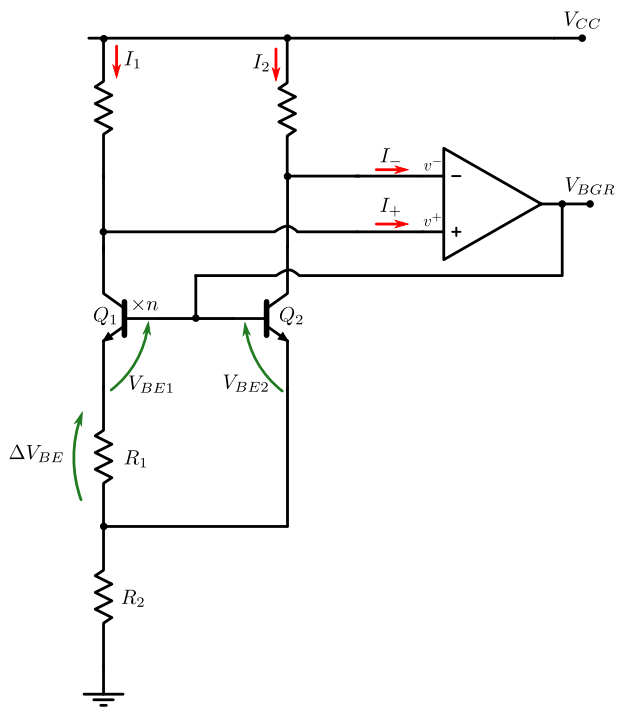

Figure 2: Brokow Bandgap Reference Voltage

Current inputs to OTA expected because of potential NPN I_b.

1.3 Tsividis bandgap reference

2 Errors PTAT or non-PTAT

- input DC opAmp offset, is very important paper used chopping to lower this dc offset.
- V_{BE} diode connected

3 PTAT Bias

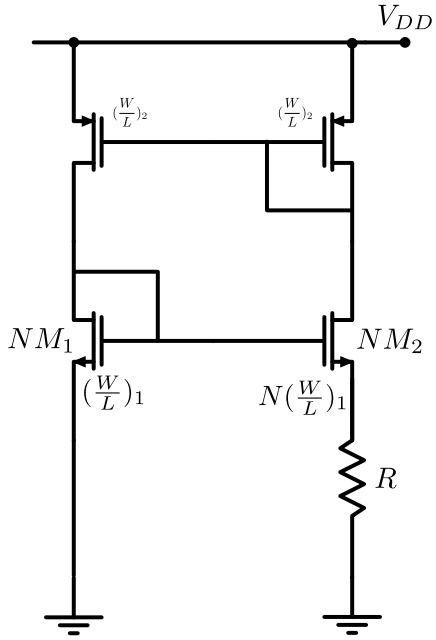

Figure 3: PTAT Bias

Only large signal analysis:

$$V_{gs1} = V_{gs2} + R\,I_{D1} \tag{11}$$

$$I_{D1} = \mu_n C_{ox} \frac{W}{L} (V_{GS} - V_{th})^2 \tag{12}$$

Invert the function to $I_D = f(V_{GS})$:

$$V_{GS} = V_{th} + \sqrt{\frac{I_{D1}}{\mu_n C_{ox} \frac{W}{L}}} \tag{13}$$

PMOS mirror forces $I_{D1} = I_{D2}$:

$$V_{GS1} = V_{th} + \sqrt{\frac{I_{D1}}{\mu_n C_{ox} \frac{W}{L}}}, \tag{14}$$

$$V_{GS2} = V_{th} + \sqrt{\frac{I_{D2}}{\mu_n C_{ox} N \frac{W}{L}}} \tag{15}$$

Subtracting the 2 gate-source voltages:

$$R\,I_{D1} = V_{GS1} - V_{GS2} = (1 - \frac{1}{\sqrt{N}}) \sqrt{\frac{I_{D1}}{\mu_n C_{ox} \frac{W}{L}}} \tag{16}$$

If we square both sides:

$$I_{D1} = V_{GS1} - V_{GS2} = (1 - \frac{1}{\sqrt{N}})^2 \frac{1}{R^2} \frac{1}{\mu_n C_{ox} \frac{W}{L}} \tag{17}$$

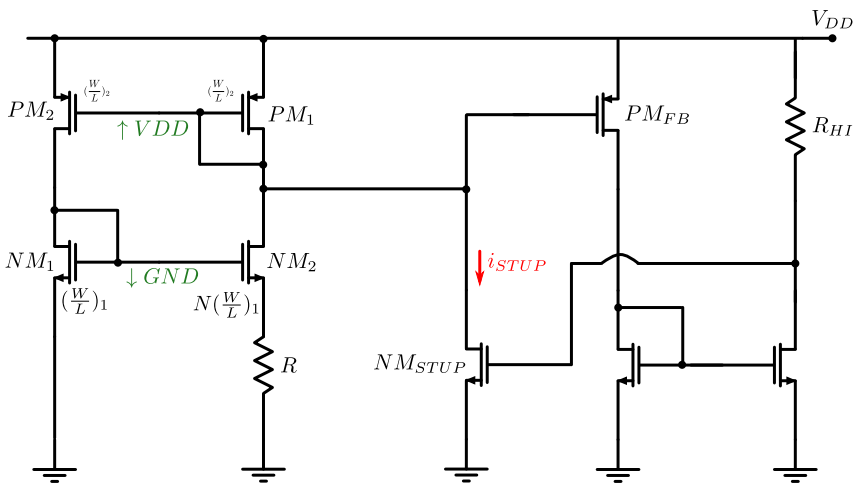

Figure 4: PTAT Bias Start-up Circuit TODO

3.1 Start-up circuit

4 Bandgap Reference Design

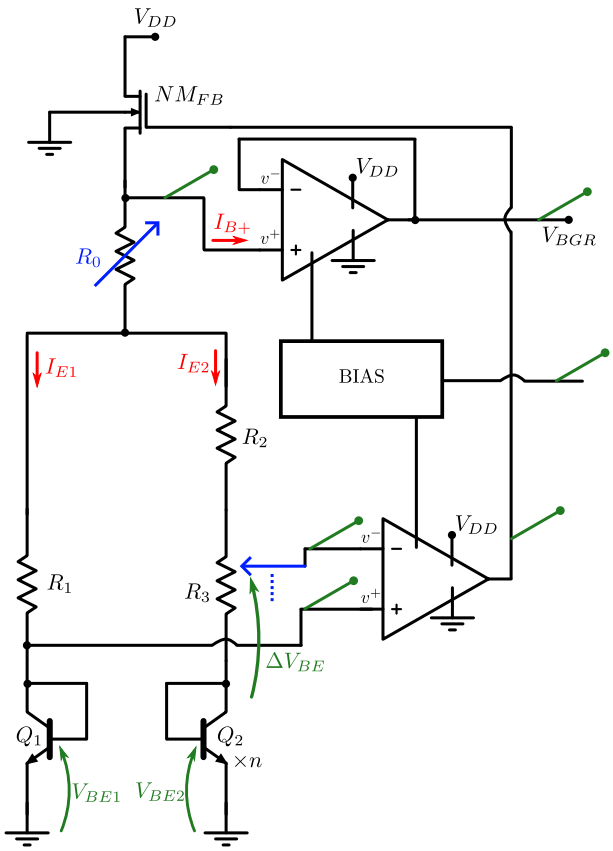

Figure 5: Bandgap Reference Voltage

5 Operational Transconductance Amplfiers Design

Need to check saturation region, also subthreshold region or not.

5.1 Comparator OTA

Input differential pair is PMOS.

5.2 Buffer OTA

Expected input is around 1.3 V. Transistor used for input differential pairs is npn BJT.

5.3 Testing stability

Identified three loops: feedback loop for comparator, buffer loop, and start-up circuit.