High Precision Bandgap Reference Voltage

Aleksandar Vuković

Abstract

Includes specifications for the block. Different topologies for Bandgap and Opeational Transconductace Amplifier.

Keywords: high precision, trimming, Kuijk, Brokaw, Tsividis, bandgap, voltage reference, OTA

1 Topoplogy classification

There are three basic types of Bandgap Voltage References based on

- Kuijk Bandgap
- Brokaw Bandgap
- Tsividis Bandgap

1.1 Kuijk Bandgap

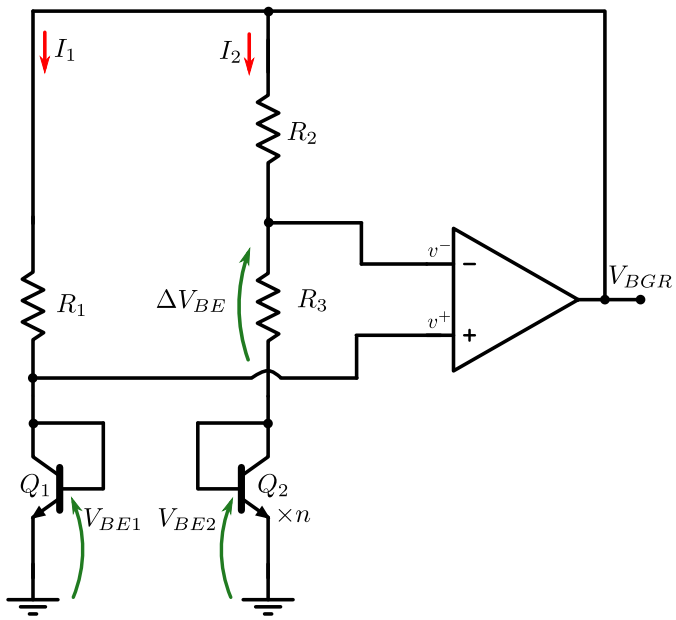

Figure 1: Kuijk Bandgap Reference Voltage

This design is based on Kuijk paper from 1972.

$$I_{C1} = I_{s1}(e^{V_{BE1}/V_T} - 1)\,;\, V_{BE1} = V_T ln(\frac{I_{C1}}{I_s}) \tag{1}$$

$$I_{C2} = I_{s2}(e^{V_{BE2}/V_T} - 1) \tag{2}$$

Because of scaling A_E

$$I_{s2} = n\, I_{s1} \tag{3}$$

Saturation current is defined as:

$$I_{sn} = q n_i^2 A_E \frac{D_{n,B}}{N_B w'_B} \tag{4}$$

Divide current equations 1 and 2:

$$n\frac{I_{D1}}{I_{D2}} = e^{(V_{BE1}-V_{BE2})/V_T} \tag{5}$$

$$V_{BE2} - V_{BE1} = \frac{kT}{q} ln(\frac{nI_{D1}}{I_{D2}}) \tag{6}$$

This difference is applied on resistor R_3.

$$\frac{\Delta V_{BE}}{R_3} = \frac{V_{BGR} - V_{BE1}}{R_2} = \frac{1}{R_3}\frac{kT}{q} ln(\frac{nI_{D1}}{I_{D2}}) \tag{7}$$

$$V_{BGR} = V_{BE1} + \Delta V_{BE}\frac{R_2}{R_3} \tag{8}$$

If we approximate that $I_{D1} \approx I_{D2}$:

$$V_{BGR} = V_{BE1} + \frac{kT}{q} ln(n)\frac{R_2}{R_3} \tag{9}$$

Mathematical equation for I_{C1}.

$$V_{BGR} - V_{BE1} = R_1 I_{C1} \tag{10}$$

1.2 Brokaw bandgap reference

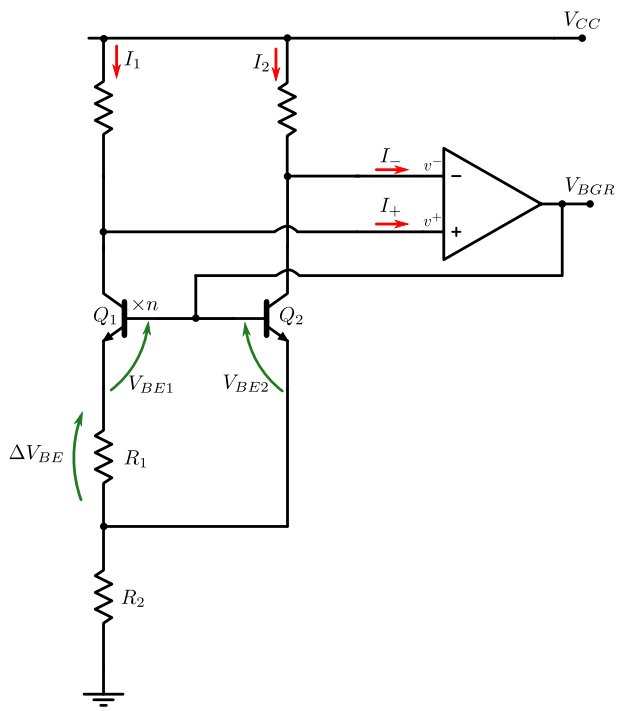

Figure 2: Brokow Bandgap Reference Voltage

Current inputs to OTA expected because of potential NPN I_b.

1.3 Tsividis bandgap reference

2 Errors PTAT or non-PTAT

- input DC opAmp offset
- V_{BE} diode connected

3 PTAT Bias

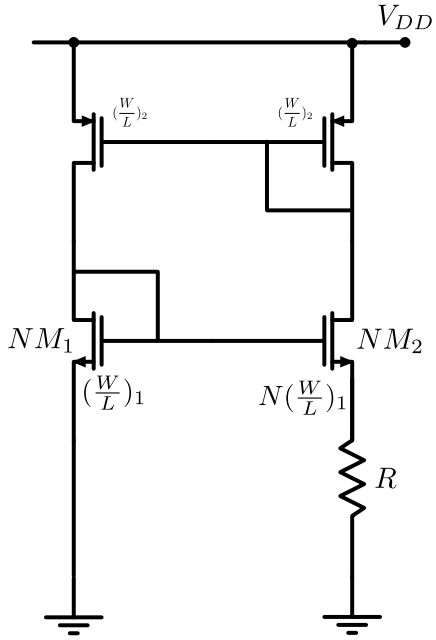

Figure 3: PTAT Bias

Only large signal analysis:

$$V_{gs1} = V_{gs2} + R\,I_{D1} \tag{11}$$

$$I_{D1} = \mu_n C_{ox} \frac{W}{L} (V_{GS} - V_{th})^2 \tag{12}$$

Invert the function to $I_D = f(V_{GS})$:

$$V_{GS} = V_{th} + \sqrt{\frac{I_{D1}}{\mu_n C_{ox} \frac{W}{L}}} \tag{13}$$

PMOS mirror forces $I_{D1} = I_{D2}$:

$$V_{GS1} = V_{th} + \sqrt{\frac{I_{D1}}{\mu_n C_{ox} \frac{W}{L}}}, \tag{14}$$

$$V_{GS2} = V_{th} + \sqrt{\frac{I_{D2}}{\mu_n C_{ox} N \frac{W}{L}}} \tag{15}$$

Subtracting the 2 gate-source voltages:

$$R\,I_{D1} = V_{GS1} - V_{GS2} = (1 - \frac{1}{\sqrt{N}}) \sqrt{\frac{I_{D1}}{\mu_n C_{ox} \frac{W}{L}}} \tag{16}$$

If we square both sides:

$$I_{D1} = V_{GS1} - V_{GS2} = (1 - \frac{1}{\sqrt{N}})^2 \frac{1}{R^2} \frac{1}{\mu_n C_{ox} \frac{W}{L}} \tag{17}$$

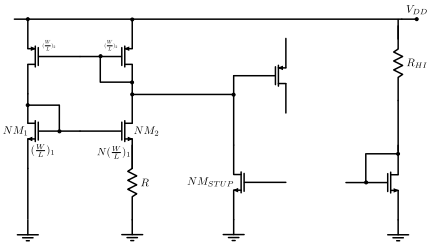

Figure 4: PTAT Bias Start-up Circuit TODO

3.1 Start-up circuit

4 Bandgap Reference Design

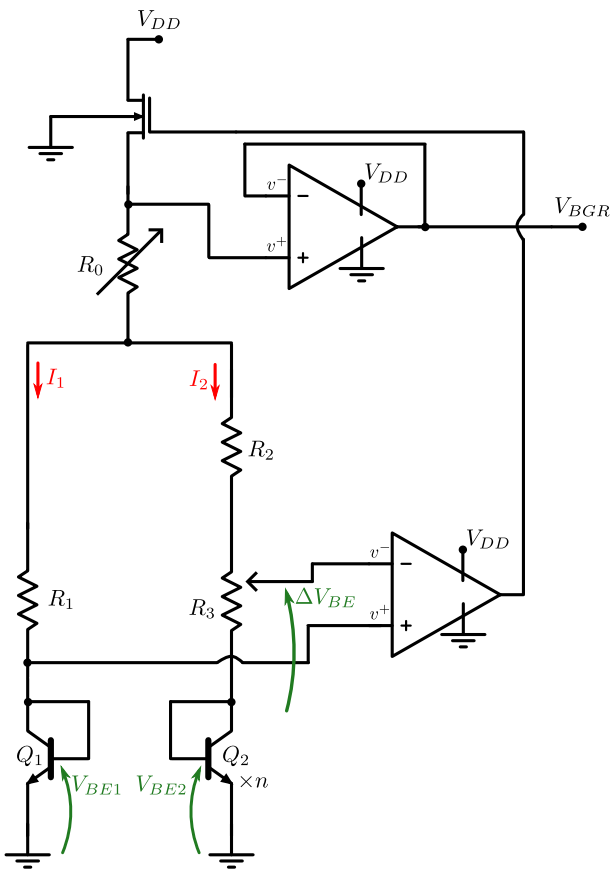

Figure 5: Bandgap Reference Voltage

5 Operational Transconductance Amplfiers Design

5.1 Comparator OTA

5.2 Buffer OTA

Expected input is around 1.3 V. Transistor used for input differential pairs is npn BJT.