Exercise 5
Hall effect

Aim

To determine the sample conductivity, Hall coefficient, mobility and concentration of carriers in semiconductors using the Hall effect.

Required theoretical knowledge

The idea of Hall effect. Hall constant. Lorentz force. Units of magnetic field. Hall constant, the principle of operation of the electromagnet, the relationship between current density and the conductivity and carrier mobility, the method of measuring the DC carrier mobility. Application of Hall sensors.

Equipment

Electromagnet with a Hall probe mounted inside and dedicated power supply (R2D2). Measurement box containing current source, two multimeters, PC.

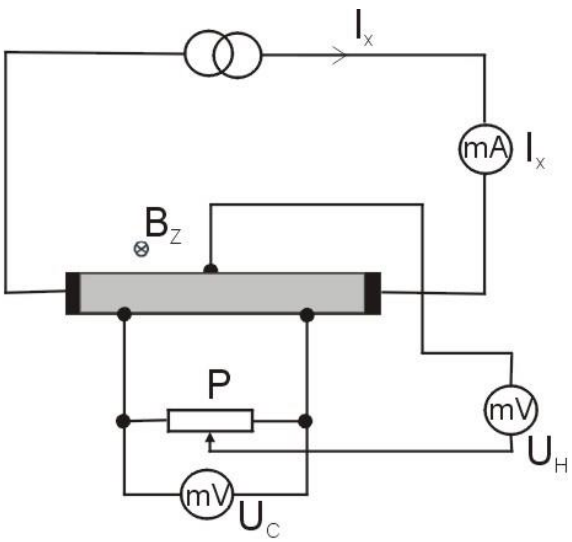

Fig. 1. Hall measurements setup.

Problems for discussion:

What is the Hall Effect?
The material constants dependence of Hall voltage? Why Hall devices are typically made of semiconductor?
What are the practical applications of Hall devices?

Measurement plan:

1. Set the current to I_x = 10 mA on the measuring unit, using the knob (Ix is the current flowing through the sample, regulated in the range from -20 to 20 mA, the switch is used to change the polarity of the current).
2. Connect the V_H and V_C meters according to the scheme of Fig. 1.
3. Turn on your computer, open the program Open Office *Calc*.
4. With the electromagnet switched off, reset voltage V_H using potentiometer P.
5. Turn on the electromagnet - R2D2 - (electromagnet power transformer knob must be set to zero!).

6. Using a rotary knob, set the value of the current flowing through the electromagnet (in the range of from 1 to 3 A) given by teaching assistant. Read the magnetic field value for given current from Fig. 3 in the manual.
7. Measure the voltages V_C and V_H, as a function of current Ix in the range -20 mA <Ix <20 mA with a step given by the teaching assistant. The measured values enter in *Calc* in columns: I_x, V_C, V_H.
8. Once the measurement is finished, set the current of the electromagnet to zero and then turn it off.

Problems for discussion:

Operation principals of the electromagnet. Which physical law is used to produce a magnetic field?
What is a potentiometer? What is the role of potentiometer P in the exercise?
From the formula for the Lorentz force determine the direction in which charge carriers are deflected in Figure 1, if they are 1) holes, 2) electrons?
What is V_C voltage?

Data processing:

1. Use *Calc* to plot the dependence $V_H = f(V_c)$; $V_H = f(I_X)$ and $I_X = f(V_c)$ on three separate graphs (if more than one value of magnetic field was used, draw these curves on a single graph).
2. Using one-parameter linear regression method determine the slope and its uncertainty of these dependence.
3. Calculate the carrier mobility μ, Hall constant R_H and conductivity σ based on the relations given below and coefficients determined in point 2. Determine the values and their uncertainties in SI units.

$$U_H = \mu \frac{B_Z \cdot b}{l} U_C$$

$$U_H = R_H \frac{B_Z}{h} I_x$$

$$I_x = \sigma \frac{b \cdot h}{l} U_c$$

where μ is the carrier mobility, B_z is the magnetic field, *b*, *l*, *h* are the geometrical dimensions of the probe, R_H is the Hall constant, σ is the sample conductivity). Fig. 2 shows the geometrical dimensions of the probe.

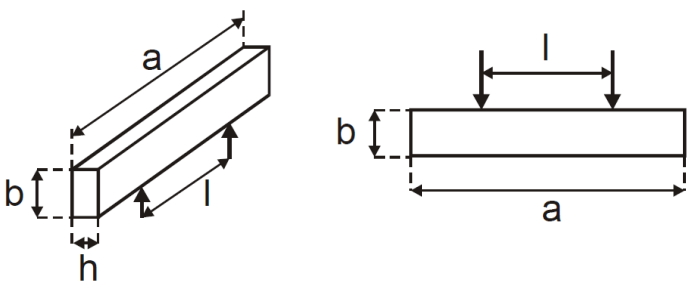

Fig. 2. Geometrical dimensions of the Hall probe

b = (3,7 ± 0,1) × 10^{-3} m,

h = (1,7 ± 0,1) × 10^{-3} m,

$l = (11{,}5 \pm 0{,}2) \times 10^{-3}$ m,

$a = (22{,}4 \pm 0{,}2) \times 10^{-3}$ m.

4. Find the concentration of carriers n on the basis of the relationship $R_H = \frac{1}{ne}$.
5. Calculate the uncertainties $\Delta\mu$, ΔR_H, $\Delta\sigma$, Δn.

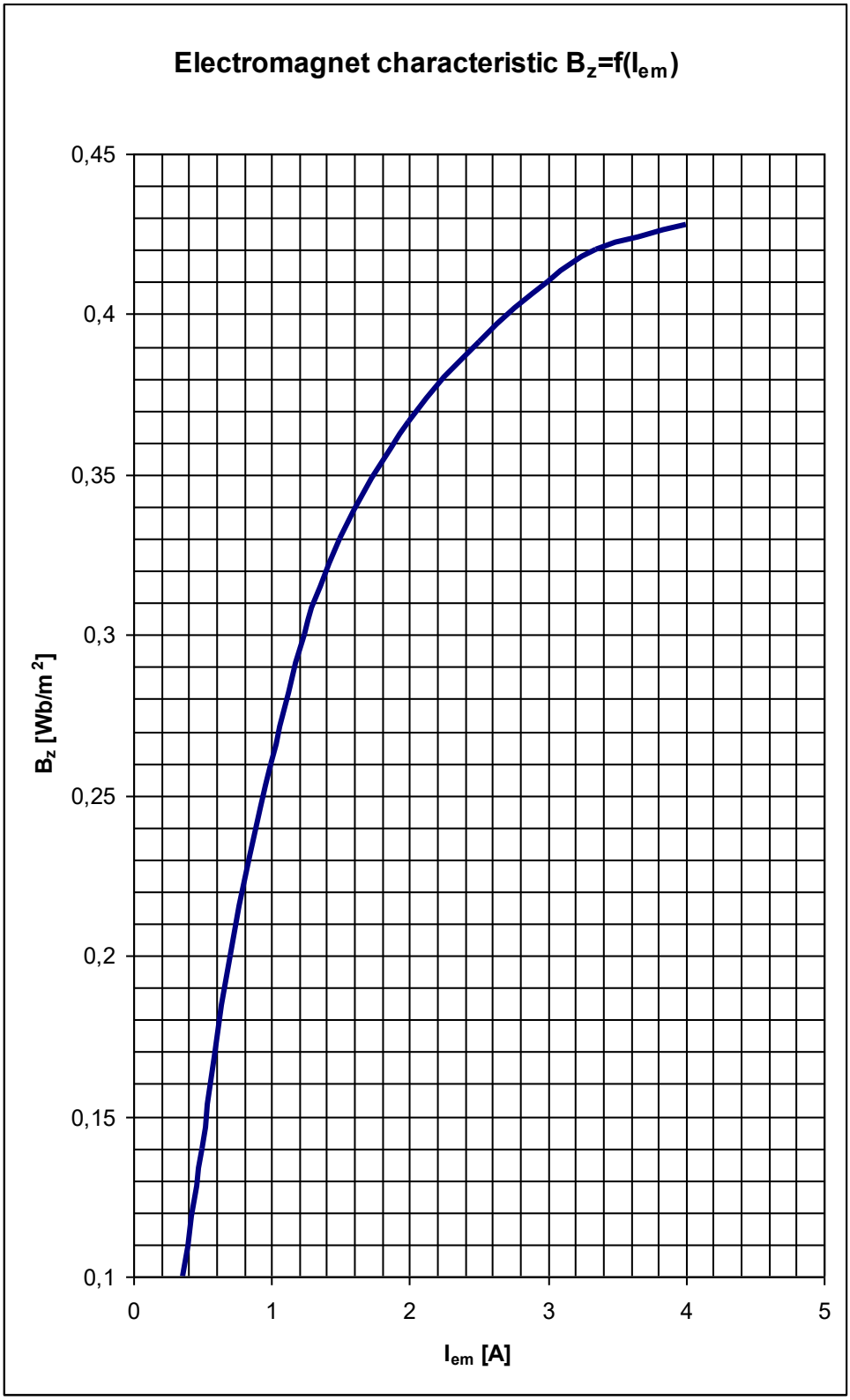

Fig. 3. Electromagnet characteristic

Literature

1. Halliday, Resnick "Fundamentals of Physics - 8th edition", John Wiley 2007,