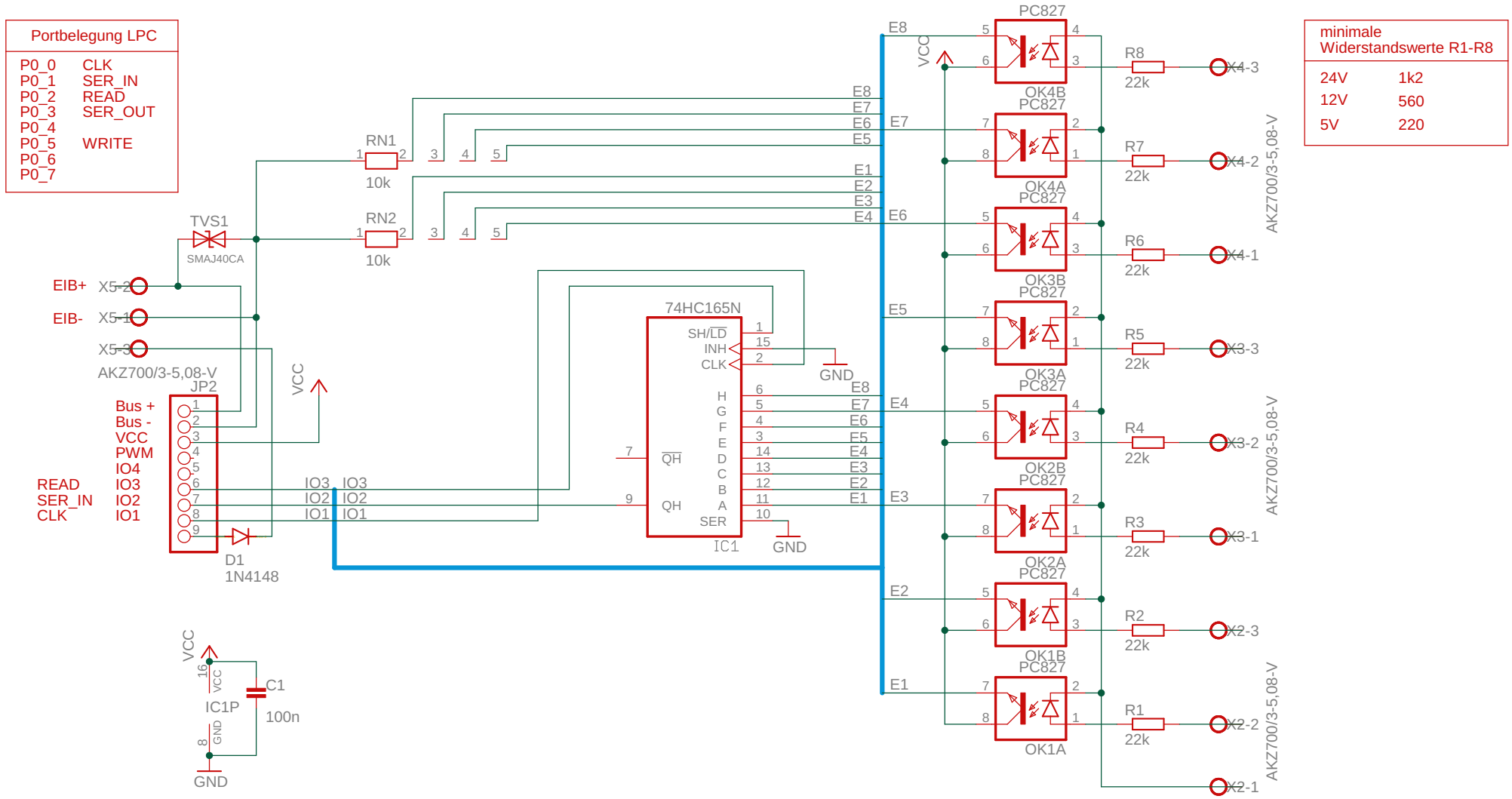

Freebus 8in 2te 24VDC in Board

TITLE: 2te8x24V_DC_In_4_v03

Document Number:

REV:

Date: 20.05.2025 17:48

Sheet: 1/1