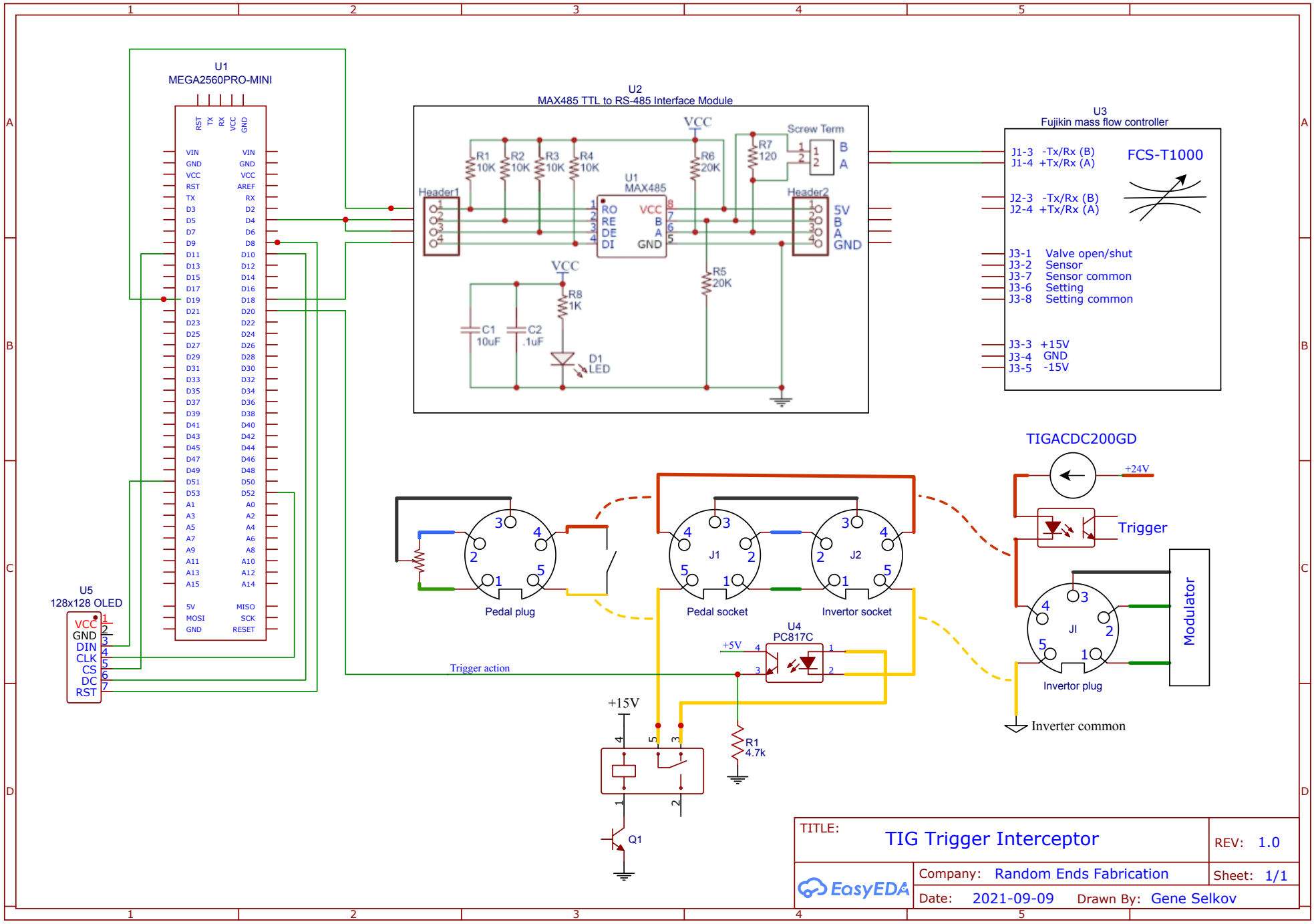
U1
MEGA2560PRO-MINI
U2
MAX485 TTL to RS-485 Interface Module
U3
Fujikin mass flow controller
FCS-T1000
J1-3 -Tx/Rx (B)
J1-4 +Tx/Rx (A)
J2-3 -Tx/Rx (B)
J2-4 +Tx/Rx (A)
J3-1 Valve open/shut
J3-2 Sensor
J3-7 Sensor common
J3-6 Setting
J3-8 Setting common
J3-3 +15V
J3-4 GND
J3-5 -15V
Header1
Header2
Screw Term
U1
MAX485
R1 10K
R2 10K
R3 10K
R4 10K
R5 20K
R6 20K
R7 120
R8 1K
C1 10uF
C2 .1uF
D1 LED
VCC
U5
128x128 OLED
TIGACDC200GD
+24V
Trigger
Modulator
Pedal plug
Pedal socket
Invertor socket
Invertor plug
Inverter common
U4
PC817C
Trigger action
+15V
R1 4.7k
Q1
TITLE:
TIG Trigger Interceptor
REV: 1.0
Company: Random Ends Fabrication
Sheet: 1/1
Date: 2021-09-09
Drawn By: Gene Selkov
EasyEDA