SARANATHAN COLLEGE OF ENGINEERING

(AUTONOMOUS INSTITUTION)

(Affiliated to Anna University, Chennai & Accredited by NAAC A+ Grade)

Venkateswara Nagar, Panjappur, Tiruchirappalli- 620 012.

EE3035 – GRID INTEGRATING TECHNIQUES AND CHALLENGES

VI SEMESTER – THIRD YEAR

(REGULATION 2024 - AUTONOMOUS)

ANNA UNIVERSITY:: CHENNAI-25

2025-2026

Name : _____

Batch No : _____

Register No : _____

VISION OF THE INSTITUTION

Impart an inclusive engineering education that beyond being a facilitator for a career and rudimentary skills, equips the students to offer ethically & environmentally conscious solutions to societal issues.

MISSION OF THE INSTITUTION

Develop the Institution into a Model Self Financing College of Engineering and Technology. Deliver Professional Training to our students with state-of-the art Laboratories and convert them into Technocrats of international repute.

1. Create a nurturing, holistic environment of engineering education to facilitate every student realize their full potential.
2. Strive to make the students strong in basic concepts armed with appropriate skills to enhance one's ability to apply the knowledge and provide solutions to real time issues.
3. Maintain an ambience that facilitates the students to strengthen their ethical value systems.
4. Actively promote R&D and institute-industry interaction.

DEPARTMENT OF EEE

VISION OF THE DEPARTMENT

- Will strive continuously in pursuit of creativity, innovations and ethics in the field of Electrical and Electronics Engineering to blossom into Centre of Excellence.

MISSION OF THE DEPARTMENT

1. To impart total quality education through broader exposure, value additions and effective teaching learning process.
2. To mould students to meet professional challenges and to become outstanding Engineers and Technocrats.
3. To pursue research in the field of Electrical and Electronics Engineering to serve the needs of the industry, scientific community and society.

PROGRAMME EDUCATIONAL OBJECTIVES

The Graduates of Electrical and Electronics Engineering will

PEO1 : Impart strong foundation in electrical engineering concepts and encourage application of academic learning to solve real time engineering problems.

PEO2 : Inculcate professional ethics & effective communication skills and create an ability to address societal issues by leveraging one's engineering knowledge.

PEO3 : Develop technical skills through hands on experience and provide exposure to industrial practices.

PEO4 : Provide an academic environment to cultivate multidisciplinary approach, encourage continuous learning for effective leadership to flourish.

PROGRAM OUTCOMES (POs)

Graduates of Electrical and Electronics Engineering will be able to:

PO1 : Engineering Knowledge: Apply the knowledge of mathematics, science, engineering fundamentals, and an engineering specialization to the solution of complex engineering problems.

PO2 : Problem Analysis: Identify, formulate, review research literature, and analyze complex engineering problems reaching substantiated conclusions using first principles of mathematics, natural sciences, and engineering sciences.

PO3 : Design/Development of Solutions: Design solutions for complex engineering problems and design system components or processes that meet the specified needs with appropriate consideration for the public health and safety, and the cultural, societal, and environmental considerations.

PO4 : Conduct Investigations of Complex Problems: Use research-based knowledge and research methods including design of experiments, analysis and interpretation of data, and synthesis of the information to provide valid conclusions.

PO5 : Modern Tool Usage: Create, select, and apply appropriate techniques, resources, and modern engineering and IT tools including prediction and modeling to complex engineering activities with an understanding of the limitations.

PO6 : The Engineer and Society: Apply reasoning informed by the contextual knowledge to assess societal, health, safety, legal and cultural issues and the consequent responsibilities relevant to the professional engineering practice.

PO7 : Environment and Sustainability: Understand the impact of the professional engineering solutions in societal and environmental contexts, and demonstrate the knowledge of, and need for sustainable development.

PO8 : Ethics: Apply ethical principles and commit to professional ethics and responsibilities and norms of the engineering practice.

PO9 : Individual and Team Work: Function effectively as an individual, and as a member or leader in diverse teams, and in multidisciplinary settings.

PO10 : Communication: Communicate effectively on complex engineering activities with the engineering community and with society at large, such as, being able to comprehend and write effective reports and design documentation, make effective presentations, and give and receive clear instructions.

PO11 : Project Management and Finance: Demonstrate knowledge and understanding of the engineering and management principles and apply these to one's own work, as a member and leader in a team, to manage projects and in multidisciplinary environments.

PO12 : Life-long Learning: Recognize the need for, and have the preparation and ability to engage in independent and life-long learning in the broadest context of technological change.

SARANATHAN COLLEGE OF ENGINEERING

(An Autonomous Institution)

(Affiliated to Anna University, Chennai & Accredited by NAAC A+ Grade)

Venkateswara Nagar, Panjappur, Tiruchirappalli- 620 012.

BONAFIDE CERTIFICATE

Certified that this is the bonafide record of the work done by

_____ Reg. No: _____

of 6th Semester Third Year B.E. Electrical and Electronics Engineering Department in **Grid Integrating Techniques and Challenges (EE3035)** during the academic year 2025-2026.

Head of the Department Staff - in - Charge

Date:

Submitted for the Practical Examination held at **SARANATHAN COLLEGE OF ENGINEERING, TIRUCHIRAPPALLI** on _____

INTERNAL EXAMINER EXTERNAL EXAMINER

EE3035 – GRID INTEGRATING TECHNIQUES AND CHALLENGES

LIST OF EXPERIMENTS

1. Develop a model for the control of DC micro grid for non-linear loads
2. Simulation study of three phase inverters with fixed and sine PWM techniques
3. Simulation and Design of buck/boost converters.
4. Simulate a Grid Connected Wind Energy System with STATCOM and investigate the improvement in power quality.

TABLE OF CONTENTS

S.No.	Date	Name of Experiment	Page No.	Marks	Signature
1		Design and simulation of boost converter			
2		Design and simulation of buck converter			
3		Design and simulation of buck-boost converter			
4		Simulation study of three phase inverters with fixed and sine PWM techniques			
5		Modeling and control of DC microgrid			
6		Simulation of a Grid Connected Wind Energy System with STATCOM and investigation of power quality improvement			

Exp. No. 1 Date: ___/ ___/ ___

DESIGN AND SIMULATION OF BOOST CONVERTER

Aim:

To design and simulate a boost converter with appropriate value of parameters and simulate it.

Theory and Calculations:

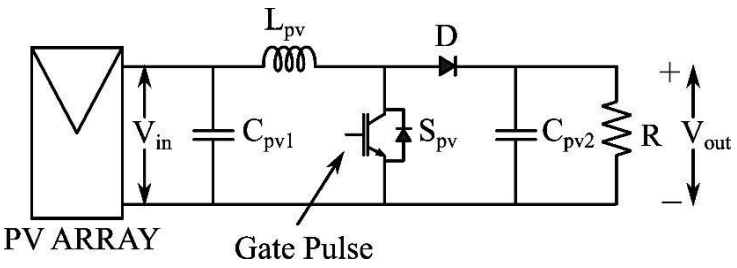

Figure 1. Circuit diagram of boost converter

The operational principle of the boost converter is as follows: As illustrated in the circuit configuration of the boost circuit in Figure 1, when the switch S_{pv} (MOSFET) is ON, the diode is OFF and the input current increases and flows through the inductor (L_{pv}) and the switch (S_{pv}). When the switch is OFF, the diode (D) is ON and the energy stored in the inductor flow through the diode, the capacitor and the load. When the inductor current falls to zero, the switch is ON and the process is repeated. The capacitor (C_{pv}) in the output circuit is large enough to provide the output dc current to the load when the diode D is OFF and limit the output voltage ripple. the relationship between the out and input voltage is expressed as,

$$\frac{V_{out}}{V_{in}} = \frac{1}{1-D}$$

where, Vout - Output voltage

Vin - Input voltage

D - Duty cycle

The circuit inductance can be calculated by,

$$L = \frac{V_{in}D}{\Delta I_L f_s}$$

where, f_s - Switching frequency

ΔI_L - Ripple current through the inductor

The value of capacitor can be selected based on,

$$C = \frac{I_{out}D}{\Delta V_C f_s} = \frac{V_{out}D}{\Delta V_C f_s R}$$

Design Calculation:

Result:

Exp. No. 2 Date: ___/ ___/ ___

DESIGN AND SIMULATION OF BUCK CONVERTER

Aim:

To design and simulate a buck converter with appropriate value of parameters and simulate it.

Theory and Calculations:

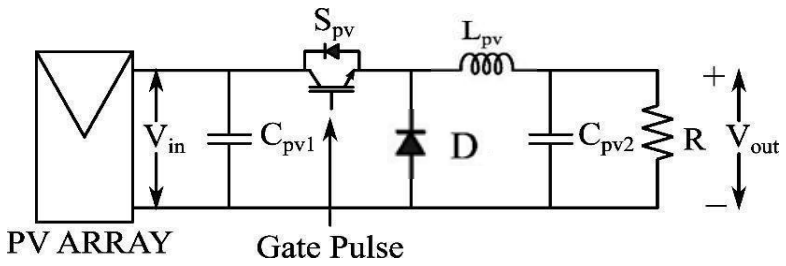

Figure 2.1 Circuit Diagram of Buck Converter

Buck converters are non-isolated switched-mode step-down DC–DC converters; the DC input voltage at the source is periodically chopped through the use of an electronic switch operating at a set frequency, and the resulting pulsated signal is filtered out and thus the load is operated at an average voltage value that is less than the input voltage. The output voltage level at the load is controlled by varying (modulating) the width of the switch chopped input pulse, which is basically controlling the duration of the time the electronic switches, MOSFETs, are ON or OFF in one cycle of the operating frequency; this is known as pulse width modulation.

Buck converters use a transistor–diode switching network; this configuration employs the transistor (S_{pv}) as the main switch and the diode D as the freewheeling path for the inductor current as shown in Figure 2.1. The ratio between the time the transistor is ON (pulse width) and one cycle is the duty cycle or duty ratio D. For a buck converter, the duty cycle or the gain is less than 1 making the output voltage below the input level.

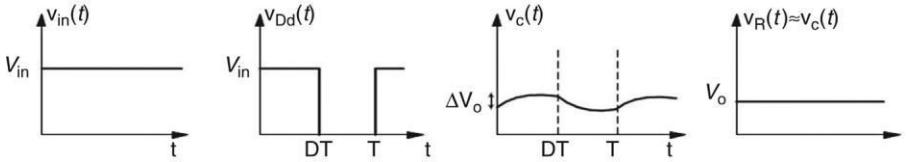

Figure 2.2. Waveforms of the buck converter

Figure 2.2 shows a breakdown of a conventional buck converter consisting of a DC input voltage, a switching network of a transistor–diode implementation, an L–C filtering bank, and a load resistor along with the voltage signal variation from the input side down to the load.

The input and output voltage relationship is given by, $V_{out}=DV_{in}$.

The output current is, $I_{out} = \frac{P_{out}}{V_{out}}$

The inductor value is given by, $L = \frac{V_{in} - V_{out}}{\Delta I_L f_s} D$

Output capacitor is obtained using, $C = \frac{\Delta IL}{8 \Delta V_{out} f_s}$

Design Calculation:

Result:

Exp. No. 3 Date: ___/ ___/ ___

DESIGN AND SIMULATION OF BUCK-BOOST CONVERTER

Aim:

To simulate a buck-boost converter for renewable energy system.

Theory and Operation of Buck-Boost Converter:

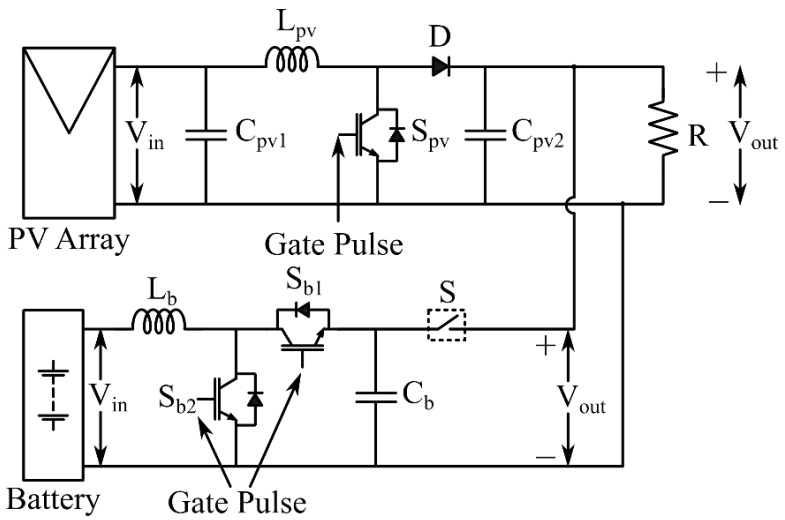

Figure 3.1. Circuit diagram of PV fed boost converter and Bidirectional buck-boost converter

In buck-boost converters, the output voltage is either higher or lower than the input voltage; but the polarity of the output voltage is reversed with respect to the input voltage. When the switch is ON, the diode is reverse biased and input provides energy to the inductor. When the switch is OFF, the energy stored in the inductor is transferred to the output. No energy is supplied by the input during this interval.

Buck-Boost Converter which can operate as a DC-DC Step-Down converter or a DC-DC Step-Up converter depending upon the duty cycle, D.

Buck-Boost Converter is shown below:

Before designing, gather the necessary specifications:

- **Input Voltage (V_{in})**: Minimum and maximum values
- **Output Voltage (V_{out})**: Desired voltage
- **Output Power (P_{out})**: Load power requirement
- **Load Resistance (R)**: If specified
- **Switching Frequency (f_s)**: Typical values range from 20 kHz to 1 MHz

- **Efficiency (η)**: Assumed around 80-90% for calculations

For an ideal buck-boost converter, the duty cycle is given by,

$$D=\frac{|V_{out}|}{|V_{out}|+V_{in}}$$

If the load power is P_{out}, the output current is given by, $I_{out}=\frac{P_{out}}{|V_{out}|}$

The inductor value is calculated by, $L=\frac{V_{in}D}{\Delta I_L f_s}$

The output capacitor is chosen to control the output voltage ripple (ΔV_{out}), $C_{out}=\frac{I_{out}D}{\Delta V_{out} f_s}$

The diode must withstand,

- Voltage rating: $V_D \geq V_{in}+|V_{out}|$
- Current rating: $I_D \geq I_{out}$

Design of Buck-Boost Converter:

Result:

Exp. No. 4 Date: ___/ ___/ ___

SIMULATION STUDY OF THREE PHASE INVERTERS WITH FIXED AND SINE PWM TECHNIQUES

Aim:

To simulate three phase inverters with fixed and sine PWM techniques.

Theory and Operation:

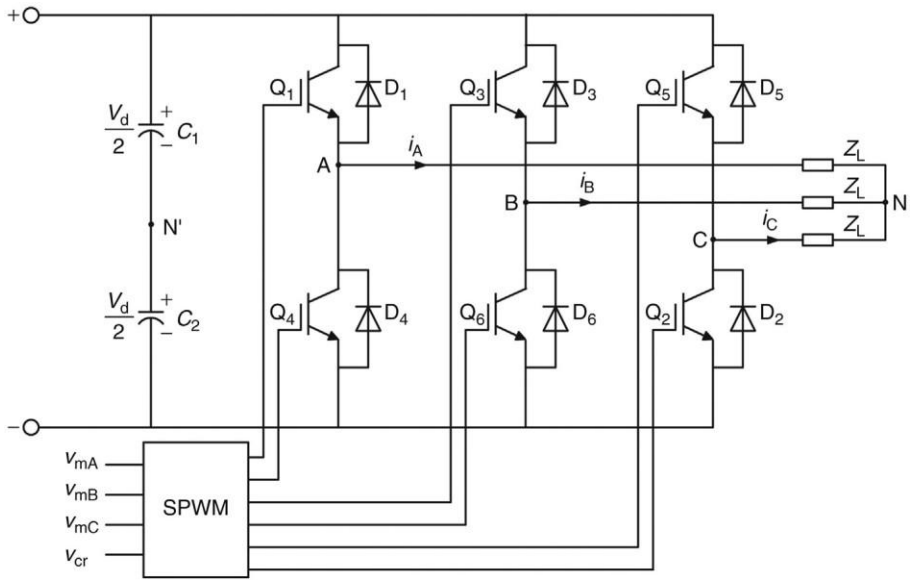

Figure 4.1. Circuit Diagram of three phase inverter

Three-phase SPWM inverters normally utilize bipolar SPWM control manners, which can be depicted by Figure 16.18. There are three sinusoidal modulation waveforms v_{mA}, v_{mB}, and v_{mC}, which displace each other by 120°. The common carrier waveform is a sawtooth or triangular signal, denoted by v_{cr}. For each leg, the trigger way is the same. Now, we take phase A to illustrate the operation principle. When $u_{mA} > v_{cr}$, Q_4 is triggered off, and Q_1 is sent a trigger-on signal. If the load current is negative, D_1 is on; otherwise, Q_1 is conducted. In both cases, one has $v_{AN'} = V_d/2$. Similarly, when $u_{mA} < v_{cr}$, Q_1 is trigged off, Q4 (or D4) is on, leading to $v_{AN'} = -(V_d/2)$. As a result, one can obtain the waveforms $v_{AN'}$, $v_{BN'}$, and $v_{CN'}$, as shown in Figure 4.2. In terms of $v_{AB} = v_{AN'} - v_{BN'}$, and $v_{AN} = v_{AN'} - (v_{AN'} + v_{BN'} + v_{CN'})/3$, one can sketch the waveform of the line voltage and phase voltage, respectively. One can see the phase voltage v_{AN} has five levels of voltage, composed of 0, $\pm V_d/3$, and $\pm 2V_d/3$; and the line voltage v_{AB} has three levels of voltage, including 0 and $\pm V_d$.

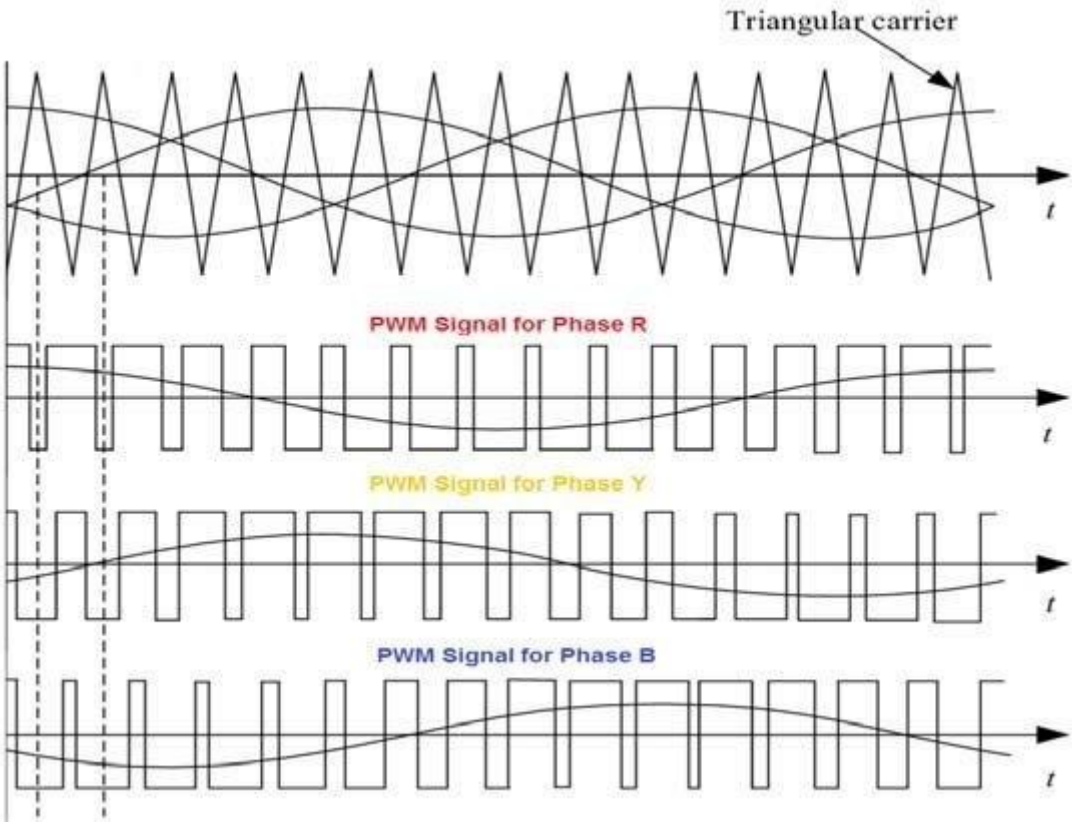

Figure 4.2. Three phase sinusoidal PWM signal generation

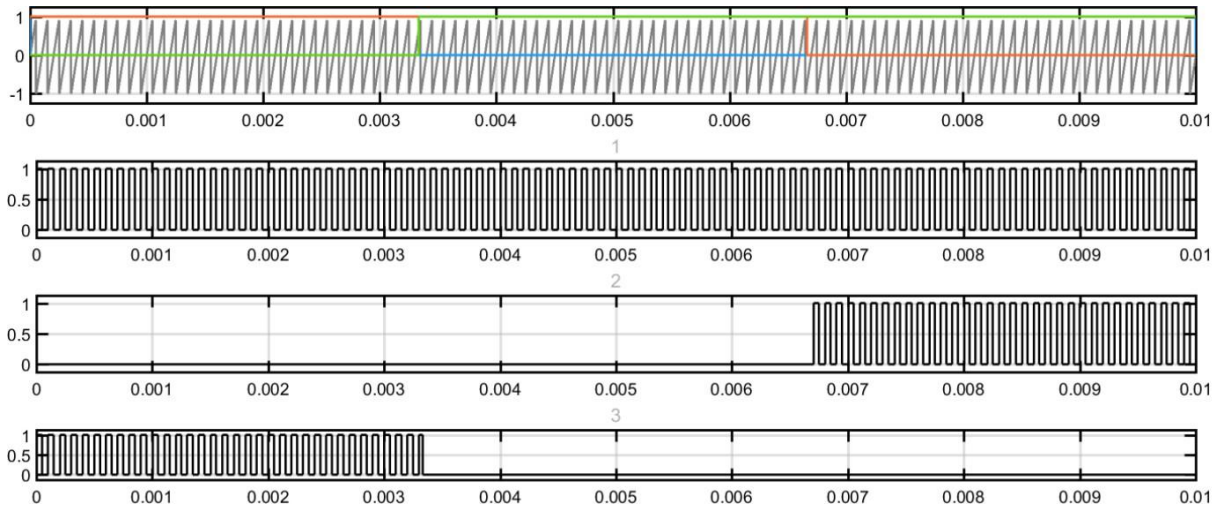

Figure 4.3. Three phase fixed PWM signal generation

Result:

Exp. No. 5 Date: ___/ ___/ ___

MODELING AND CONTROL OF DC MICROGRID

Aim:

To model a DC microgrid using different sources of energy to feed a nonlinear load.

Theory and Operation:

A DC microgrid is an advanced, localized power system that operates primarily on direct current (DC) and integrates various energy sources to supply electric power to connected loads. One of the key advantages of DC microgrids is their ability to efficiently integrate renewable energy sources, energy storage systems, and traditional power supplies with fewer conversion losses compared to conventional AC systems. In the scenario under consideration, the DC microgrid is designed to supply a load that demands 100 watts (W) of active power and 10 volt-amperes reactive (VAR) of reactive power at a constant DC bus voltage of 48 volts (V). This power is delivered using three sources: a PV array via a buck converter, a battery via a buck-boost converter, and an AC source via an uncontrolled rectifier followed by a buck converter.

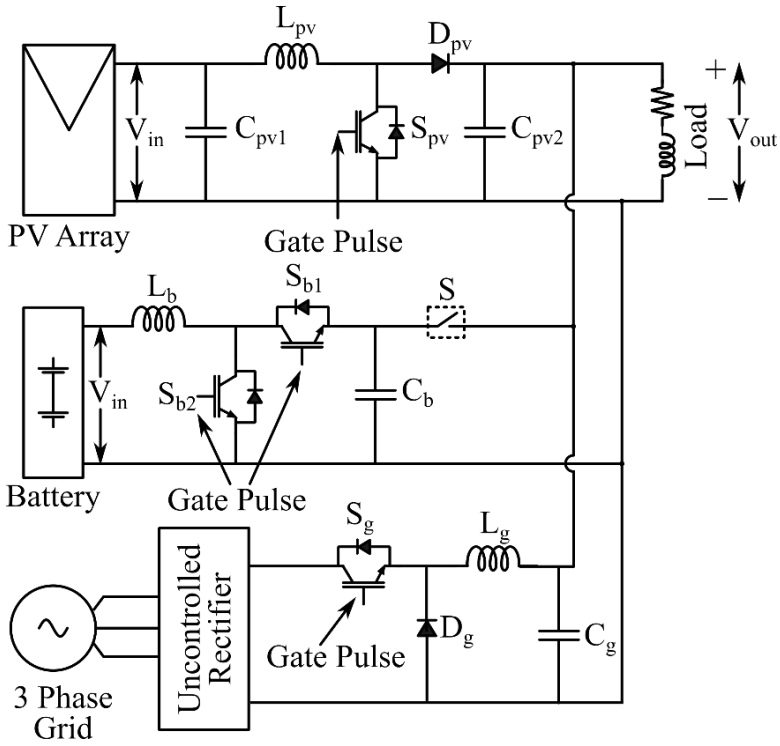

Figure 5.1. Schematic of 48V DC Microgrid

1. PV Array – Buck Converter

The photovoltaic (PV) array serves as the primary renewable energy source in the microgrid. It converts solar energy directly into DC electricity. However, the output voltage of a PV array varies depending on environmental conditions such as sunlight intensity and temperature. Since the microgrid operates at a fixed voltage of 48V, the output from the PV array must be regulated.

To achieve this, a buck converter is used. This DC-DC converter steps down the higher, fluctuating voltage from the PV array to the stable 48V required by the DC bus. The buck

converter also facilitates Maximum Power Point Tracking (MPPT), which ensures that the PV array operates at its optimal power point for maximum energy harvesting. The PV array primarily contributes to the active power demand of the load.

2. Battery – Buck-Boost Converter

The battery energy storage system (BESS) acts as a backup and a stabilizing unit in the microgrid. The battery can either discharge power to the grid or absorb excess power, depending on the system's power balance. Since the battery's voltage may be either above or below the 48V DC bus voltage, a buck-boost converter is required for its integration.

A buck-boost converter is a versatile power electronic device that can both step up and step down voltage levels. It also allows for bidirectional power flow, enabling the battery to either supply energy when the load demand exceeds generation or store energy when there is excess generation, such as during peak solar hours. The battery plays a crucial role in load leveling, voltage stabilization, and ensuring reliability. Additionally, through advanced control strategies, the converter connected to the battery can also help manage reactive power compensation, even in a DC system, by shaping current waveforms accordingly.

3. AC Source – Uncontrolled Rectifier and Buck Converter

The AC source serves as an auxiliary or backup energy supply, often in the form of a generator or utility connection. Since the microgrid operates on DC, the AC output must be converted to DC. This is achieved using an uncontrolled rectifier, which converts AC to unregulated DC. However, the output of the rectifier is not suitable for direct use due to voltage fluctuations and ripple.

To address this, a buck converter is placed after the rectifier to regulate and smooth the DC output to match the 48V DC bus. This two-stage conversion process ensures that the AC source can reliably contribute to the microgrid, particularly when solar generation is low or battery reserves are depleted. The buck converter stabilizes the DC output and ensures compatibility with the bus voltage.

Reactive Power in a DC Microgrid

Although DC systems inherently do not transmit reactive power in the conventional AC sense, reactive power support is still relevant when interfacing with AC components or managing system dynamics. In this system, the 10 VAR of reactive power might be required by AC loads connected through inverters or by interfacing converters that simulate or manage reactive power through advanced control techniques such as virtual impedance and droop control. These functions are typically implemented in the power electronics of the converters.

In conclusion, the DC microgrid efficiently supplies 100W active power and 10VAR reactive power at 48V using a combination of a PV array, a battery system, and an AC source. The PV array with a buck converter provides renewable energy, the battery with a buck-boost converter ensures stability and backup, and the AC source with a rectifier and buck converter adds reliability. Together, these sources work in harmony through power electronics to maintain voltage regulation, power balance, and support reactive power needs in a smart, resilient, and energy-efficient manner.

Result:

Exp. No. 6 Date: ___/ ___/ ___

SIMULATION OF A GRID CONNECTED WIND ENERGY SYSTEM WITH STATCOM AND INVESTIGATION OF POWER QUALITY IMPROVEMENT

Aim:

To simulate a grid connected wind energy system with a STATCOM for power quality improvement.

Theory and Operation:

As renewable energy sources, particularly wind energy, become more integrated into modern power systems, new challenges emerge concerning power quality, voltage stability, and system reliability. A wind energy system, especially when connected to the grid, often experiences issues such as voltage fluctuations, harmonics, flicker, and low power factor due to the intermittent nature of wind. To overcome these problems and ensure smooth power delivery, power quality improvement devices are essential. One of the most effective and dynamic devices used for this purpose is the STATCOM (Static Synchronous Compensator).

A STATCOM is a shunt-connected voltage source converter (VSC)-based Flexible AC Transmission System (FACTS) device. It is designed to provide fast-acting reactive power compensation in power systems, thereby improving voltage regulation and maintaining system stability. When used in a three-phase grid-connected wind energy system, it enhances the quality of power injected into the grid and maintains grid code compliance.

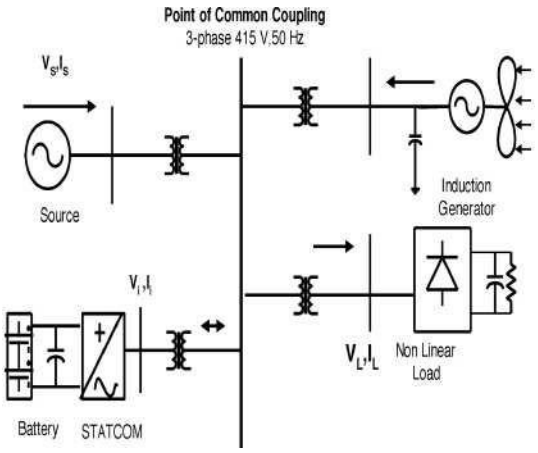

Figure 5.1. Grid Connected System for Power Quality Improvement

Key Functional Blocks of STATCOM

1. Voltage Source Converter (VSC)

The VSC is the core of the STATCOM. It converts DC voltage into a controllable AC voltage. The output voltage of the VSC can be adjusted in terms of magnitude and phase angle to control the flow of reactive power. When the converter voltage is higher than the grid voltage, the STATCOM injects reactive power; when lower, it absorbs reactive power. This

dynamic control enables rapid support for voltage regulation at the point of common coupling (PCC) in the wind energy system.

2. DC Energy Storage / DC Link Capacitor

The DC link provides the necessary voltage for the VSC to generate AC output. In most STATCOM designs, a DC capacitor is used as the energy storage element to maintain a constant DC voltage. Although STATCOM does not typically supply real power continuously, this capacitor stabilizes the VSC and supports short bursts of active power during transient disturbances.

3. Controller (Control System)

The control system monitors key parameters such as grid voltage, current, reactive power, and power factor. It uses PI or more advanced control algorithms to regulate the output of the VSC in real time. The controller adjusts the modulation index and firing angle of the converter switches to ensure that the desired amount of reactive power is injected or absorbed, maintaining a stable voltage at the PCC and improving power quality.

4. Pulse Width Modulation (PWM) Generator

The PWM generator is part of the control system that controls the switching of the IGBT (Insulated Gate Bipolar Transistor) switches in the VSC. By varying the duty cycle of the PWM signals, it controls the amplitude and phase of the AC output from the VSC, ensuring efficient and smooth operation of the STATCOM.

5. Coupling Transformer

The coupling transformer connects the output of the STATCOM to the grid. It provides isolation between the STATCOM and the power system and matches the voltage levels to ensure efficient power exchange between the STATCOM and the grid.

In a three-phase grid-connected wind energy system, the STATCOM plays a crucial role in maintaining power quality by:

- Regulating voltage at the PCC, especially during wind speed fluctuations.
- Compensating for reactive power, thus maintaining a high power factor.
- Reducing voltage flicker caused by sudden changes in wind speed or load conditions.
- Suppressing harmonics introduced by the wind turbine's power electronics.

Result: