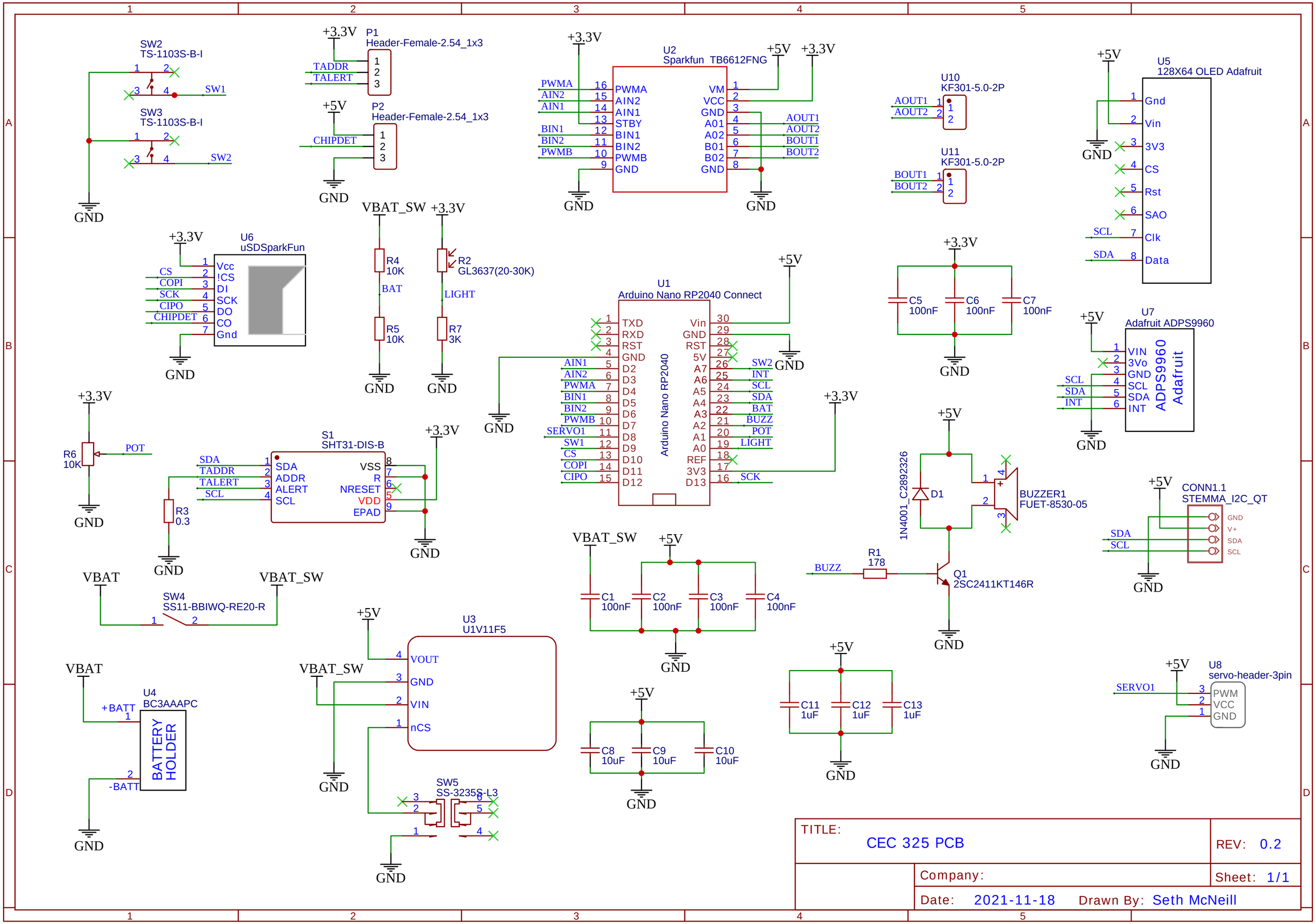

TITLE: CEC 325 PCB	REV: 0.2
Company:	Sheet: 1/1
Date: 2021-11-18 Drawn By: Seth McNeill	