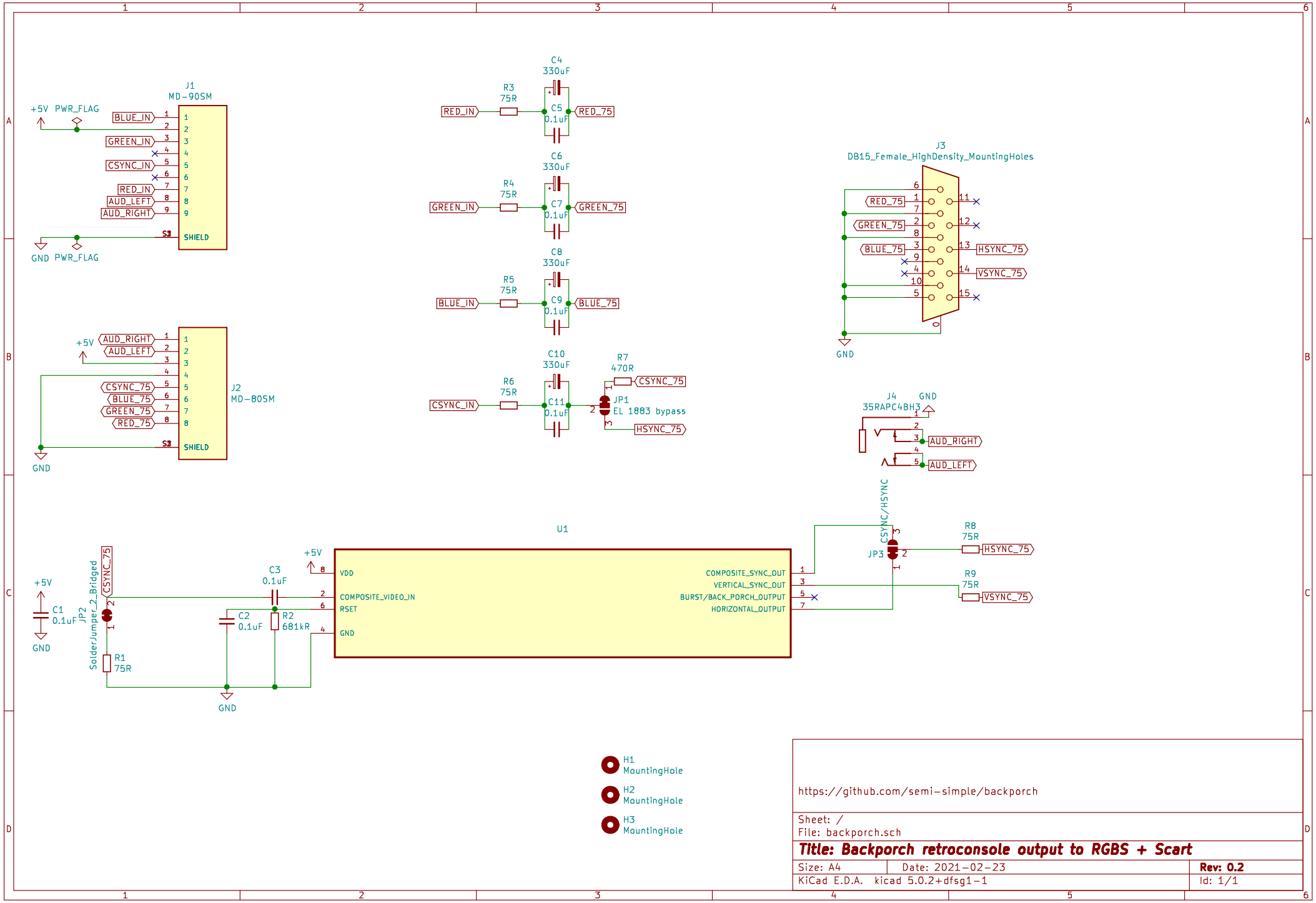

https://github.com/semi-simple/backporch

Sheet: /
File: backporch.sch

Title: Backporch retroconsole output to RGBS + Scart

Size: A4	Date: 2021-02-23	Rev: 0.2
KiCad E.D.A. kicad 5.0.2+dfsg1-1		Id: 1/1