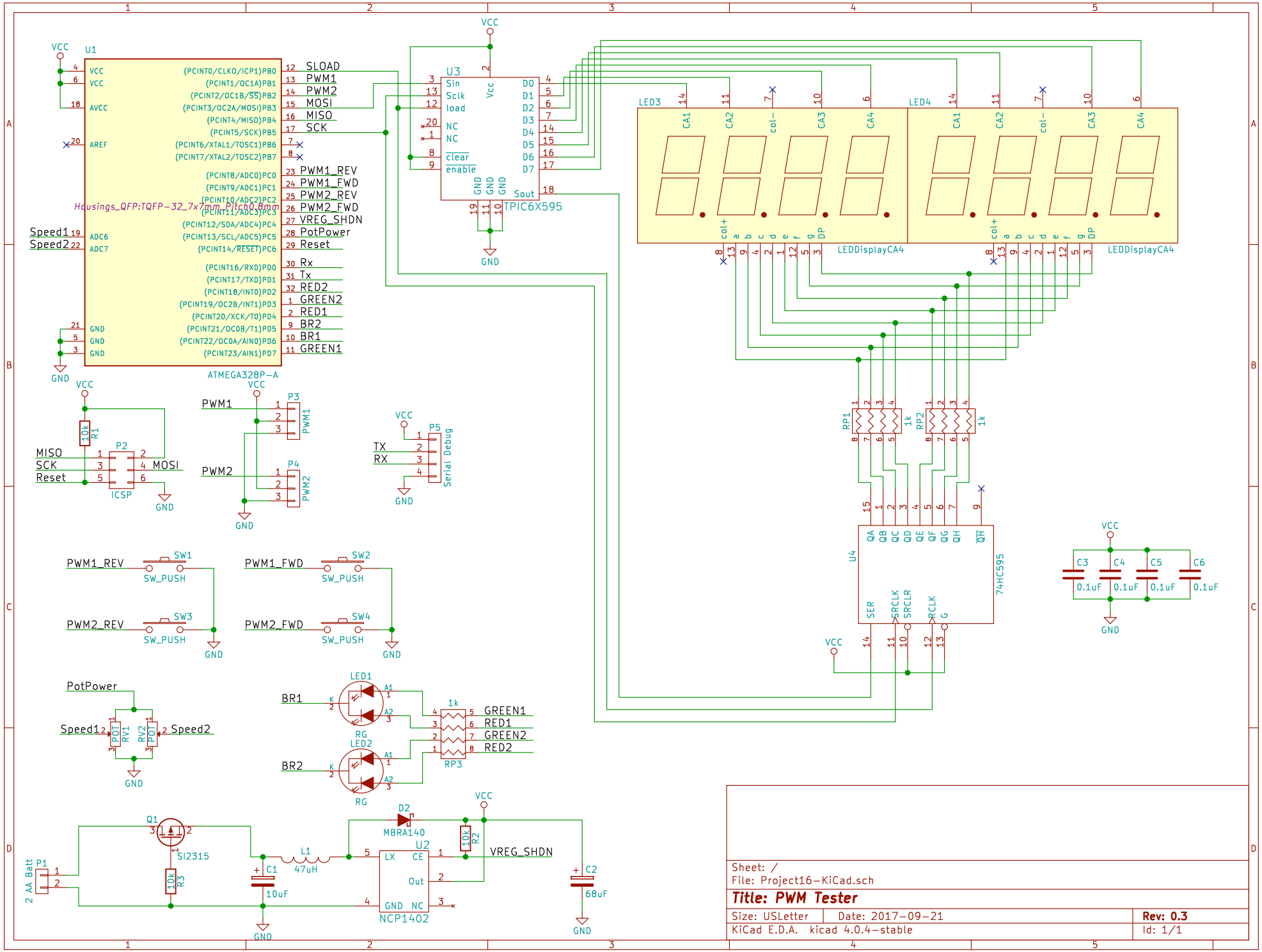
U1
ATMEGA328P-A
Housings_QFP:TQFP-32_7x7mm_Pitch0.8mm
U3
TPIC6X595
LED3
LED4
LEDDisplayCA4
U4
74HC595
P1
2 AA Batt
Q1
SI2315
D2
MBRA140
U2
NCP1402
L1
47uH
C1
10uF
C2
68uF
VREG_SHDN
P2
ICSP
P3
P4
P5
Serial Debug
SW1
SW2
SW3
SW4
SW_PUSH
PWM1_REV
PWM1_FWD
PWM2_REV
PWM2_FWD
PotPower
Speed1
Speed2
RV1
RV2
LED1
LED2
RP3
RP1
RP2
C3
C4
C5
C6
0.1uF
VCC
GND
Sheet: /
File: Project16-KiCad.sch
Title: PWM Tester
Size: USLetter
Date: 2017-09-21
Rev: 0.3
KiCad E.D.A. kicad 4.0.4-stable
Id: 1/1