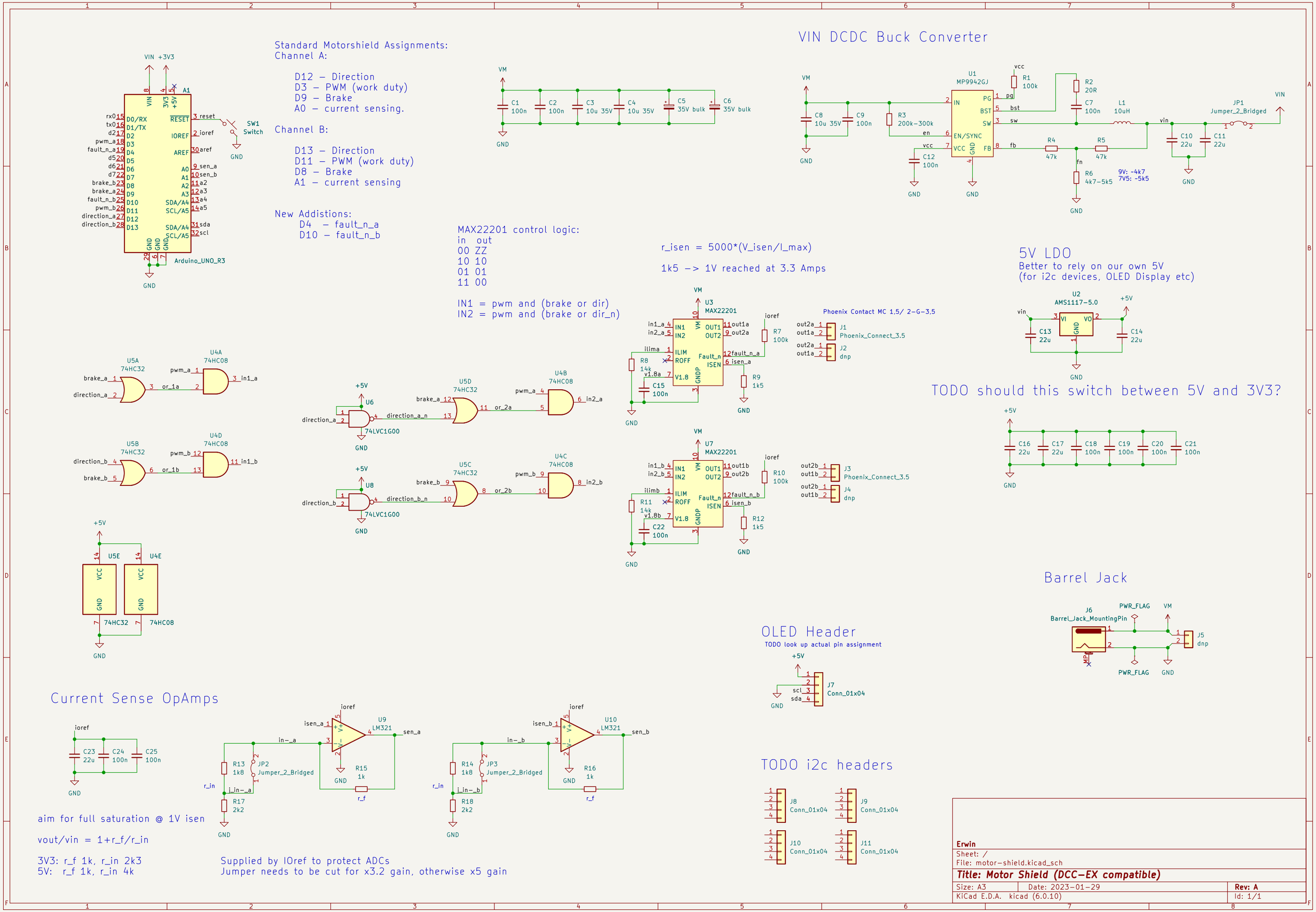
Standard Motorshield Assignments:
Channel A:
D12 – Direction
D3 – PWM (work duty)
D9 – Brake
A0 – current sensing.
Channel B:
D13 – Direction
D11 – PWM (work duty)
D8 – Brake
A1 – current sensing
New Addistions:
D4 – fault_n_a
D10 – fault_n_b
Arduino_UNO_R3
SW1 Switch
VIN DCDC Buck Converter
U1 MP9942GJ
R1 100k
R2 20R
C7 100n
L1 10uH
JP1 Jumper_2_Bridged
R3 200k–300k
R4 47k
R5 47k
R6 4k7–5k5
9V: ~4k7
7V5: ~5k5
C8 10u 35V
C9 100n
C10 22u
C11 22u
C12 100n
C1 100n
C2 100n
C3 10u 35V
C4 10u 35V
C5 35V bulk
C6 35V bulk
MAX22201 control logic:
in out
00 ZZ
10 10
01 01
11 00
IN1 = pwm and (brake or dir)
IN2 = pwm and (brake or dir_n)
r_isen = 5000*(V_isen/I_max)
1k5 –> 1V reached at 3.3 Amps
U3 MAX22201
U7 MAX22201
R7 100k
R8 14k
R9 1k5
R10 100k
R11 14k
R12 1k5
C15 100n
C22 100n
Phoenix Contact MC 1,5/ 2-G-3,5
J1 Phoenix_Connect_3.5
J2 dnp
J3 Phoenix_Connect_3.5
J4 dnp
5V LDO
Better to rely on our own 5V
(for i2c devices, OLED Display etc)
U2 AMS1117-5.0
C13 22u
C14 22u
TODO should this switch between 5V and 3V3?
C16 22u
C17 22u
C18 100n
C19 100n
C20 100n
C21 100n
U5A 74HC32
U4A 74HC08
U5B 74HC32
U4D 74HC08
U5D 74HC32
U4B 74HC08
U5C 74HC32
U4C 74HC08
U6 74LVC1G00
U8 74LVC1G00
U5E 74HC32
U4E 74HC08
Barrel Jack
J6 Barrel_Jack_MountingPin
J5 dnp
OLED Header
TODO look up actual pin assignment
J7 Conn_01x04
Current Sense OpAmps
C23 22u
C24 100n
C25 100n
U9 LM321
U10 LM321
R13 1k8
R14 1k8
R15 1k
R16 1k
R17 2k2
R18 2k2
JP2 Jumper_2_Bridged
JP3 Jumper_2_Bridged
aim for full saturation @ 1V isen
vout/vin = 1+r_f/r_in
3V3: r_f 1k, r_in 2k3
5V: r_f 1k, r_in 4k
Supplied by IOref to protect ADCs
Jumper needs to be cut for x3.2 gain, otherwise x5 gain
TODO i2c headers
J8 Conn_01x04
J9 Conn_01x04
J10 Conn_01x04
J11 Conn_01x04
Erwin
Sheet: /
File: motor-shield.kicad_sch
Title: Motor Shield (DCC-EX compatible)
Size: A3
Date: 2023-01-29
Rev: A
KiCad E.D.A. kicad (6.0.10)
Id: 1/1