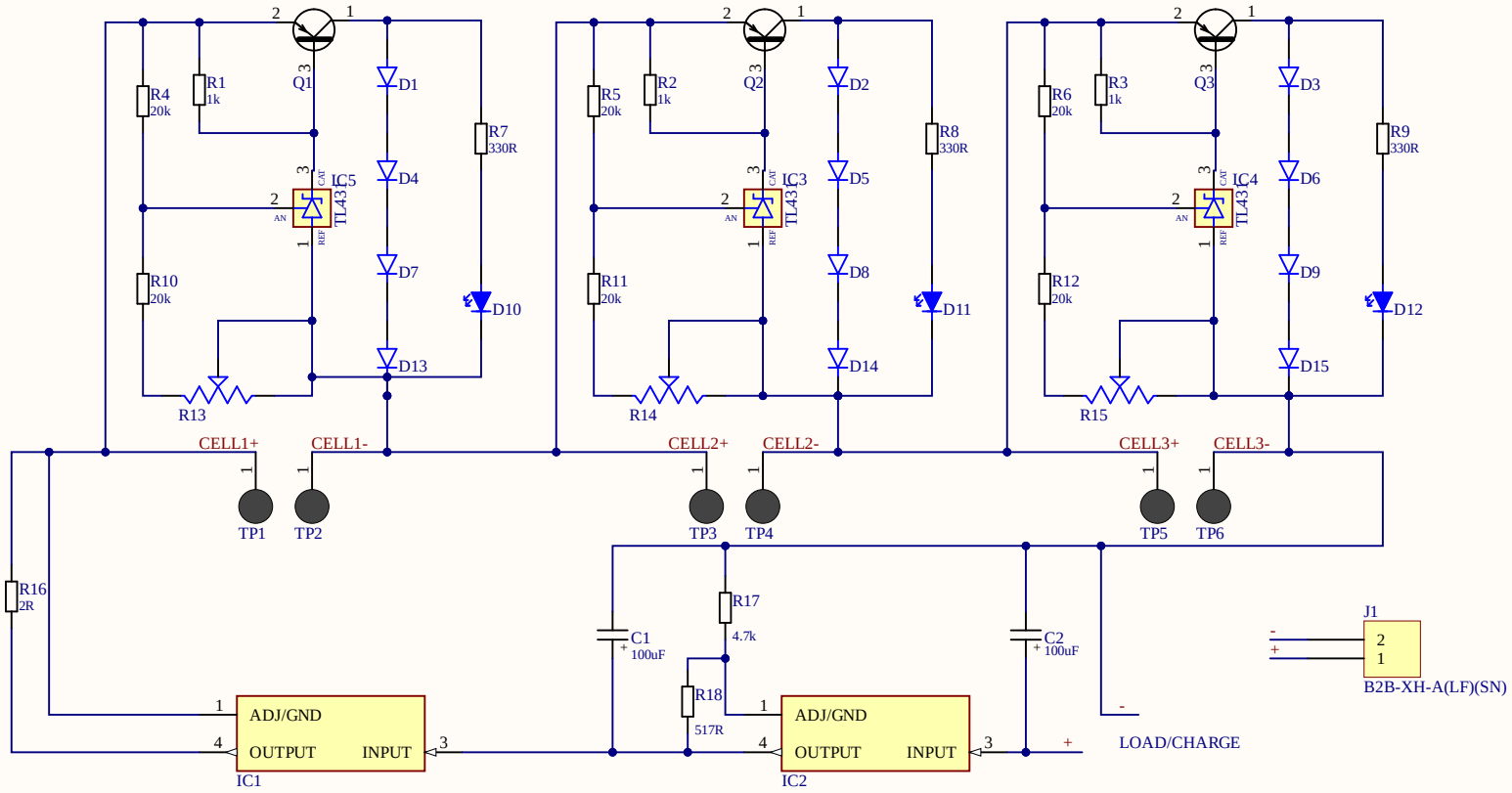

Title		
Size A4	Number	Revision
Date: 11.03.2022		Sheet of
File: D:\Altium klasörü\..\Sheet1.SchDoc		Drawn By:

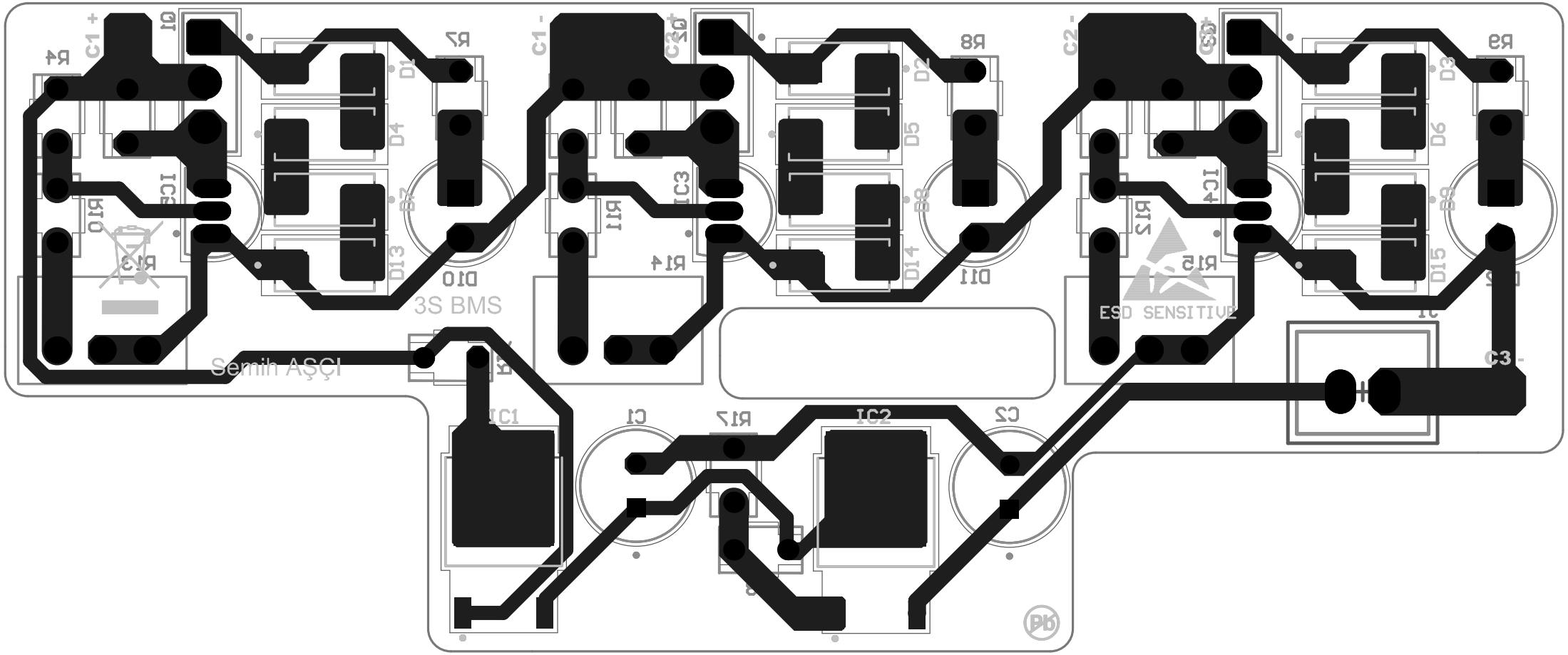
3S BMS
Semih AŞÇI
ESD SENSITIVE
C1 +
C1 -
C2 -
C3 -
IC1
IC2
C1
C2

Board Stack Report