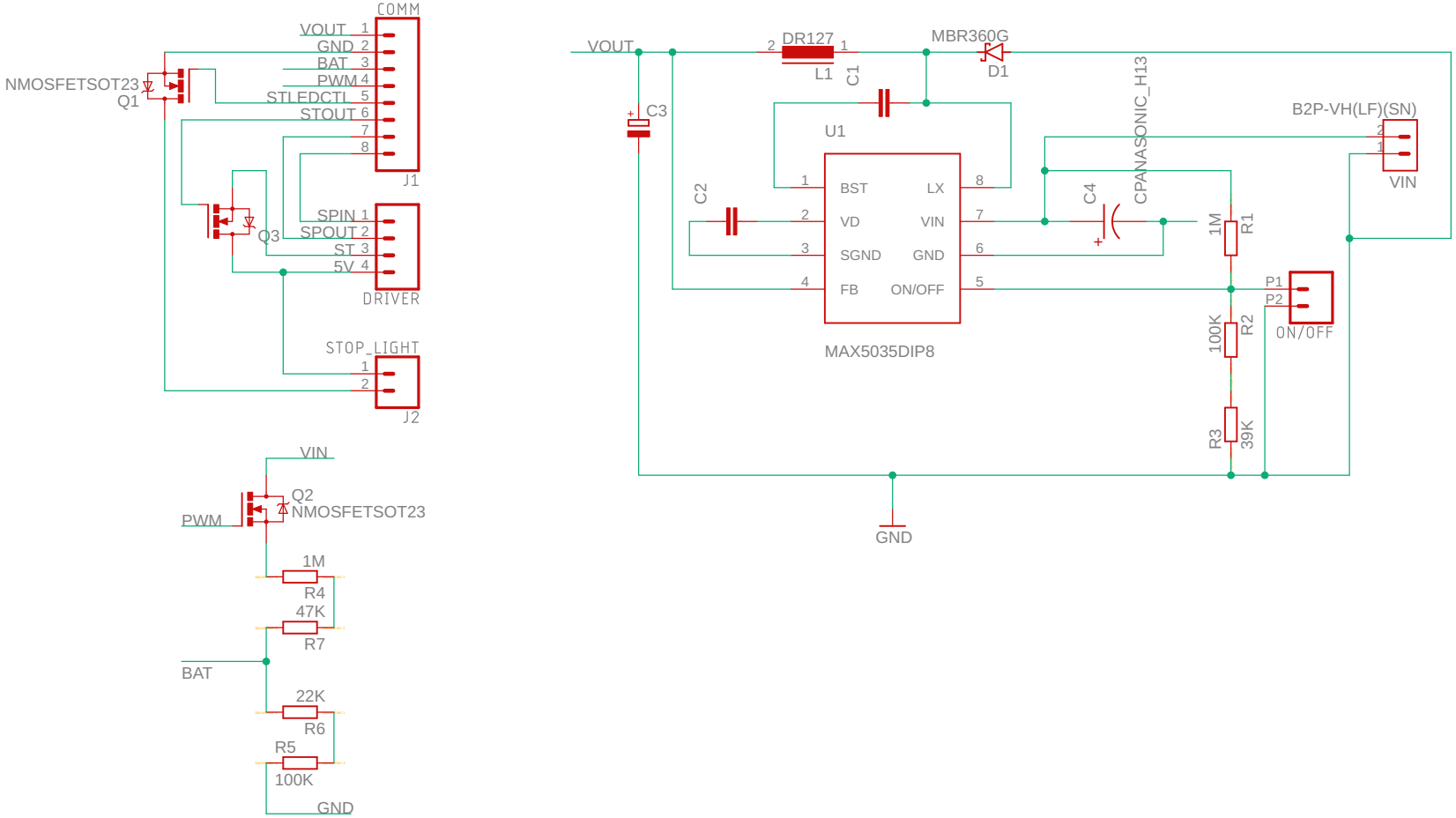
COMM
VOUT 1
GND 2
BAT 3
PWM 4
STLEDCTL 5
STOUT 6
7
8
J1
NMOSFETSOT23
Q1
Q3
SPIN 1
SPOUT 2
ST 3
5V 4
DRIVER
STOP_LIGHT
1
2
J2
VIN
Q2
NMOSFETSOT23
PWM
1M
R4
47K
R7
BAT
22K
R6
R5
100K
GND
VOUT
DR127
L1
C1
MBR360G
D1
C3
U1
C2
BST
VD
SGND
FB
LX
VIN
GND
ON/OFF
MAX5035DIP8
C4
CPANASONIC_H13
B2P-VH(LF)(SN)
VIN
1M
R1
P1
P2
ON/OFF
100K
R2
R3
39K
GND