This document corresponds to Chapter 2 of the doctoral dissertation:

A Hysteresis Model for the Semiconductor–Metal Transition in VO_2 Thin Films

Luiz Alberto Luz de Almeida

Thesis Advisors

Gurdip Singh Deep, Ph.D.

Antonio Marcus Nogueira Lima, Dr.Ing.

Helmut Neff, Ph.D.

Graduate Program in Electrical Engineering
Universidade Federal de Campina Grande — UFCG

Campina Grande
Paraíba — Brazil, 2003

Chapter 2

Experimental Platform

2.1 Introduction

The hysteresis in the $R \times T$ characteristic of VO_2 is well known and extensively reported in the literature [1] with respect to the major loop. However, virtually no information is available regarding minor loops and the influence of thermal history on the hysteresis trajectory. In order to develop a mathematical model describing the hysteretic $R \times T$ relationship in vanadium dioxide, the appropriate choice of experimental conditions for data collection is of paramount importance. Equally important is a detailed understanding of these experimental conditions so that phenomena of interest can be distinguished from possible disturbances introduced by the experimental platform.

From the outset of this investigation, it was necessary to gain a deeper understanding of the thermal dynamics involved in the film-temperature cycling system and their effects on the film resistance. In the initial experiments, the strong dependence of the film behaviour on its prior thermal history was not yet recognised. As a consequence, the first thermal cycling system developed in this investigation lacked adequate precision, making it difficult to interpret the apparently inconsistent effects observed during the experiments. Doubts remained as to whether the observed minor hysteresis loops were a consequence of a static memory of the film or an artefact of the thermal dynamics. It was further observed that small discrepancies between the measured temperature and the actual temperature at the film surface, caused by high rates of temperature variation with time, produce distortions in the shape of the hysteresis loop, a finding that required additional investigation [2]. The small oscillations produced by a preliminary thermal cycling system, of the order of $\pm 0.5\,^{\circ}\mathrm{C}$, were initially considered incapable of disturbing the experiment, a hypothesis that proved to be incorrect as the studies progressed. The strong thermal dependence of the film in the transition region results in the accumulation of the effect of these oscillations, giving rise to anomalies in the $R \times T$ characteristic. Through the reduction of the amplitude of these oscillations, the aforementioned anomalies were observed only under special circumstances [3]. It is therefore evident that a precise thermal cycling system, in which the dynamic characteristics are well understood, is indispensable.

In this chapter, the experimental platform constructed for the characterisation of the vanadium dioxide thin film is described. A nonlinear dynamic model for the platform is proposed, and a simplified model is derived; the latter is subsequently employed in the

design of a temperature controller. The origin of the control error is also investigated.

2.2 Thermal Chamber for VO_2 Film Characterisation

In order to study the $R \times T$ characteristics of VO_2, it was necessary to build a system capable of varying the film temperature according to arbitrary waveforms, satisfying the following specifications:

- Film temperature variation between 20 and 80 °C, a range deemed satisfactory for modelling the phase transition;
- Capability of varying the rate $\frac{dT}{dt}$ between 10 and 0.01 °C min^{-1} for arbitrary temperature references;
- Ambient temperature ranging from 10 to 40 °C;
- Film resistance measurement in the range from 100.0 to 120,000.0 ohms, a range satisfactory for the films available in the laboratory;
- Steady-state error of ±0.02 °C, required to avoid the influence of oscillations on the thermal history of the film.

Given that the ambient temperature T_a may exceed the desired film temperature, the use of a thermoelectric module[1] (TEM) was required to enable cooling of the sensor. This device consists of several semiconductors connected electrically in series and sandwiched between two ceramic plates (see Figure 2.1a). When connected to a direct current source, the electrical current flowing through the elements drives heat from one side to the other. As a consequence, one side becomes hot and the other cold. If the current direction is reversed, the direction of heat pumping is likewise reversed.

The VO_2 thin-film samples used in the experiments were provided by Professor Igor A. Khrebtov of the S.I. Vavilov State Optical Institute, St. Petersburg, Russia. These samples have a thickness of 1000 Å and are deposited on quasi-insulating silicon substrates, whose dimensions are shown in Figure 2.1(b). Each sample was mounted on the TEM inside a thermally insulated structure, as illustrated in Figures 2.1(c) and (d). Film temperature was measured using a thermistor approximately 0.5 mm in diameter, placed in contact with the film substrate and the surface of the thermoelectric device through thermal compound.

The TEM employed is manufactured by Melcor Corporation, model CP 1.0-31-06L, with a maximum current of 3.0 A, a maximum voltage of 3.75 V, and a maximum heat-pumping capacity of 6.3 W. Under vacuum conditions, this model can achieve a maximum temperature difference of 63 °C between the cold and hot faces. Under field experimental conditions this difference is reduced; in the present assembly a maximum difference of 40 °C between the device faces was achieved.

[1] A detailed description of thermoelectric modules can be found at www.ferrotec-america.com.

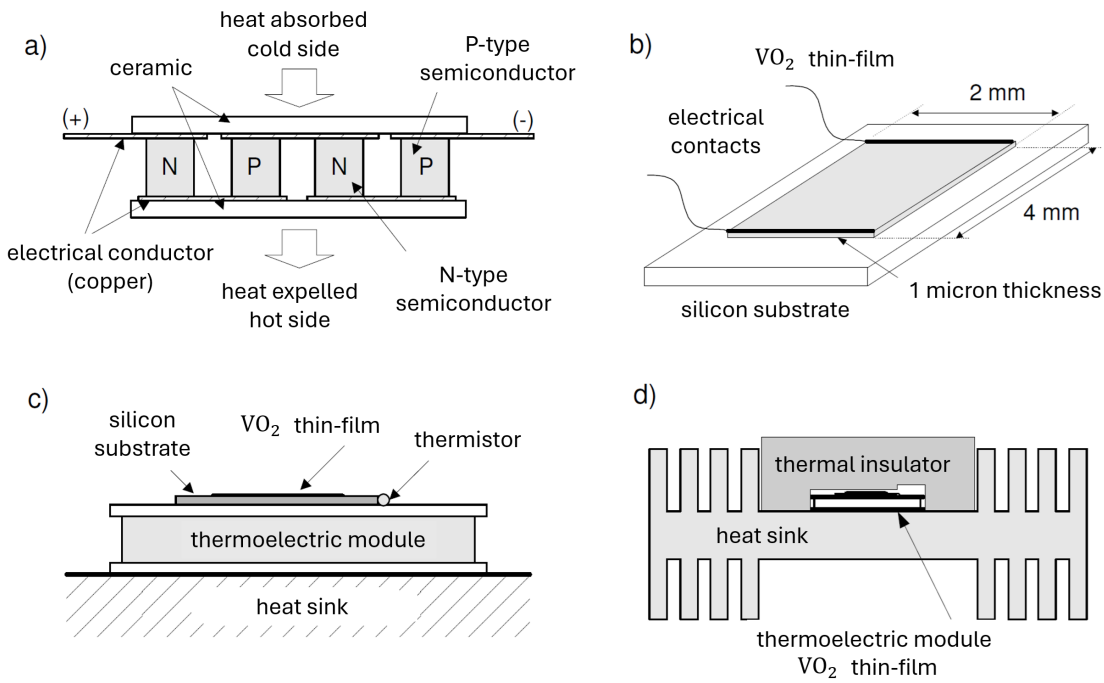

Figure 2.1: Components employed and assembly details of the thermal chamber: (a) thermoelectric module; (b) dimensions of the films used in the experiments; (c) assembly of the film and thermistor on the thermoelectric module; and (d) complete thermal chamber assembly.

2.3 Dynamic Model of the Thermal Chamber

The thermal behaviour of a device can be studied through the heat balance equation [4]. The quantity of heat Q [in J] stored in a body can be calculated through the following equation

$$\frac{dQ}{dt} = (P_e - P_s) + (P_g - P_a), \tag{2.1}$$

where P_e and P_s are the heat fluxes [in $\mathrm{J\,s^{-1}} = \mathrm{W}$] transported into and out of the body, respectively. In addition to the flux passing through the body, the heat fluxes P_g and P_a may be generated or absorbed, respectively, within the body.

When heat flows through a body, its temperature changes. To express this temperature change, equation (2.1) can also be written as

$$C\frac{dT}{dt} = (P_e - P_s) + (P_g - P_a), \tag{2.2}$$

where $C = mc$ is the thermal capacitance of the body [in $\mathrm{J\,K^{-1}}$], m is the body mass [in kg], and c is its specific heat [in $\mathrm{J\,kg^{-1}\,K^{-1}}$].

Heat flux into and out of a body occurs through three distinct mechanisms: conduction, convection, and radiation. A heat flux P between two bodies produces a temperature difference ΔT, which can be characterised by the thermal conductance G between them, defined as

$$G = \frac{P}{\Delta T}, \quad [\mathrm{W\,K^{-1}}]. \tag{2.3}$$

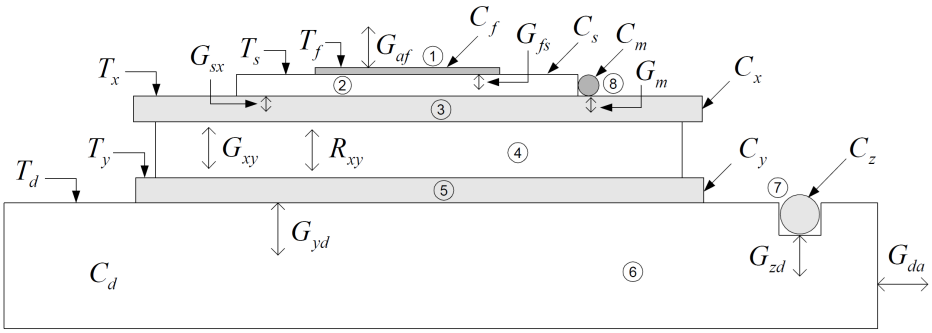

Figure 2.2: Description of the thermal quantities of the plant, positioned relative to the various components of the thermal chamber: 1) VO_2 film; 2) film substrate; 3) upper plate of the TEM; 4) central layer of the TEM; 5) lower plate of the TEM; 6) heat sink; 7) heat sink heating resistor; 8) thermistor for temperature measurement.

Figure 2.2 presents the construction details of the thermal chamber and the associated thermal quantities, defined as follows:

- G_{af}: thermal conductance between the film and the ambient, considered negligible owing to the thermal insulation;
- T and C_f: temperature and thermal capacitance of the film;
- G_{fs}: thermal conductance between the film and the substrate;
- T_s and C_s: temperature and thermal capacitance of the substrate;
- G_{sx}: thermal conductance between the substrate and the upper plate of the TEM;
- T_x and C_x: temperature and thermal capacitance of the upper plate of the TEM;
- G_{xy}: thermal conductance between the upper and lower plates of the TEM;
- T_y and C_y: temperature and thermal capacitance of the lower plate of the TEM;
- G_{yd}: thermal conductance between the lower plate of the TEM and the heat sink;
- T_d and C_d: temperature and thermal capacitance of the heat sink;
- G_{da}: thermal conductance between the heat sink and the ambient;
- G_{zd}: thermal conductance between the heating resistor and the heat sink;
- T_m and C_m: temperature and thermal capacitance of the thermistor (temperature sensor);
- G_{xm}: thermal conductance between the upper plate of the TEM and the sensing element of the temperature sensor.

When a current I_c flows through the TEM, the heat fluxes at the upper and lower plates

are respectively given by [5, 6, 7]

$$\begin{aligned} \frac{dQ_x}{dt} &= P_x - G_{xy}\left(T_x - T_y\right) \\ \frac{dQ_y}{dt} &= P_y + G_{xy}\left(T_x - T_y\right) \end{aligned} \quad , \quad [\mathrm{J\,s^{-1}}], \tag{2.4}$$

where $G_{xy}(T_x - T_y)$ is the conductive heat flux between the upper and lower plates of the TEM, and P_x and P_y are the active heat powers, given by

$$\begin{aligned} P_x &= I_c^2 \frac{R_{xy}}{2} + \kappa_s T_x I_c \\ P_y &= I_c^2 \frac{R_{xy}}{2} - \kappa_s T_y I_c \end{aligned} \quad , \quad [\mathrm{W}], \tag{2.5}$$

in which R_{xy} is the electrical resistance between the upper and lower plates of the TEM [in Ω] and κ_s is the Seebeck coefficient [in $\mathrm{V\,K^{-1}}$]. The term $I_c^2 R_{xy}$ in (2.5) is associated with Joule heating of the TEM. Half of this Joule power, $I_c^2 R_{xy}/2$, is attributed to each plate. The terms $+\kappa_s T_x I_c$ and $-\kappa_s T_y I_c$ are associated with the Peltier effect. If the current flows in a given direction such that $I_c > 0$, the upper plate generates a heat flux $+\kappa_s T_x |I_c|$ in addition to the Joule power $I_c^2 R_{xy}/2$, causing the temperature T_x to increase. Simultaneously, with $I_c > 0$, the lower plate absorbs a heat flux $-\kappa_s T_y |I_c|$, added to the Joule power $I_c^2 R_{xy}/2$.

The lower plate of the TEM was placed in thermal contact with a heat sink of mass much greater than that of the TEM. As a consequence, the heat flux absorbed or generated at the lower plate flows into the heat sink, maintaining the temperature T_y at an approximately constant value equal to the heat-sink temperature T_d. Since T_y is kept constant, the upper plate temperature T_x increases when $I_c > 0$. This is the heating effect of the upper plate of the TEM, on which the substrate/film assembly is placed. If the current direction is reversed ($I_c < 0$), the upper plate absorbs a heat flux $-\kappa_s T_x |I_c|$, added to the Joule power $I_c^2 R_{xy}/2$, thereby reducing T_x relative to T_d. According to equation $(2.5)_1$, this temperature reduction occurs only for current values satisfying $P_x < 0$, or equivalently $-\frac{2\kappa_s T_x}{R_{xy}} < I_c < 0$. Figure 2.3 shows the behaviour of the active heat power P_x as a function of the control current I_c in the TEM. In regions 1 and 3, the heat flux P_x generated at the upper plate is positive, causing T_x to increase. It is notable that, in region 3, even for $I_c < 0$, the heat flux P_x can become positive, thereby increasing T_x. In region 2, the heat flux P_x is negative, causing T_x to decrease.

Considering the elements presented in Figure 2.2 together with (2.2) and (2.4), the following lumped-parameter model is proposed for the thermal chamber:

$$\begin{aligned} C_f \dot{T}_f &= P + P_r - G_{fs}(T_f - T_s) \\ C_s \dot{T}_s &= G_{fs}(T_f - T_s) - G_{sx}(T_s - T_x) \\ C_x \dot{T}_x &= P_x + G_{sx}(T_s - T_x) - G_{xy}(T_x - T_y) \\ C_y \dot{T}_y &= P_y + G_{xy}(T_x - T_y) - G_{yd}(T_y - T_d) \\ C_d \dot{T}_d &= P_z + G_{yd}(T_y - T_d) - G_{da}(T_d - T_a) \\ C_m \dot{T}_m &= G_{xm}(T_x - T_m) \end{aligned} \quad , \tag{2.6}$$

where P_r is the radiation power absorbed by the film, $P = RI^2$ is the Joule heat flux generated in the film of electrical resistance R subjected to a bias current I, and $P_z = I_z^2 R_z$

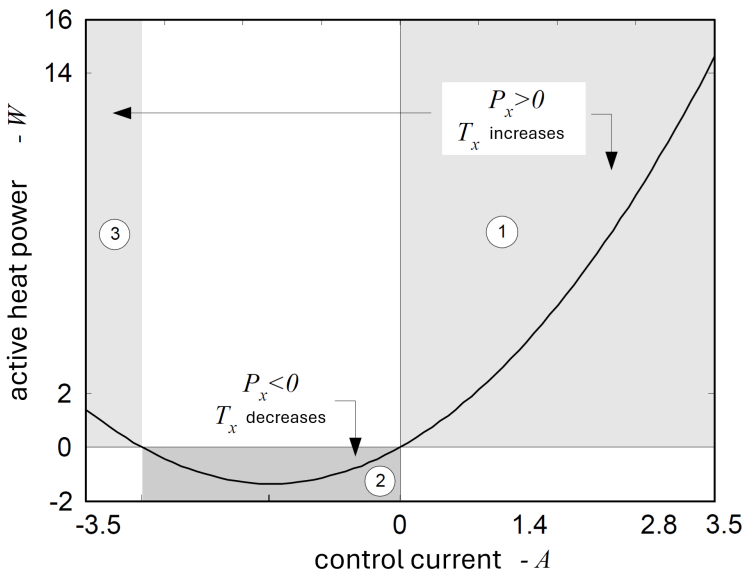

Figure 2.3: Active heat power P_x as a function of the control current I_c in the TEM.

represents the heat flux in the heat sink, produced by the heating current I_z flowing through the heating resistor R_z. The power P_z is required to implement an open-loop temperature control action (see Section 2.7).

2.3.1 Characterisation of the Measurement Thermistor

Temperature measurement of the film within the thermal chamber is performed using a thermistor. This type of sensor exhibits a nonlinear relationship between temperature variation and electrical resistance variation. It is therefore necessary to characterise this relationship in terms of a static model.

To convert the thermistor resistance R_t into the temperature T_m, it is proposed to represent the characteristic $R_t \times T_m$ through a sum of exponentials:

$$T_m = \sum_{k=1}^{M} c_k \exp\left(\lambda_k R_t\right), \tag{2.7}$$

where c_k and λ_k are arbitrary constants and M is the number of exponential terms. For $M = 3$, equation (2.7) expands to

$$T_m = c_1 e^{\lambda_1 R_t} + c_2 e^{\lambda_2 R_t} + c_3 e^{\lambda_3 R_t}. \tag{2.8}$$

Although equation (2.8) is linear in the parameters c_i, it is nonlinear in the parameters λ_i, which complicates their simultaneous estimation. However, if λ_1, λ_2, and λ_3 are known *a priori* from an initial estimate, the parameters c_1, c_2, and c_3 can be obtained by Ordinary Least Squares (OLS) through the normal equations [8]:

$$\mathbf{c} = \left[\mathbf{\Phi}^T \mathbf{\Phi}\right]^{-1} \mathbf{\Phi}^T \mathbf{T}_m, \tag{2.9}$$

where $\mathbf{c} = \begin{bmatrix} c_1 & c_2 & c_3 \end{bmatrix}^T$, $\mathbf{T}_m = \begin{bmatrix} T_1 & T_2 & \cdots & T_N \end{bmatrix}^T$ is the set of N temperature values used to characterise the thermistor, and $\left[\mathbf{\Phi}^T\mathbf{\Phi}\right]^{-1}\mathbf{\Phi}^T$ is the pseudo-inverse of the matrix $\mathbf{\Phi}$, defined as

$$\mathbf{\Phi} = \begin{bmatrix} e^{\lambda_1\tilde{R}_1} & e^{\lambda_2\tilde{R}_1} & e^{\lambda_3\tilde{R}_1} \\ e^{\lambda_1\tilde{R}_2} & e^{\lambda_2\tilde{R}_2} & e^{\lambda_3\tilde{R}_2} \\ \vdots & \vdots & \vdots \\ e^{\lambda_1\tilde{R}_N} & e^{\lambda_2\tilde{R}_N} & e^{\lambda_3\tilde{R}_N} \end{bmatrix}, \tag{2.10}$$

in which $\tilde{R}_1$, $\tilde{R}_2$, ..., $\tilde{R}_N$ are the experimental values of the thermistor resistance R_t obtained for the corresponding temperatures T_1, T_2, ..., T_N.

The solution (2.9) is equivalent to minimising the following cost function:

$$J_{LS}\left(\mathbf{c}, \boldsymbol{\lambda} = \text{constant}\right) = \sum_{k=1}^{N} e_k^2, \tag{2.11}$$

where $e_k = T_k - (c_1 e^{\lambda_1 R_k} + c_2 e^{\lambda_2 R_k} + c_3 e^{\lambda_3 R_k})$. After computing c_1, c_2, and c_3, the values of λ_1, λ_2, and λ_3 are estimated using the Nelder–Mead algorithm [9] applied to the cost function

$$J_{NM}\left(\mathbf{c} = \text{constant}, \boldsymbol{\lambda}\right) = \sum_{k=1}^{N} e_k^2. \tag{2.12}$$

After the first estimation of λ_1, λ_2, and λ_3, the values of c_1, c_2, and c_3 are recomputed using (2.9), enabling a new estimation of λ_1, λ_2, and λ_3. This iterative process is repeated until J_{NM} falls below a prescribed threshold. For the thermistor employed in the thermal chamber implementation, the estimated parameter values are $c_1 = 52.0$, $c_2 = -0.0029$, $c_3 = 68.6$, $\lambda_1 = -0.001$, $\lambda_2 = 0.00053$, and $\lambda_3 = -0.00018$.

2.4 Nonlinear Model Parameter Estimation

The continuous-time nonlinear dynamic model $(2.6)_{1...5}$ describes the behaviour of the TEM and heat-sink assembly, in which the temperature T_x is the controlled variable driven by the control current I_c. TEM manufacturers provide typical values for the Seebeck coefficient κ_s and the electrical resistance R_{xy} between the upper and lower plates. However, these values vary within a certain range from one component to another within the same production batch. It is therefore necessary to estimate the static parameters κ_s and R_{xy} jointly with the dynamic thermal parameters, subject to physical constraints.

To quantify the discrepancy between experimental results and model predictions, the *normalised root-mean-square error* (NRMSE) is employed:

$$J_{MQN}(\theta) = \sqrt{\frac{\sum_{i=1}^{N}(x_i - \tilde{x}_i)^2}{\sum_{i=1}^{N}\tilde{x}_i^2}} \times 100\%, \tag{2.13}$$

where x_i denotes the model data, $\tilde{x}_i$ the experimental data, N the number of data points, and $\theta = \begin{bmatrix} C_x & C_y & C_d & G_{xy} & G_{yd} & G_{da} & \kappa_s & R_{xy} \end{bmatrix}^T$ is the parameter vector to be estimated.

To ensure that the estimated parameters are physically admissible, the following constrained optimisation problem is formulated:

$$\begin{gathered} \text{minimise} \quad J_{MQN}(\theta) \\ \text{subject to:} \\ \kappa_s^{\min} < \kappa_s < \kappa_s^{\max} \\ R_{xy}^{\min} < R_{xy} < R_{xy}^{\max} \\ C_d >> C_y \\ C_d >> C_x \\ C_y > C_x \\ G_{yd} >> G_{xy} \\ P_z = 0, \end{gathered} \tag{2.14}$$

where $\kappa_s^{\min}$, $R_{xy}^{\min}$, $\kappa_s^{\max}$, and $R_{xy}^{\max}$ are the minimum and maximum allowable values for the Seebeck coefficient and the electrical resistance, respectively. The value of P_z must be kept null to prevent effects arising from its variation from being superimposed upon those arising from variations in the TEM current.

2.4.1 Remarks on Parameter Estimation

When a quadratic error metric is employed for modelling error, the unconstrained estimation of parameters of a discrete linear model reduces to the computation of the pseudo-inverse of a matrix. In the case of parameter estimation for a continuous-time model, however, practical difficulties arise. The principal difficulty consists in the need to discretise the continuous-time model in order to formulate a numerical parameter estimation problem. Discretisation is always an approximation and, for a linear continuous-time model, two methods are commonly used: the impulse invariance method and the bilinear transform method [10]. In the impulse invariance method, the sampling frequency must be significantly higher than the cut-off frequency of the linear system under study; otherwise, the discrete approximation is a distorted version of the continuous-time system due to spectral aliasing. In the bilinear transform method, a linear system represented by a transfer function $H(s)$ can be approximated by a discrete-time system $H(z)$ through the substitution

$$s = \frac{z-1}{z+1}. \tag{2.15}$$

This approximation maps the $j\omega$ axis in the s-plane onto the unit circle in the z-plane, with the left half-plane mapping to the interior and the right half-plane to the exterior of the unit circle. The approximation (2.15) introduces a nonlinear frequency warping between the continuous-time frequency ω_a and the discrete-time frequency ω_d:

$$\omega_a = \tan\left(\frac{\omega \Delta t}{2}\right), \tag{2.16}$$

where Δt is the sampling interval. This nonlinear relationship can cause the discrete-time system to exhibit a response that differs from its continuous-time counterpart.

In the case of the nonlinear continuous-time model (2.6), additional practical difficulties arise in parameter estimation. There are no general approximations analogous to the bilinear transform (2.15) that permit the mapping from the continuous-time to the discrete-time domain, since the transfer function is inherently a linear concept. As an alternative, the derivatives of the experimental input and output signals of the plant can be estimated and used to construct a parametric estimator, given that (2.6) can be cast as a model that is linear in the parameters and readily estimated by OLS. The use of simple difference approximations for derivatives is not always adequate, since real data contain noise [11]. Polynomial approximations applied to the experimental data can yield less noise-sensitive estimates [11], but not all parameters can always be directly extracted from the resulting parametric procedure, and problem-specific parameter-extraction strategies must be devised [12].

2.4.2 Parameter Estimation Using Evolutionary Computation

Obtaining a satisfactory solution to problem (2.14) using traditional estimation techniques [8, 11] or classical optimisation methods [13, 14] proved to be a complex task and, for several available techniques, impractical. A Genetic Algorithm (GA) [15] was therefore proposed as a simpler and more robust alternative for solving (2.14).

The use of the GA eliminates the risk of the optimisation algorithm becoming trapped at a local minimum. Moreover, solutions that violate the imposed constraints can be eliminated during the natural selection process. The disadvantage of the GA is its computational cost, which precludes real-time use; in the specific context of this application, however, this limitation is not a drawback. In solving (2.14), the GA searches for an optimal solution θ_{opt} by manipulating N_s candidate solutions in a given generation:

$$\mathbf{\Theta}_i = \left[\begin{array}{cccc} \theta_{i,1} & \theta_{i,2} & \cdots & \theta_{i,N_s} \end{array} \right], \tag{2.17}$$

where each solution

$$\theta_{i,j} = \left[\begin{array}{cccccccc} C_x^{i,j} & C_y^{i,j} & C_d^{i,j} & G_{xy}^{i,j} & G_{yd}^{i,j} & G_{da}^{i,j} & \kappa_s^{i,j} & R_{xy}^{i,j} \end{array} \right]^T \tag{2.18}$$

is an individual corresponding to a point in the search space. Analogously to a chromosomal structure, each individual $\theta_{i,j}$ is typically represented in binary form using the alphabet $\{0, 1\}$. Each solution $\theta_{i,j}$ comprises $N_p = 8$ parameters, with each real-valued parameter encoded in $N_b = 8$, 16, 32, or 64 bits, taking the form

$$\theta_{i,j} = \left[\begin{array}{ccccccc} \mathrm{bit}_1^{i,j} & \ldots & \mathrm{bit}_{N_b}^{i,j} & \mathrm{bit}_{N_b+1}^{i,j} & \ldots & \mathrm{bit}_{2N_b}^{i,j} & \ldots & \mathrm{bit}_{N_pN_b}^{i,j} \end{array} \right]^T. \tag{2.19}$$

The classical GA employs three operators: reproduction, crossover, and mutation. The algorithm is initialised with a population $\mathbf{\Theta}_1$ in which each $\mathrm{bit}^{i,j}$ is chosen at random. The NRMSE $J_{MQN}(\theta_{i,j})$ is then computed for each individual $\theta_{i,j}$. The reproduction operator assigns to each individual a reproduction probability $p_{i,j}$ directly proportional to $J_{MQN}(\theta_{i,j})$. A candidate set $\mathbf{\Theta}_1^{c_r}$ for a new population $i = 2$ is selected from $\mathbf{\Theta}_1$ based on the reproduction probability $p_{i,j}$. Fitter individuals, according to the metric $J_{MQN}(\theta_{i,j})$, have a higher probability of reproduction and thus a greater chance of contributing more offspring to the candidate population $\mathbf{\Theta}_1^{c_r}$. After $\mathbf{\Theta}_1^{c_r}$ has been selected by the reproduction operator (first stage of reproduction), the crossover operator generates a candidate

population $\mathbf{\Theta}_1^{c_c}$, in which each individual $\theta_{i,j}^{c_c}$ is produced by crossing two individuals $\theta_{i,j}^{c_r}$ and $\theta_{i',j'}^{c_r}$, the latter being chosen and removed at random from $\mathbf{\Theta}_1^{c_r}$. Depending on the crossover probability p_c, the pair $\theta_{i,j}^{c_r}$ and $\theta_{i',j'}^{c_r}$ may or may not have part of their binary codes exchanged. If crossover is performed, a position between 1 and $N_p N_b$ is selected at random and the individuals are split and recombined to form two new individuals $\breve{\theta}_{i,j}^{c_r}$ and $\breve{\theta}_{i',j'}^{c_r}$. Either the original pair or the crossed pair then enters the candidate population $\mathbf{\Theta}_1^{c_c}$ as $\theta_{i,1}^{c_c}$ and $\theta_{i,2}^{c_c}$. This crossover process is repeated $N_s/2$ times until the candidate population $\mathbf{\Theta}_1^{c_r}$ is exhausted and the candidate population $\mathbf{\Theta}_1^{c_c}$ attains size N_s. Finally, to introduce new information into the evolutionary process, the mutation operator randomly selects, with probability p_m, one bit within $\mathbf{\Theta}_1^{c_c}$ and flips its state. After mutation, the candidate population $\mathbf{\Theta}_1^{c_c}$ becomes the new population $\mathbf{\Theta}_2$. This process constitutes the production of one generation, in which $\mathbf{\Theta}_1$ is transformed into $\mathbf{\Theta}_2$. To obtain the optimal solution θ_{opt}, the transformation $\mathbf{\Theta}_k \rightarrow \mathbf{\Theta}_{k+1}$ continues until either the number of generations reaches a maximum $k = N_g$ or the metric $J_{MQN}(\theta_{i,j})$ attains a minimum value $J_{MQN}^{\min}$. The search properties are governed by the population size, the crossover and mutation probabilities, and the mathematical form of the metric $J_{MQN}(\theta_{i,j})$.

GA routines implemented as MATLAB scripts, developed at North Carolina State University (USA) by Houck, Joines, and Kay, were employed in this work. An experimental current signal I_c, formed by a step function superimposed on a Pseudo Random Binary Signal (PRBS), was used to excite the TEM. Model (2.6) was simulated for a population of $N_s = 50$ individuals per generation using the fourth-order Runge–Kutta method. Problem (2.14) was solved ten times using the GA with the stopping criterion $J_{MQN}(\theta) < 1.0\%$ (typically achieved at $N_g \simeq 200$). Across all ten solutions, the values of C_x and G_{xy} remained virtually unchanged, while the final values of κ_s and R_{xy} varied by less than 5.0%. The remaining parameters exhibited variations greater than 5.0% and, in some cases, exceeding 50.0%. This suggests the existence of multiple solution vectors θ_{opt} for the same data set, with C_x, G_{xy}, κ_s, and R_{xy} invariant across solutions. The mean parameter values obtained are: $C_x = 3.2\ \mathrm{J\,K^{-1}}$, $C_y = 108.0\ \mathrm{J\,K^{-1}}$, $C_d = 3{,}500.0\ \mathrm{J\,K^{-1}}$, $G_{xy} = 0.234\ \mathrm{W\,K^{-1}}$, $G_{yd} = 24.0\ \mathrm{W\,K^{-1}}$, $G_{da} = 10.0\ \mathrm{W\,K^{-1}}$, $\kappa_s = 0.0056\ \mathrm{V\,K^{-1}}$, and $R_{xy} = 1.32\ \Omega$. Figure 2.4 shows the experimentally measured temperature of the upper face of the TEM together with the corresponding temperature computed from model (2.6) using the GA-estimated parameters.

The invariance of C_x, G_{xy}, κ_s, and R_{xy} across the multiple estimated solutions θ_{opt} suggests that these values are consistent with the physical interpretation of the process. On the other hand, the existence of multiple solutions θ_{opt} arising from variations in the remaining parameters indicates that there is scope for model simplification and order reduction, which in turn can render the controller design a less demanding task.

2.5 Block-Oriented Model

In order to improve understanding of model (2.6) and to facilitate the controller design, a block-oriented representation is proposed.

The thermal chamber constructed for this investigation possesses certain characteristics that permit model (2.6) to be decomposed into three distinct sub-models: film/substrate; TEM; and heat sink. This approach enables the proposition of an equivalent electrical

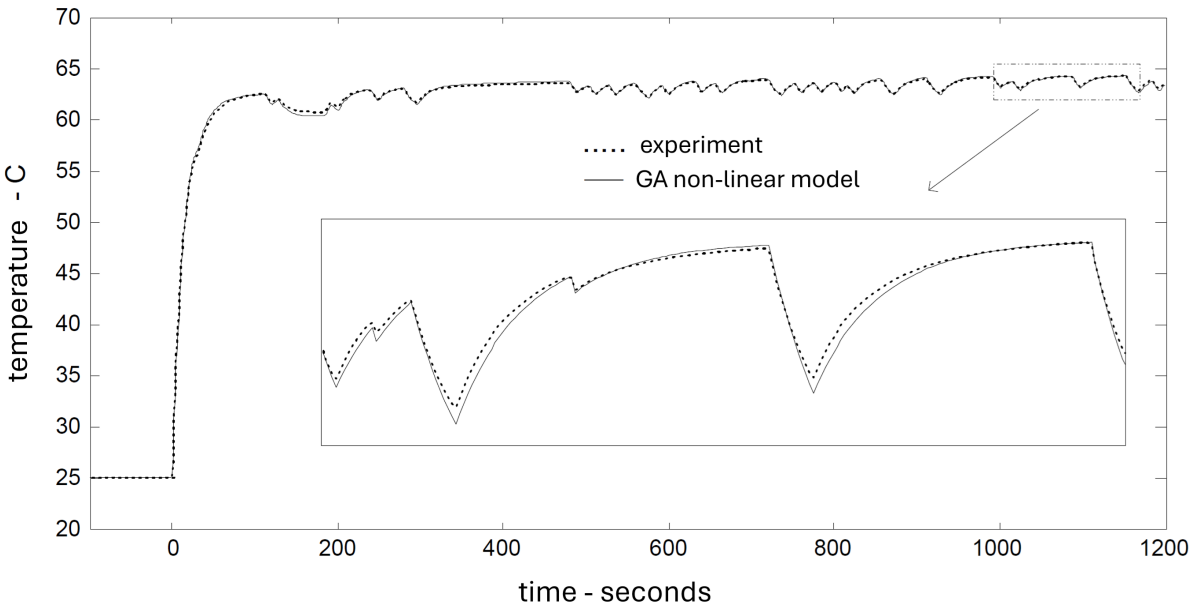

Figure 2.4: Temperature of the upper face of the TEM, obtained experimentally, and the corresponding temperature computed from the continuous nonlinear model of the thermal chamber using parameters estimated by the GA.

model, which facilitates the block decomposition and renders the analysis and understanding of the equivalent circuit more familiar to the electrical engineer.

In this equivalent electrical model, heat flux is represented by an electrical current, temperature by an electrical potential, and — in analogy with Ohm's law and the definition (2.3) — thermal conductance by an electrical conductance. In the same terms as equation (2.2), thermal capacitance can be represented by electrical capacitance, since in electrical terms $i = C\frac{dv}{dt}$, where i and v are the electrical current and potential, respectively.

Taking equations $(2.6)_{1...5}$ and Kirchhoff's laws for electrical circuits into account, the equivalent electrical model for the thermal chamber shown in Figure 2.5 is proposed. The voltage V_{xy} arises internally as a function of the heat flux through the TEM. The dashed lines represent the electrothermal feedback for P_x, which depends on T_x; P_y, which depends on T_y; and P, which depends on the film temperature T_f.

The mass of the upper portion of the TEM is much greater than the combined mass of the film and substrate. Consequently, the heat flux in the film due to P and P_r, represented in equation $(2.6)_1$, produces a negligible variation in the upper-plate temperature T_x. This allows the term $G_{sx}(T_s - T_x)$ in equation $(2.6)_3$ to be neglected, effectively decoupling equations $(2.6)_{1,2}$ from the remaining equations of the model. As a result of these considerations, the dynamics of the controlled temperature T_x can be represented

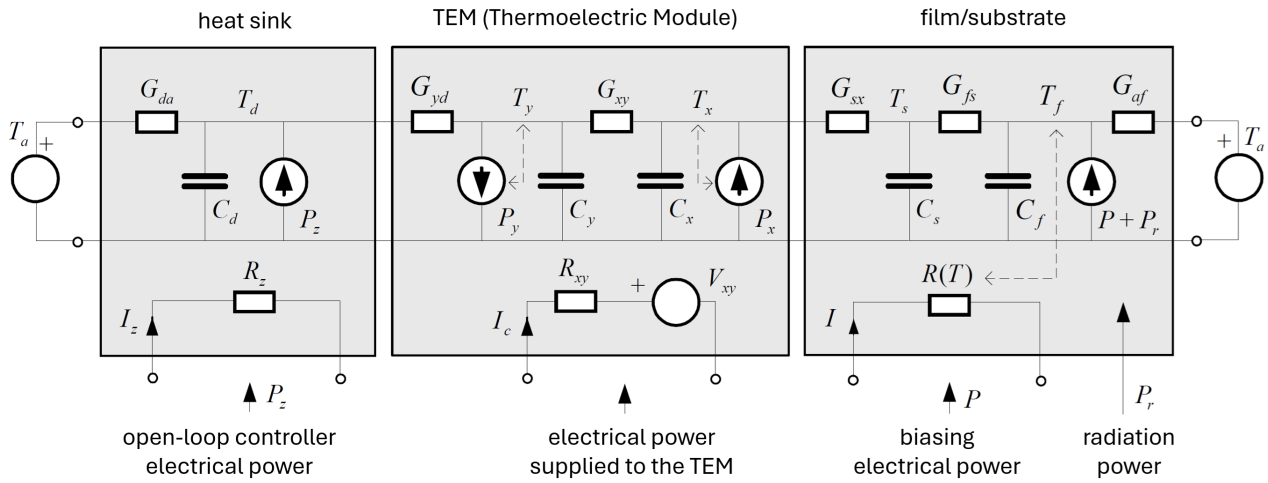

Figure 2.5: Equivalent electrical model of the thermal chamber.

by equations $(2.6)_{3...5}$, rewritten as

$$\begin{aligned}
\dot{T}_x &= \frac{1}{C_x}\left(\frac{I_c^2 R_{xy}}{2} - \kappa_s T_x I_c\right) - \frac{G_{xy}}{C_x}T_x + \frac{G_{xy}}{C_x}T_y \\
\dot{T}_y &= \frac{1}{C_y}\left(\frac{I_c^2 R_{xy}}{2} + \kappa_s T_y I_c\right) + \frac{G_{xy}}{C_y}T_x - \frac{(G_{xy}+G_{yd})}{C_y}T_y + \frac{G_{yd}}{C_y}T_d \\
\dot{T}_d &= \frac{P_z}{C_d} + \frac{G_{yd}}{C_d}T_y - \frac{(G_{yd}+G_{da})}{C_d}T_d + \frac{G_{da}}{C_d}T_a.
\end{aligned} \tag{2.20}$$

The behaviour of the TEM as an isolated module can be represented by equations $(2.20)_{1,2}$ excluding the term $\frac{G_{yd}}{C_y}T_d$. Since the nonlinear components of these equations have no memory, the TEM model can be represented by two cascaded blocks: a static nonlinear block and a linear dynamic block. This model possesses a bilinear feedback involving the current I_c and the states T_x and T_y. The linear block of the TEM model can be written in the compact matrix form of a linear system:

$$\begin{aligned}
\dot{\mathbf{x}} &= \mathbf{A}\mathbf{x} + \mathbf{B}\mathbf{u} \\
\mathbf{y} &= \mathbf{C}\mathbf{x}
\end{aligned} \tag{2.21}$$

with

$$\begin{aligned}
\mathbf{x} &= \begin{bmatrix} T_x & T_y \end{bmatrix}^T \\
\mathbf{A} &= \begin{bmatrix} -\dfrac{G_{xy}}{C_x} & \dfrac{G_{xy}}{C_x} \\ \dfrac{G_{xy}}{C_y} & -\dfrac{(G_{xy}+G_{yd})}{C_y} \end{bmatrix} \\
\mathbf{B} &= \begin{bmatrix} \dfrac{1}{C_x} & 0 \\ 0 & \dfrac{1}{C_y} \end{bmatrix} \\
\mathbf{u} &= \begin{bmatrix} P_x & P_y \end{bmatrix}^T \\
\mathbf{C} &= \begin{bmatrix} 1 & 1 \end{bmatrix}
\end{aligned} \tag{2.22}$$

The equivalent electrical model of the TEM, shown in Figure 2.5, is represented in block-diagram form in Figure 2.6a. The transfer functions $H_x(s)$ and $H_y(s)$ are the direct branches of the model and describe the effect on states T_x and T_y due to excitations at inputs P_x and P_y, respectively. The transfer functions $H_{xy}(s)$ and $H_{yx}(s)$ are the cross branches of the model and describe the coupling between states T_x and T_y resulting from excitations at inputs P_x and P_y, respectively. These transfer functions can be computed straightforwardly using Mason's signal-flow graph formula applied to the equivalent electrical model of Figure 2.5. Alternatively, they can be obtained from the relation

$$H(s) = \mathbf{C}(s\mathbf{I} - \mathbf{A})^{-1}\mathbf{B}. \tag{2.23}$$

In block-oriented models it is customary to exploit the separability property [8] to facilitate parameter estimation. The decomposition into nonlinear and linear blocks can allow the dynamic parameters $\mathbf{A}$ and $\mathbf{B}$ of the linear TEM model to be estimated independently of the static parameters R_{xy} and κ_s. For the model proposed in this investigation, however, a dual electrothermal feedback is present, and the values of P_x and P_y (inputs to the linear subsystem) cannot be computed independently of T_x and T_y.

The equivalent electrical model of the heat sink can be combined with the equivalent TEM model. The electrical circuit representation of these two models, shown in Figure 2.5 and described by equations (2.20), is presented in block-diagram form in Figure 2.6b. The transfer functions $H_{zx}(s)$ and $H_{zy}(s)$ describe the effect on states T_x and T_y, respectively, due to excitation at input P_z. The transfer functions $H_{ax}(s)$ and $H_{ay}(s)$ describe the effect on states T_x and T_y, respectively, resulting from variations in the ambient temperature T_a.

The linear block of the model representing the TEM/heat-sink assembly can also be written in the compact matrix form of a linear system of type (2.21). Using equations (2.20) and excluding the term $\frac{G_{da}}{C_d}T_a$, one obtains

$$\begin{aligned}
\mathbf{x} &= \begin{bmatrix} T_x & T_y & T_d \end{bmatrix}^T \\
\mathbf{A} &= \begin{bmatrix} -\dfrac{G_{xy}}{C_x} & \dfrac{G_{xy}}{C_x} & 0 \\ \dfrac{G_{xy}}{C_y} & -\dfrac{(G_{xy}+G_{yd})}{C_y} & \dfrac{G_{yd}}{C_y} \\ 0 & \dfrac{G_{yd}}{C_d} & -\dfrac{(G_{yd}+G_{da})}{C_d} \end{bmatrix} \\
\mathbf{B} &= \begin{bmatrix} \dfrac{1}{C_x} & 0 & 0 \\ 0 & \dfrac{1}{C_y} & 0 \\ 0 & 0 & \dfrac{1}{C_d} \end{bmatrix} \\
\mathbf{u} &= \begin{bmatrix} P_x & P_y & P_z \end{bmatrix}^T \\
\mathbf{C} &= \begin{bmatrix} 1 & 0 & 0 \end{bmatrix}
\end{aligned} \tag{2.24}$$

For the block-oriented model of Figure 2.6b, whose linear block is given by (2.24), the separability property can be exploited by holding I_c constant in the computation of P_x and

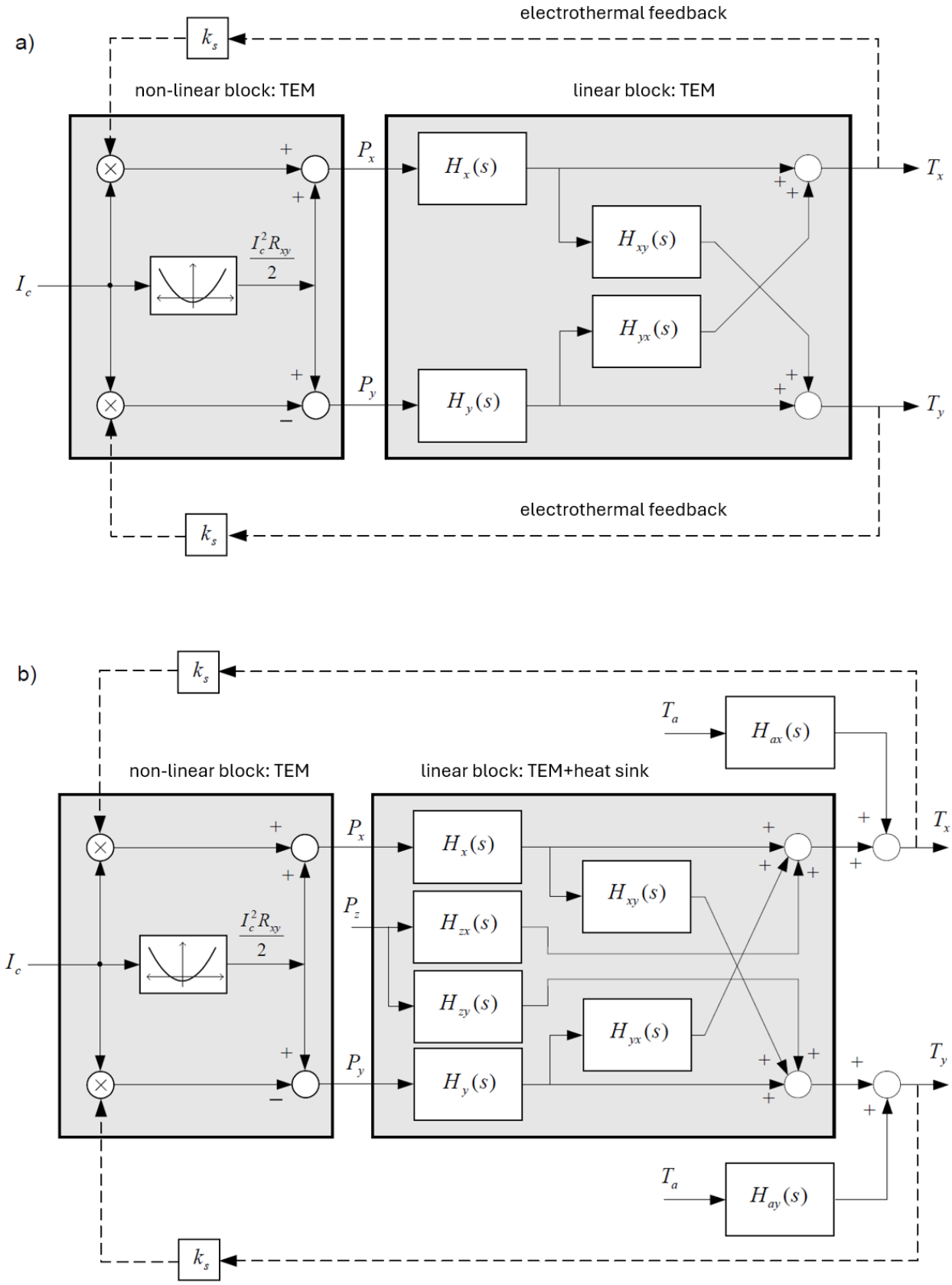

Figure 2.6: a) Block-oriented TEM model; b) Block-oriented model of the TEM/heat-sink assembly.

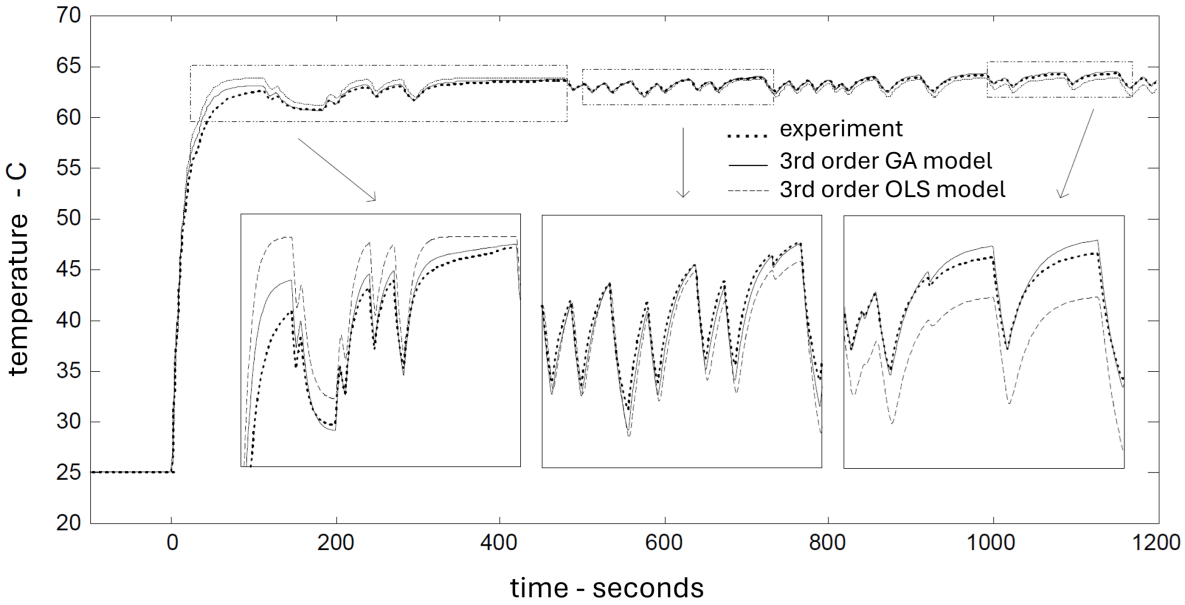

Figure 2.7: Temperature of the upper face of the TEM, obtained experimentally, and the corresponding temperatures computed from the following TEM/heat-sink assembly models: continuous-time linear 3rd-order model using GA-estimated parameters, and discrete-time linear 3rd-order model using OLS-estimated parameters.

P_y. In practice, however, the use of a constant current precludes parameter estimation. To circumvent this limitation, a current waveform composed of a step function superimposed on a low-amplitude PRBS was employed. Proceeding in this manner and computing the experimental derivatives $\dot{T}_x$, $\dot{T}_y$, and $\dot{T}_d$ for $P_z = 0$, the parameter vector θ was estimated by OLS, yielding $J_{MQN}(\theta) \sim 10\%$. Alternatively, without computing the experimental derivatives, θ was estimated by the GA, yielding $J_{MQN}(\theta) \sim 3\%$. These results are presented in Figure 2.7. The parameters θ obtained by direct estimation on the nonlinear model (Section 2.4), yielding $J_{MQN}(\theta) \sim 1\%$, were ultimately adopted.

2.6 Model Order Reduction for the TEM/Heat-Sink Assembly

For the design of the controller employed in this investigation, the dominant modes of the linear model (2.24) were analysed. This enabled model order reduction through retention of the dominant modes, resulting in a consequent simplification of the controller design.

While the dominant modes can be analysed from the positions of the poles in the s-plane, this criterion is not precise; it is therefore common practice to employ Modal Dominance Indices (MDI) [11].

A transfer function of the form

$$H(s) = \frac{b_0 + b_1 s + \ldots + b_r s^r}{(s+\lambda_1)\ldots(s+\lambda_i)\ldots(s+\lambda_n)}, \tag{2.25}$$

with $n > r$, $\lambda_i \neq \lambda_j$ for $i \neq j$, and $(\lambda_i > 0) \in \Re$, can be written in partial fraction form

as

$$H(s) = \frac{J_1}{(s+\lambda_1)} + \ldots + \frac{J_i}{(s+\lambda_i)} + \ldots + \frac{J_n}{(s+\lambda_n)}, \tag{2.26}$$

where J_i is the i-th residue corresponding to the pole λ_i. For the transfer function (2.25), the i-th MDI is defined as

$$\gamma_i \triangleq \frac{J_i}{\lambda_i}. \tag{2.27}$$

Considering model (2.24) for the TEM/heat-sink assembly and the parameter values presented in Section 2.4, the following transfer function is obtained:

$$\frac{T_x(s)}{P_x(s)} = 0.31 \times \frac{s^2 + 0.23s + 6.56 \times 10^{-4}}{s^3 + 0.3s^2 + 1.76 \times 10^{-2}s + 4.64 \times 10^{-5}}, \tag{2.28}$$

which can be expanded in partial fractions as in (2.26):

$$\frac{T_x(s)}{P_x(s)} = \frac{1.9 \times 10^{-3}}{s + 0.23} + \frac{0.31}{s + 7.2 \times 10^{-2}} + \frac{3.0 \times 10^{-4}}{s + 2.7 \times 10^{-3}}, \tag{2.29}$$

yielding $\gamma_1 = 8.2 \times 10^{-3}$, $\gamma_2 = 4.3$, and $\gamma_3 = 0.11$, reading from left to right in (2.28). The pole corresponding to λ_2 is dominant relative to those corresponding to λ_1 and λ_3 ($\gamma_2 \gg \gamma_3$ and $\gamma_2 \gg \gamma_1$), suggesting that a first-order equivalent model suffices to represent model (2.24). To obtain a reduced model, Padé's approximation method [11] could be applied. Nevertheless, it was decided to reduce the model order through physical reasoning, as a means of confirming the modal dominance result.

Taking the constraints defined in optimisation problem (2.14) into account, model (2.20) is rewritten as

$$\begin{aligned} C_x \frac{dT_x}{dt} &= P_x - G_{xd}(T_x - T_d) \\ C_d \frac{dT_d}{dt} &= P_z + P_y + G_{xd}(T_x - T_d) - G_{da}(T_d - T_a), \end{aligned} \tag{2.30}$$

where G_{xd} is the thermal conductance between the upper plate of the TEM and the heat sink. Since $G_{yd} \gg G_{xy}$, it follows that $G_{xd} \simeq G_{xy}$. Casting (2.30) in the linear form (2.21) yields

$$\begin{aligned} \mathbf{x} &= \begin{bmatrix} T_x & T_d \end{bmatrix}^T \\ \mathbf{A} &= \begin{bmatrix} -\dfrac{G_{xy}}{C_x} & \dfrac{G_{xy}}{C_x} \\ \dfrac{G_{xy}}{C_d} & -\dfrac{(G_{xy} + G_{da})}{C_d} \end{bmatrix} \\ \mathbf{B} &= \begin{bmatrix} \dfrac{1}{C_x} & 0 \\ 0 & \dfrac{1}{C_d} \end{bmatrix} \\ \mathbf{u} &= \begin{bmatrix} P_x & P_z + P_y \end{bmatrix}^T \\ \mathbf{C} &= \begin{bmatrix} 1 & 0 \end{bmatrix} \end{aligned} \tag{2.31}$$

The transfer function for model (2.21) with (2.31) can be obtained via (2.23), giving

$$\frac{T_x(s)}{P_x(s)} = \frac{1}{C_x} \frac{(s + \dfrac{G_{xy} + G_{da}}{C_d})}{s^2 + s\dfrac{(C_x\,(G_{xy} + G_{da}) + C_d G_{xy})}{C_x C_d} + \dfrac{G_{xy} G_{da}}{C_x C_d}}. \tag{2.32}$$

Substituting the physically estimated parameter values into (2.32) and computing the MDIs yields

$$\frac{T_x(s)}{P_x(s)} = \frac{0.31}{s + 7.3 \times 10^{-2}} + \frac{3.0 \times 10^{-4}}{s + 2.9 \times 10^{-3}} \tag{2.33}$$

with MDIs $\gamma_1 = 4.3$ and $\gamma_2 = 0.1$, reading from left to right in (2.33). Since $\gamma_1 \gg \gamma_2$, the pole corresponding to λ_1 is dominant over that corresponding to λ_2.

Performing the same analysis through physical reasoning and noting that $C_d G_{xy} \gg C_x(G_{xy} + G_{da})$, the transfer function (2.32) simplifies to

$$\frac{T_x(s)}{P_x(s)} = \frac{1}{C_x} \frac{(s + z_1)}{(s + p_1)(s + p_2)}, \tag{2.34}$$

where

$$z_1 = \frac{G_{xy} + G_{da}}{C_d}, \tag{2.35}$$

$$p_1 = \frac{G_{xy}}{2C_x}\left(1 - \sqrt{\left(1 - \frac{4G_{da}C_x}{C_d G_{xy}}\right)}\right), \tag{2.36}$$

$$p_2 = \frac{G_{xy}}{2C_x}\left(1 + \sqrt{\left(1 - \frac{4G_{da}C_x}{C_d G_{xy}}\right)}\right). \tag{2.37}$$

Considering that $C_d G_{xy} \gg 4G_{da}C_x$ and $C_d \gg G_{xy} + G_{da}$, it follows that $z_1 \to 0$, $p_1 \to 0$, and $p_2 \to -\dfrac{G_{xy}}{C_x}$, confirming that a first-order model

$$H_x(s) = \frac{T_x(s)}{P_x(s)} = \frac{1}{C_x} \frac{1}{(s + \dfrac{G_{xy}}{C_x})} = \frac{0.31}{s + 7.3 \times 10^{-2}} \tag{2.38}$$

provides a valid approximation to the linear model (2.24) and, consequently, to the non-linear model (2.20). The pole p_2 represents the time constant $\tau_x = 13.7$ s associated with the response of the upper plate of the TEM to a current excitation. Figure 2.8 shows the experimental response of the upper-plate temperature T_x to a current step of $I_c = 0.1$ A and the corresponding result obtained from (2.38).

2.7 Controller Design

The model equations (2.20) contain state-input products in the terms $-\kappa_s T_x I_c$ and $+\kappa_s T_y I_c$, implying bilinear plant dynamics (Figure 2.6b). The presence of bilinear dynamics complicates the temperature controller design. A simplification of model (2.20) is therefore proposed, with the aim of enabling a straightforward yet accurate controller design.

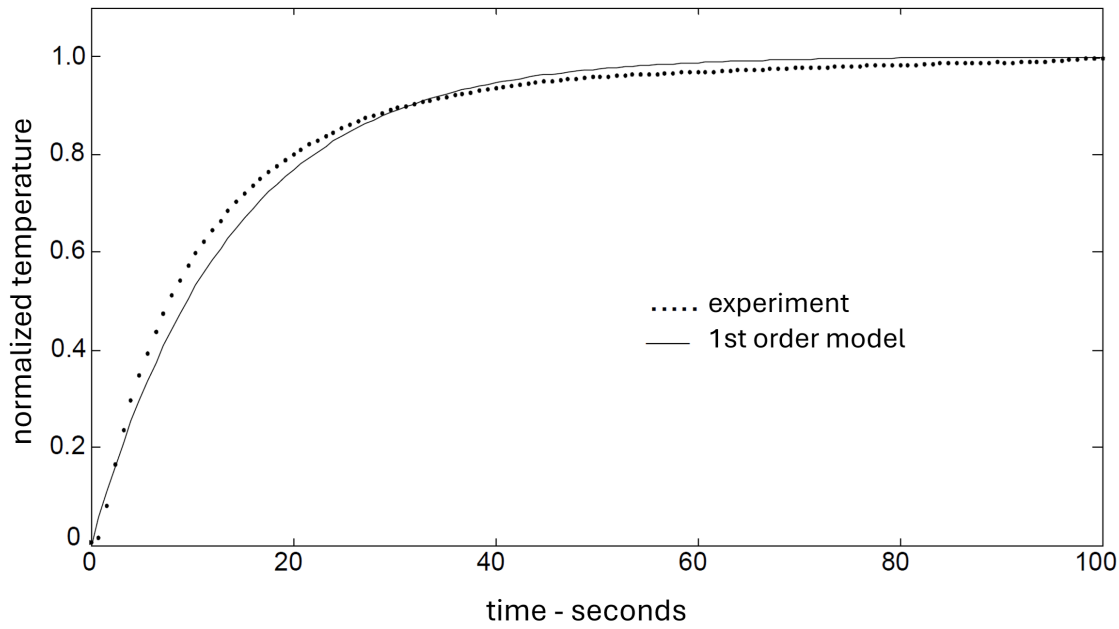

Figure 2.8: Temperature of the upper face of the TEM, obtained experimentally in response to a current step of 0.1 A, and the corresponding temperature computed from the continuous-time first-order linear model using OLS-estimated parameters.

The active heat powers P_x and P_y depend on both the plate temperatures of the TEM and the control current I_c, which precludes expressing the input-output relationship between I_c and T_x in terms of a linear system. To cast model (2.20) in linear form, it is therefore necessary to assess the feasibility of decoupling the current I_c from the state variables T_x and T_y.

For VO_2 film characterisation, the operating temperature T_0 varies between 20 and 80 °C (290 to 350 K), while the control current I_c can vary between -3.0 and $+3.0$ A. In percentage terms, the operating temperature varies $\pm 10\%$ around 320 K. It is therefore proposed to make P_x and P_y independent of temperature by fixing T_x and T_y at the mean value 320 K within the range of interest, yielding

$$\begin{aligned} P_x &= I_c^2 \frac{R_{xy}}{2} + 320\kappa_s I_c \\ P_y &= I_c^2 \frac{R_{xy}}{2} - 320\kappa_s I_c. \end{aligned} \tag{2.39}$$

With the active powers (2.39) decoupled from temperature, the separability property is maintained and model (2.20) can be represented by a linear system with proportional gains $\mathbf{k}_p = \begin{bmatrix} k_{px} & k_{py} \end{bmatrix}^T$ on inputs P_x and P_y, obtained as

$$\begin{aligned} k_{px} &= \frac{\partial P_x}{\partial I_c} = I_c R_{xy} + 320\kappa_s \\ k_{py} &= \frac{\partial P_y}{\partial I_c} = I_c R_{xy} - 320\kappa_s. \end{aligned} \tag{2.40}$$

In the thermal chamber implementation, a heat sink of mass much greater than that of the TEM was employed to achieve dynamic decoupling between states T_x and T_y. This

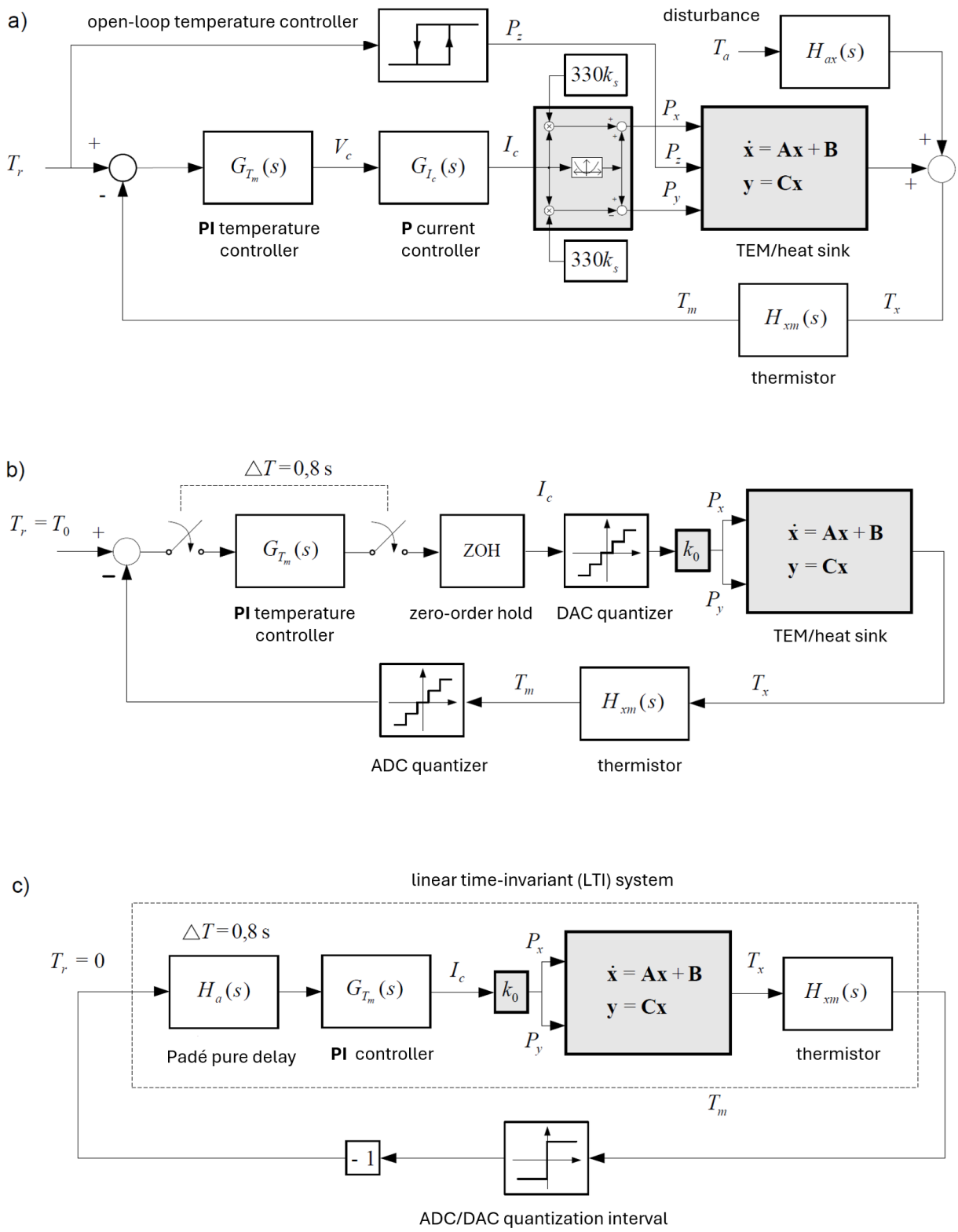

Figure 2.9: a) Temperature controller of the thermal chamber; b) Sampled-data equivalent system of the temperature controller including quantisation nonlinearities; c) Temperature controller at the operating point represented as a relay feedback system.

is equivalent to neglecting the cross branches $H_{xy}(s)$ and $H_{yx}(s)$ in the block-oriented model (Figure 2.6), allowing only the dynamic function $H_x(s)$ to be used in the controller design.

The controlled temperature T_x is measured via T_m, obtained from a temperature sensor mounted on the upper plate of the TEM. This sensor has a finite response time, with dynamics governed by $(2.6)_6$ and the measurement transfer function

$$H_{xm}(s) = \frac{\omega_m}{s + \omega_m}, \tag{2.41}$$

where ω_m is the cut-off frequency of the temperature sensor.

The solution of equation $(2.6)_6$ is given by

$$T_m(t) = T_{x0}\left(1 - e^{-t/\tau_m}\right), \tag{2.42}$$

where T_{x0} is the initial film temperature and $\tau_m = \frac{G_{xm}}{C_m}$ is the time constant of the temperature measurement sensor. Two types of sensor were used: an LM35 integrated circuit with $\tau_m \simeq 16$ s and a miniature thermistor with $\tau_m \simeq 1$ s. For relatively slow rates of change $\frac{\Delta T_x}{\Delta t}$, T_x can be approximated by T_m. In certain special cases in this investigation, the rate $\frac{\Delta T_x}{\Delta t}$ was relatively high, requiring the application of hysteresis-curve correction techniques, as described in [16].

A series feedback controller $G_{T_m}(s)$, shown in Figure 2.9a, is therefore proposed to control the temperature T_x of the upper face of the TEM from the measurement T_m. This controller was implemented in digital (sampled-data) form, based on IEEE-488 instruments and an algorithm developed in the C programming language under the MS-DOS operating system running on an IBM-PC compatible computer. The control algorithm and data acquisition routine are implemented within this program. The acquisition routine reads the resistance values of the thermistor and the vanadium dioxide film every 0.8 seconds. The computed temperature T_m, derived from the thermistor resistance R_t using equation (2.8), is fed back into the control algorithm loop. This algorithm performs the necessary calculations using a reference temperature T_r loaded from a file and updates the output voltage V_c. This voltage is subsequently converted into the current I_c for TEM excitation. While the temperature is varied according to some generic mathematical function $T_r = f(T)$ or a data file, the measured resistance R of VO_2 is stored in the computer for subsequent analysis.

2.7.1 Current Controller

The control action of $G_{T_m}(s)$, expressed as the voltage V_c, could in principle be used to directly excite the TEM. However, in the proposed model, the TEM excitation is expressed as the current I_c. This requires the use of a current controller $G_{I_c}(s)$ in cascade with the temperature controller $G_{T_m}(s)$. Since the time constant of the electrical dynamics in the TEM is much smaller than the minimum achievable digital processing period, it was necessary to implement $G_{I_c}(s)$ using analogue components. As shown in Figure 2.10, the current controller $G_{I_c}(s)$ was implemented using a general-purpose operational amplifier and a class-AB power amplifier, specially designed for this application. The open-loop transfer function of an internally compensated operational amplifier is given by

$$G_{V_m}(s) = \frac{2\pi f_c}{s + 2\pi f_c}, \tag{2.43}$$

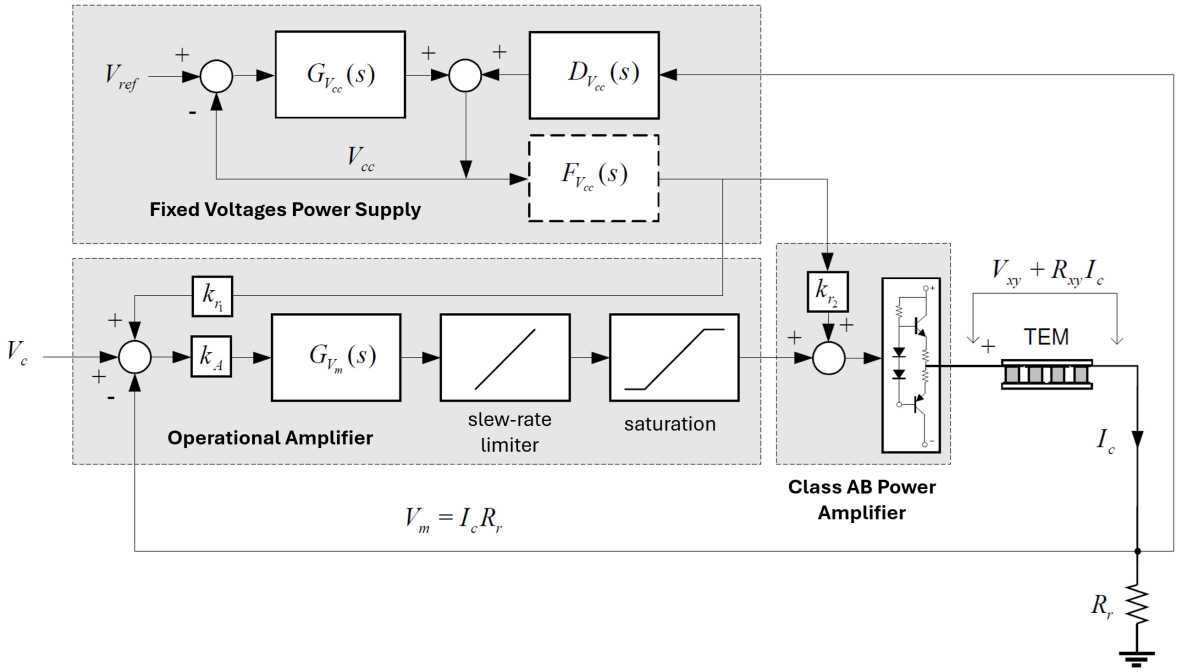

Figure 2.10: Current controller and its interaction with the power supply.

where f_c is the cut-off frequency, typically in the range 10–100 Hz, and the open-loop gain k_A is large, of the order of 10^5. The operational amplifier is not immune to supply voltage V_{cc} variations, being affected additively through the gain k_{r1}. Furthermore, the operational amplifier exhibits two notable nonlinearities: output voltage slew-rate limiting and saturation. The power amplifier is likewise not immune to V_{cc} variations and is affected additively through the gain k_{r2}. The analogue controller is powered by a dedicated power supply, incorporating a voltage controller $G_{V_{cc}}(s)$ whose objective is to maintain V_{cc} constant from a reference voltage V_{ref}, even in the presence of input voltage and load disturbances. The effect of a variation in the load current I_c on the voltage V_{cc} is represented by the transfer function $D_{V_{cc}}(s)$. These feedback paths create the possibility of instability in V_{cc}, which indeed occurred during this investigation and was resolved during the controller/power-supply design phase. The most noteworthy instability, whose cause was not immediately apparent, arose from the interaction between the supply voltage controller $G_{V_{cc}}(s)$ and the power amplifier; this oscillation was synchronised with the signal I_c. To overcome this instability, a filter $F_{V_{cc}}(s)$ was incorporated at the power supply output, which prevented the recurrence of this condition.

Thus, initially assuming $H_{xm}(s) = 1$, with the current controller stabilised and V_c converted to I_c, the closed-loop transfer function of the temperature controller is obtained as

$$M_f(s) = \frac{T_x(s)}{T_r(s)} = \frac{G_{T_m}(s)H_x(s)}{1 + G_{T_m}(s)H_x(s)} \tag{2.44}$$

where T_r is the reference temperature.

2.7.2 Proportional-Integral Controller

In this investigation, the reference temperature waveform $T_r(t)$ is restricted to triangular or sinusoidal shapes with period $\tau_r = \frac{2\pi}{\omega_r}$, where ω_r is the fundamental frequency. The control objective is that the output signal $T_x(j\omega)$ should be an approximate replica of the reference signal $T_r(j\omega)$. The controller was therefore designed initially in the frequency domain to define its structure and tuning parameters. Since $T_x(s) = T_r(s)M_f(s)$, a controller is required that makes the modulus of $M_f(j\omega)$ equal to unity over a bandwidth approximately equal to that of the spectrum of $T_r(j\omega)$. Additionally, the group delay of $M_f(j\omega)$ must be approximately constant within the frequency range of interest to avoid waveform distortion of the signal $T_x(t)$.

The closed-loop transfer function $M_f(s)$ is proposed as a first-order low-pass filter with cut-off frequency ω_c greater than ω_r:

$$M_f(s) = \frac{\omega_c}{s + \omega_c}. \tag{2.45}$$

Substituting (2.38) into (2.44) and equating the result to (2.45), the controller transfer function is obtained as

$$G_{T_m}(s) = \omega_c C_x + \frac{\omega_c G_{xy}}{s}, \tag{2.46}$$

which is equivalent to a PI controller

$$G_{T_m}(s) = K_P + \frac{K_I}{s}, \tag{2.47}$$

with proportional gain $K_P = \omega_c C_x$ and integral gain $K_I = \omega_c G_{xy}$. For the TEM used in this investigation, $K_P = 3.2\omega_c$ and $K_I = 0.234\omega_c$. The sole design parameter of the series PI controller $G_{T_m}(s)$ is therefore the closed-loop bandwidth ω_c.

2.7.3 Control Error Analysis

Incorporating (2.41) into the control loop, the closed-loop response of the controller takes the form

$$M_f(s) = \frac{G_{T_m}(s)H_x(s)}{1 + G_{T_m}(s)H_x(s)H_{xm}(s)} \tag{2.48}$$

which yields

$$M_f(s) = \frac{(s + \omega_m)\,\omega_c}{s^2 + s\omega_m + \omega_c\omega_m} \tag{2.49}$$

whose impulse response is

$$m_f(t) = \frac{\omega_c}{\sqrt{\omega_m\omega_c}}\sqrt{\frac{\omega_m^2 + \omega_m\omega_c - 1}{1 - \frac{\omega_m^2}{4\omega_m\omega_c}}}\exp\left(-\frac{\omega_m}{2}t\right)\sin\left(\sqrt{\omega_m\omega_c - \frac{\omega_m^2}{4}}\,t + \theta\right) \tag{2.50}$$

where θ is not relevant to the present analysis.

Considering that, for the TEM model and the waveforms employed in this investigation, $\omega_c \gg \omega_m$, $\omega_c \gg 1$, and $\omega_m > 1$, equation (2.50) can be simplified to

$$m_f(t) = \omega_c \exp\left(-\frac{\omega_m}{2}t\right)\sin(\sqrt{\omega_m\omega_c}\,t + \theta) \tag{2.51}$$

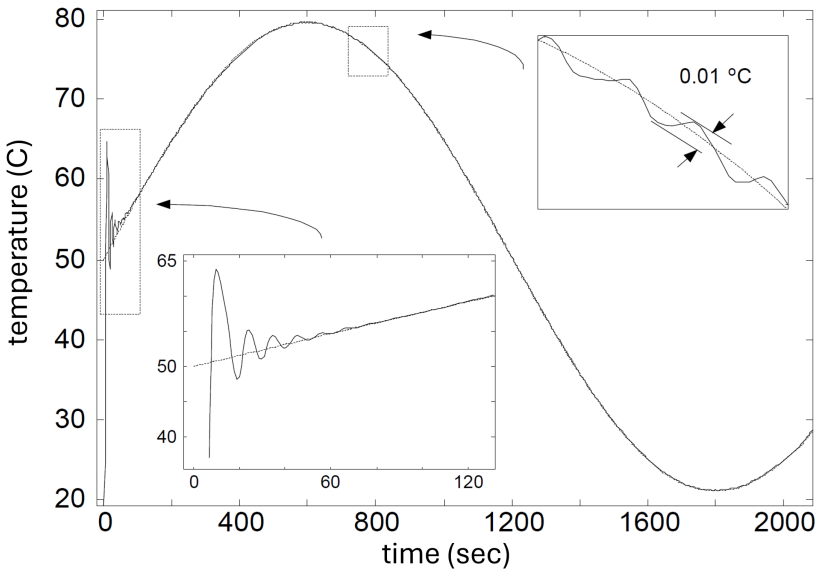

Figure 2.11: Controller response to a sinusoidal excitation. At the onset of excitation there is a temperature step, which causes a transient overshoot in the film temperature relative to the reference. This can be observed in the left inset of the figure. The right inset presents the film temperature response after the initial transient has settled. The steady-state error obtained in this case was less than 0.01 °C.

indicating that the initial amplitude of the transient is directly proportional to ω_c and its duration is inversely proportional to ω_m. This means that the higher the reference signal frequency, the larger ω_c must be and the greater the initial transient amplitude will be. Moreover, the slower the temperature sensor response, the smaller ω_m must be, leading to a slower decay of the initial transient amplitude. This behaviour was verified during experimental tests with the platform for controller tuning. This analysis motivated the replacement of the previously used temperature sensor — an LM35 integrated circuit with a response time of 16 seconds — by a micro-thermistor with a response time of 1 second when immersed in thermal compound. This substitution allowed a significant reduction in the error described by equation (2.51), since the transient attenuation factor was increased.

Figure 2.11 presents a sinusoidal waveform used as reference for the controller together with the corresponding VO_2 film temperature. The oscillatory portion of the initial transient, described by equation (2.50), is attributed to the response of (2.49) to the impulsive component of the current step to which the thermoelectric module is subjected. This step is necessary to raise the film temperature from its initial value of 30 °C (room temperature) to 50 °C, which is the initial value of the reference sinusoidal waveform.

After the initial transient, the film temperature should track the reference temperature with zero or approximately constant error, since $\lim_{t\to\infty} m_f(t) = 0$. In practice, however, this prediction was not confirmed. Experimentally, an oscillation of amplitude less than 0.05 °C was observed. The amplitude of this oscillation depends on the tuning of the gains K_I and K_P of the controller $G_{T_m}(s)$ and also on the operating temperature: the higher the temperature, the larger the oscillation amplitude. The period of this oscillation, measured experimentally, depends on the gains K_I and K_P.

The occurrence of the oscillatory signal superimposed on the measured temperature T_m is due to the emergence of a Relay Feedback System (RFS) [17]. Assuming that there is an equilibrium between the reference temperature T_r and the measured temperature T_m, and for simplicity combining the quantisers of the Digital-to-Analogue Converter (DAC) and the Analogue-to-Digital Converter (ADC) into a single relay (see Figure 2.9c), the quantised value of T_m is given by

$$T_m^q = \text{sign } T_m = \begin{cases} +1, & \text{if } T_m \geq 0 \\ -1, & \text{if } T_m < 0 \end{cases} . \tag{2.52}$$

The subtraction signal in the negative feedback loop is equivalent to applying a gain of -1 to T_m^q. The RFS can therefore be represented as

$$\begin{aligned} \dot{\mathbf{x}} &= \mathbf{A}\mathbf{x} + \mathbf{B}u \\ y &= \mathbf{C}\mathbf{x} \\ u &= -\text{sign } y. \end{aligned} \tag{2.53}$$

The sampling period introduces a pure delay $H_a(s) = \exp(-0.8s)$, which can be approximated by a second-order Padé expansion as

$$H_a(s) \simeq \frac{s^2 - 7.5s + 18.75}{s^2 + 7.5s + 18.75}. \tag{2.54}$$

The delay $H_a(s)$ in cascade with the controller $G_{T_m}(s)$, with $H_x(s)$ and with $H_{xm}(s)$, results in a linear time-invariant system whose transfer function

$$\mathbf{C}(s\mathbf{I} - \mathbf{A})^{-1}\mathbf{B} = k_p H_a(s) G_{T_m}(s) H_x(s) H_{xm}(s) \tag{2.55}$$

exhibits a typical Bode diagram shown in Figure 2.12. The gain margin of 11 dB and phase margin of 110 ° indicate that the closed-loop system is relatively stable at the operating point. Sustained oscillation requires that the open-loop phase shift reach 180 ° and that the open-loop gain exceed unity at the frequency at which this phase shift occurs, a condition that arises solely due to the presence of the quantiser. The frequency at which the open-loop phase shift reaches 180 ° is 2 rad/s, slightly higher than the result obtained by measuring the period of the low-amplitude oscillation observed experimentally.

2.7.4 Open-Loop Controller

As the temperature T_x increases, considering a constant heat sink temperature $T_d = 30\,°\text{C}$, a larger heat flux P_x proportional to the temperature difference $T_x - T_d$ is required. To achieve this larger P_x, the current I_c must increase, as shown in Figure 2.3. However, the TEM gain k_{px} increases linearly with I_c, thereby altering the amplitude of the RFS oscillation and causing the temperature error to exceed the thermal chamber specification. To mitigate this increase in error, an open-loop controller for the heat-sink temperature T_d is proposed, with the objective of reducing $T_x - T_d$ through control action on P_z. This controller is defined as a relay with hysteresis:

$$P_z(t) = \begin{cases} 0, & \text{if } T_r(t) \leq T_{\text{off}} \\ 1, & \text{if } T_r(t) \geq T_{\text{on}} \end{cases} \tag{2.56}$$

where $T_{\text{on}} = 50\,°\text{C}$ and $T_{\text{off}} = 48\,°\text{C}$ are the temperatures at which P_z should be activated and deactivated, respectively. The controller (2.56) allows the current I_c to be maintained below certain limits and, consequently, the amplitude of the oscillation to be reduced to acceptable values.

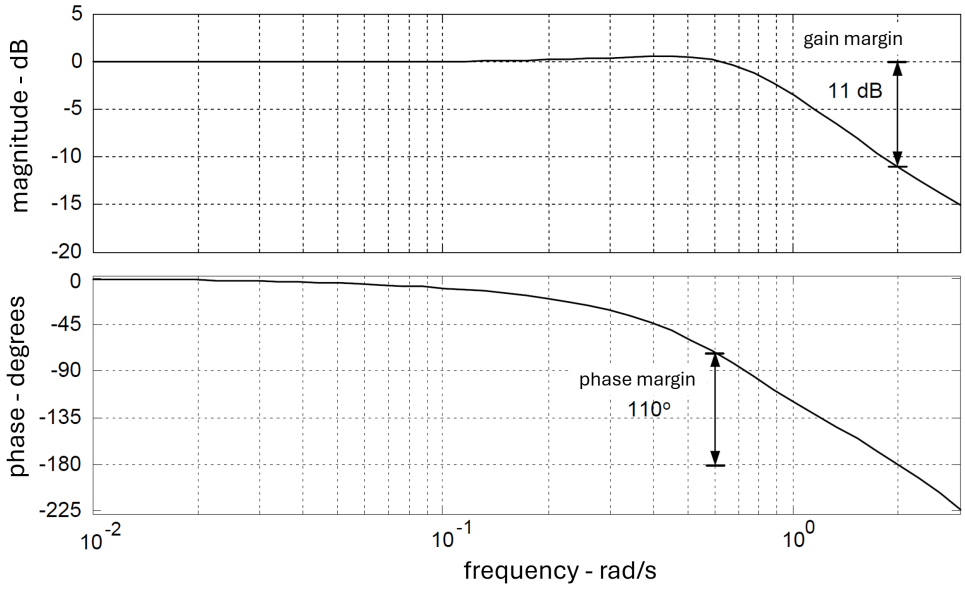

Figure 2.12: Bode diagram of the linear system of the RFS.

2.8 Conclusions

This chapter presented a description of the experimental platform employed in this investigation. A nonlinear model was proposed for the thermal dynamics of the film/substrate assembly and the TEM/heat-sink assembly. A simplified model of the TEM/heat-sink assembly was derived and used to design a proportional-integral temperature controller for the thermal chamber. The sources of control error were analysed, leading to the proposal and implementation of an auxiliary open-loop controller to reduce the steady-state control error. The implemented controller enables thermal cycling of the film with an error within the desired specifications for the thermal chamber.

Bibliography

[1] Choi, H., Ahm, J., Jung, J., Noh, T. & Kim, D. Mid-infrared properties of a VO_2 film near the metal-insulator transition. *Physical Review B* **54**, 4621–4628 (1996).

[2] Almeida, L. A. L., Deep, G. S. & Lima, A. M. N. A novel Preisach operator for modeling of hysteresis in VO_2 microbolometer. In *Proceedings of the 19th IEEE Instrumentation and Measurement Technology Conference*, 281–286 (2002).

[3] Almeida, L. A. L., Deep, G. S., Lima, A. M. N. & Neff, H. Thermodynamics of thin VO_2 films within the hysteretic transition: Evidence for chaos near the percolation threshold. *Applied Physics Letter* **77**, 4365–4367 (2000).

[4] Meijer, G. & Herwaarden, A. *Thermal Sensors* (IOP Publishing, 1994).

[5] Rowe, D. M. CRC *Handbook of Thermoelectrics* (CRC Press, 1995).

[6] Huang, B. J. & Duang, C. L. System dynamic model and temperature control of a thermoelectric cooler. *International Journal of Refrigeration* 197–207 (2000).

[7] Chávez, J. A., Ortega, J. A., Salazar, J., Turó, A. & García, M. J. Spice model of thermoelectric elements including thermal effects. In *Proceedings of the 17th IEEE Instrumentation and Measurement Technology Conference - IMTC* (2000).

[8] Norton, J. P. *An Introduction to Identification* (Academic Press, 1986).

[9] Nelder, J. Simplex method for function minimization. *Engineering Technology and Applied Sciences* 12–12 (1979).

[10] Ifeachor, E. C. & Jervis, B. W. *Digital Signal Processing: A Practical Approach* (Addison-Wesley, 1993).

[11] Aguirre, L. A. *Introdução À Identificação de Sistemas: Técnicas Lineares e Não-Lineares Aplicadas a Sistemas Reais* (Editora UFMG, 2000).

[12] de Oliveira, P. J. R. *Estimação de Parâmetros Do Motor de Indução Utilizando Um Modelo Contínuo No Tempo.* Master's thesis, Programa de Pós-Graduação em Engenharia Elétrica - Escola de Engenharia da UFMG (1998).

[13] Gill, P. E., Murray, W. & Wright, M. H. *Practical Optimization* (Academic Press, 1981).

[14] Luenberger, D. G. *Linear and Nonlinear Programming* (Addison-Wesley, 1989).

[15] Goldberg, D. E. *Genetic Algorithm in Search, Optimization and Machine Learning* (Addison-Wesley, 1989).

[16] Almeida, L. A. L., Deep, G. S. & Lima, A. M. N. Nonlinear inverse filtering for measurement of thermal hysteresis. In *Proceedings of the 19th IEEE Instrumentation and Measurement Technology Conference (IMTC 2002)*, vol. 2, 1419–1423 (2002).

[17] Gonçalves, J. M., Megretski, A. & Dahleh, M. A. Global stability of relay feedback systems. *IEEE Transactions on Automatic Control* **46**, 550–562 (2001).