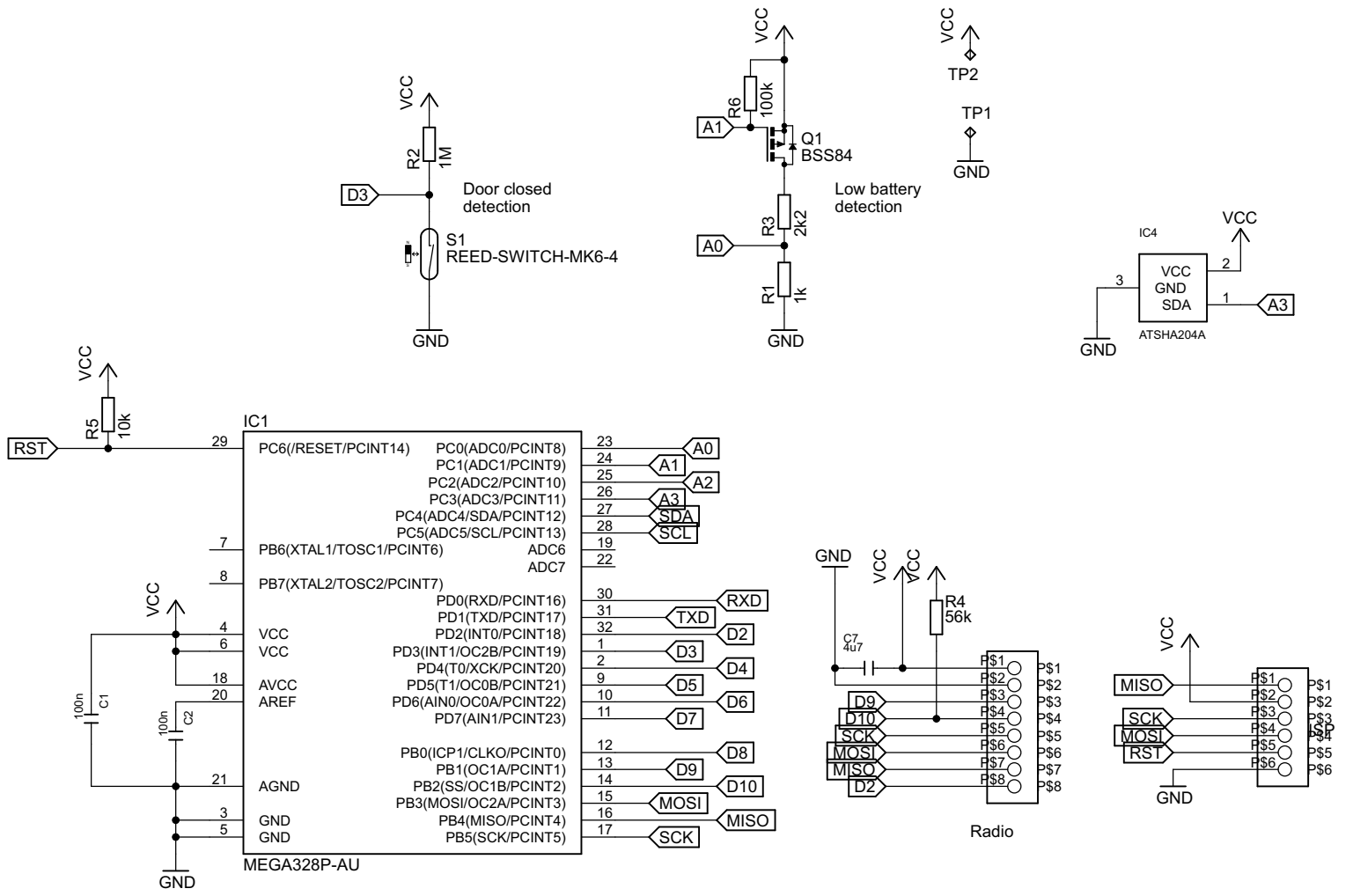

TITLE: MyDoorSensor	
Document Number:	REV:
Date: 3/2/2016 4:40:07 PM	Sheet: 1/1