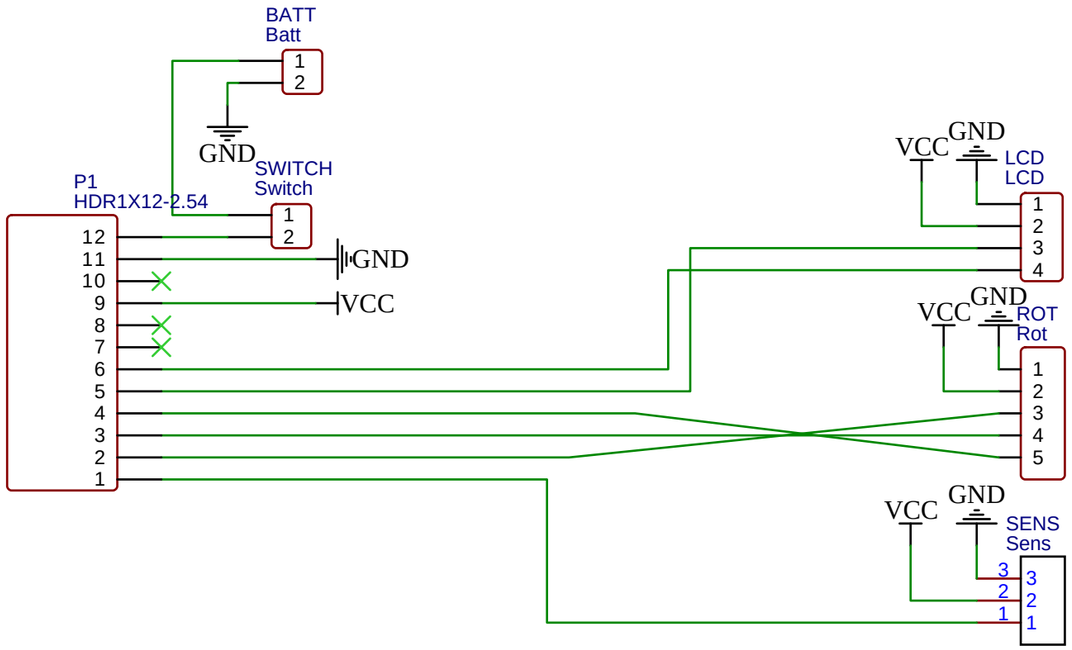

TITLE: Wankler Interface Board		REV: 1.0
EasyEDA	Company: Wolf Design	Sheet: 1/1
	Date: 2020-06-14 Drawn By: senfkorn	