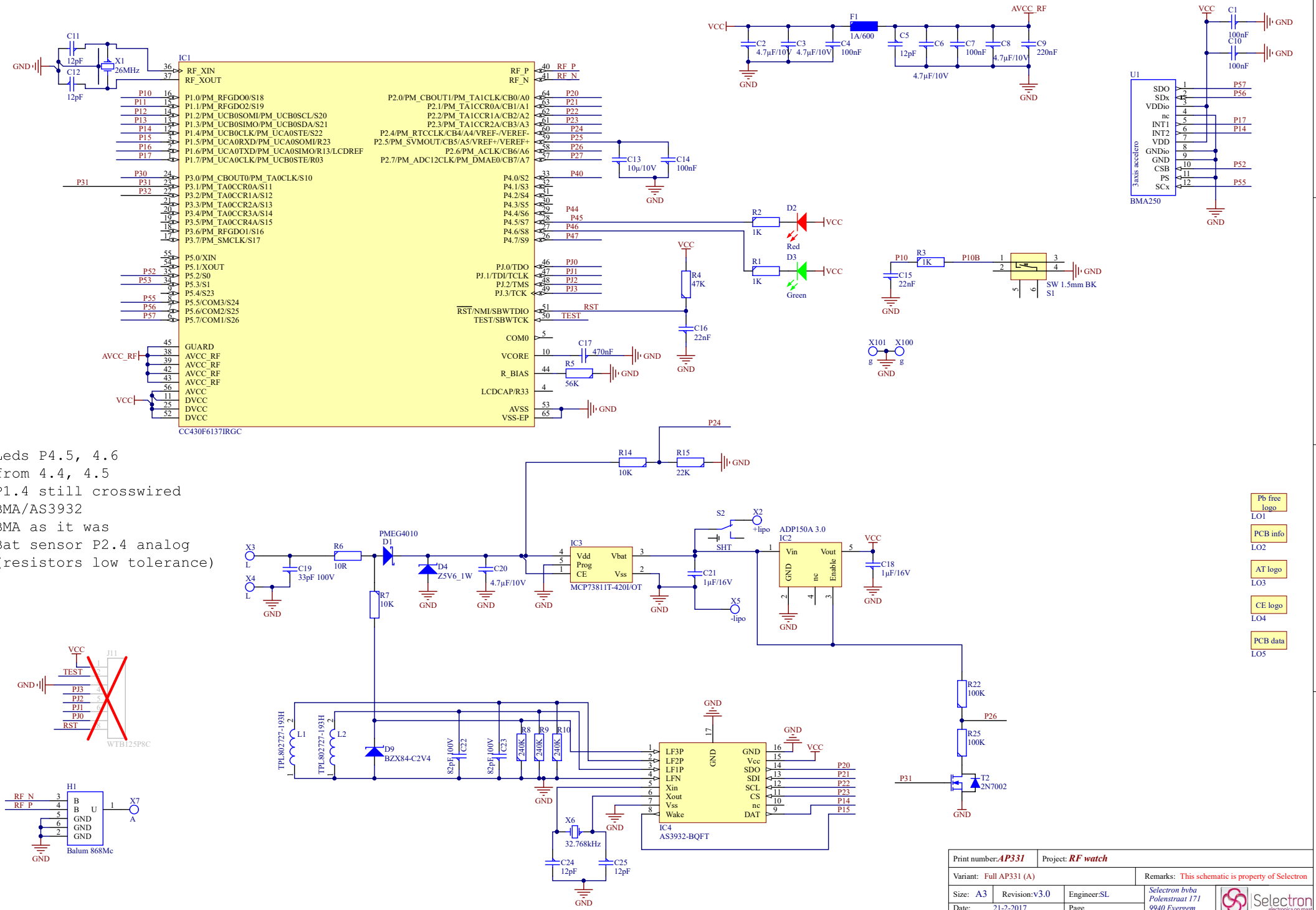
IC1
CC430F6137IRGC
RF_XIN
RF_XOUT
P1.0/PM_RFGDO0/S18
P1.1/PM_RFGDO2/S19
P1.2/PM_UCB0SOMI/PM_UCB0SCL/S20
P1.3/PM_UCB0SIMO/PM_UCB0SDA/S21
P1.4/PM_UCB0CLK/PM_UCA0STE/S22
P1.5/PM_UCA0RXD/PM_UCA0SOMI/R23
P1.6/PM_UCA0TXD/PM_UCA0SIMO/R13/LCDREF
P1.7/PM_UCA0CLK/PM_UCB0STE/R03
P3.0/PM_CBOUT0/PM_TA0CLK/S10
P3.1/PM_TA0CCR0A/S11
P3.2/PM_TA0CCR1A/S12
P3.3/PM_TA0CCR2A/S13
P3.4/PM_TA0CCR3A/S14
P3.5/PM_TA0CCR4A/S15
P3.6/PM_RFGDO1/S16
P3.7/PM_SMCLK/S17
P5.0/XIN
P5.1/XOUT
P5.2/S0
P5.3/S1
P5.4/S23
P5.5/COM3/S24
P5.6/COM2/S25
P5.7/COM1/S26
GUARD
AVCC_RF
AVCC_RF
AVCC_RF
AVCC_RF
AVCC_RF
AVCC
DVCC
DVCC
DVCC
RF_P
RF_N
P2.0/PM_CBOUT1/PM_TA1CLK/CB0/A0
P2.1/PM_TA1CCR0A/CB1/A1
P2.2/PM_TA1CCR1A/CB2/A2
P2.3/PM_TA1CCR2A/CB3/A3
P2.4/PM_RTCCLK/CB4/A4/VREF-/VEREF-
P2.5/PM_SVMOUT/CB5/A5/VREF+/VEREF+
P2.6/PM_ACLK/CB6/A6
P2.7/PM_ADC12CLK/PM_DMAE0/CB7/A7
P4.0/S2
P4.1/S3
P4.2/S4
P4.3/S5
P4.4/S6
P4.5/S7
P4.6/S8
P4.7/S9
PJ.0/TDO
PJ.1/TDI/TCLK
PJ.2/TMS
PJ.3/TCK
RST/NMI/SBWTDIO
TEST/SBWTCK
COM0
VCORE
R_BIAS
LCDCAP/R33
AVSS
VSS-EP
C11 12pF
C12 12pF
X1 26MHz
GND
VCC
AVCC_RF
C13 10µ/10V
C14 100nF
C16 22nF
C17 470nF
R4 47K
R5 56K
R2 1K
R1 1K
D2 Red
D3 Green
F1 1A/600
C2 4.7µF/10V
C3 4.7µF/10V
C4 100nF
C5 12pF
C6 4.7µF/10V
C7 100nF
C8 4.7µF/10V
C9 220nF
C1 100nF
C10 100nF
U1
BMA250
3axis accelero
SDO
SDx
VDDio
nc
INT1
INT2
VDD
GNDio
GND
CSB
PS
SCx
R3 1K
C15 22nF
SW 1.5mm BK
S1
X101
X100
R14 10K
R15 22K
Leds P4.5, 4.6
from 4.4, 4.5
P1.4 still crosswired
BMA/AS3932
BMA as it was
Bat sensor P2.4 analog
(resistors low tolerance)
X3
X4
R6 10R
PMEG4010
D1
C19 33pF 100V
R7 10K
D4 Z5V6_1W
C20 4.7µF/10V
IC3
MCP73811T-420I/OT
Vdd
Prog
CE
Vbat
Vss
S2
SHT
X2 +lipo
X5 -lipo
C21 1µF/16V
ADP150A 3.0
IC2
Vin
Vout
GND
nc
Enable
C18 1µF/16V
R22 100K
R25 100K
P26
T2 2N7002
P31
Pb free logo
LO1
PCB info
LO2
AT logo
LO3
CE logo
LO4
PCB data
LO5
J11
WTB125P8C
TEST
PJ3
PJ2
PJ1
PJ0
RST
H1
Balum 868Mc
RF_N
RF_P
X7
A
L1 TPL802727-193H
L2 TPL802727-193H
D9 BZX84-C2V4
C22 82pF 100V
C23 82pF 100V
R8 240K
R9 240K
R10 240K
IC4
AS3932-BQFT
LF3P
LF2P
LF1P
LFN
Xin
Xout
Vss
Wake
Vcc
SDO
SDI
SCL
CS
DAT
X6 32.768kHz
C24 12pF
C25 12pF
Print number: AP331
Project: RF watch
Variant: Full AP331 (A)
Remarks: This schematic is property of Selectron
Size: A3
Revision: v3.0
Engineer: SL
Date: 21-2-2017
Initial date: 06-12-2014
Page of 1
Selectron bvba
Polenstraat 171
9940 Evergem
Belgium
Selectron
electronica op maat