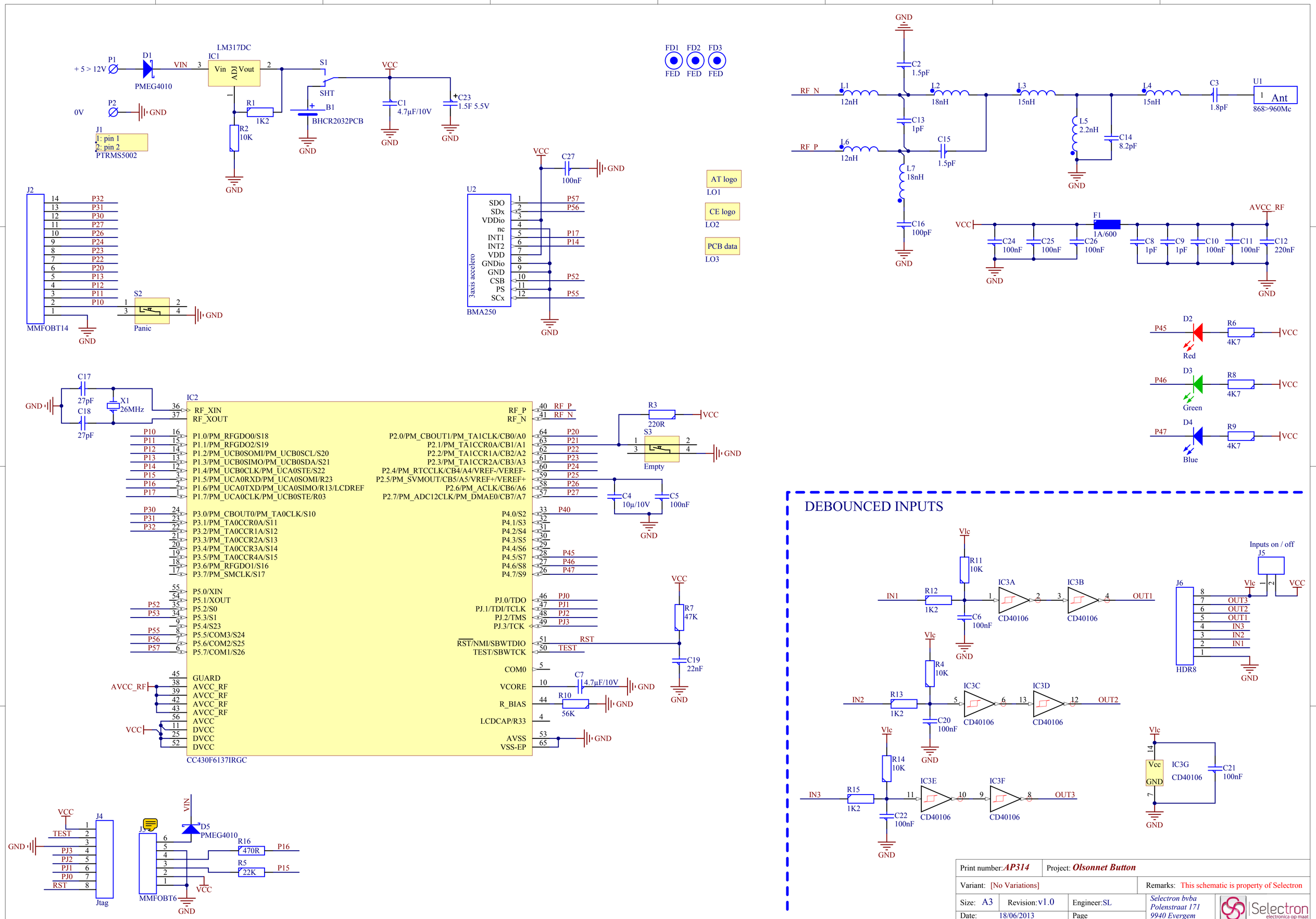

Print number: *AP314*	Project: ***Olsonnet Button***		
Variant: [No Variations]		Remarks: This schematic is property of Selectron	
Size: A3	Revision: v1.0	Engineer: SL	*Selectron byba Polenstraat 171 9940 Evergem Belgium*
Date: 18/06/2013		Page	Selectron electronica op maat
Initial date: 28-5-2013		of 1	

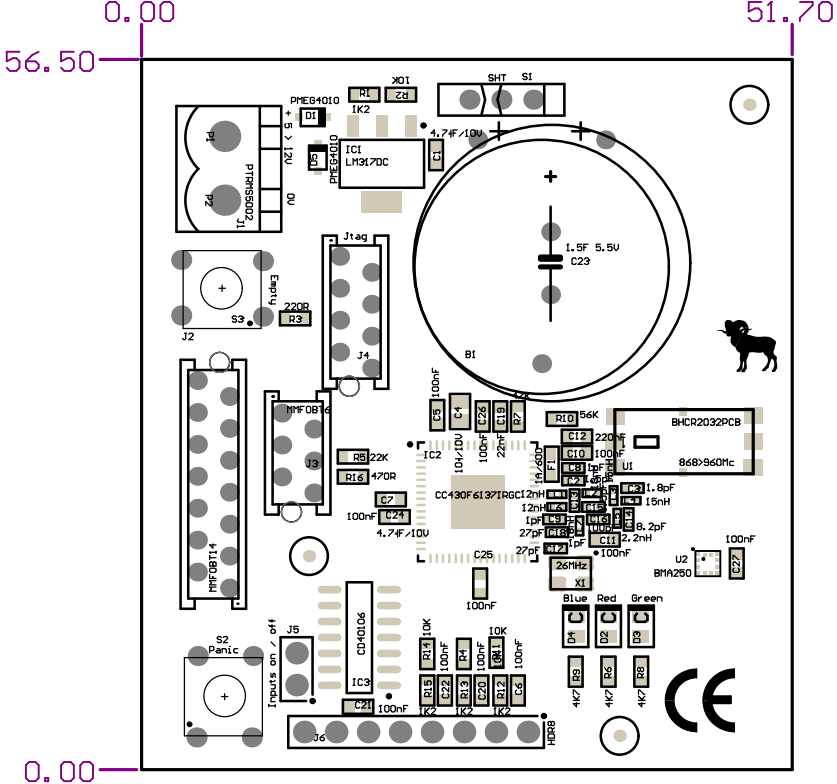

Print number: AP314	Project: Olsonnet Button		
Remarks: This PCB is property of Selectron		Selectron BVBA	Selectron electronica op maat
Revision: v1.0	Engineer: SL	Polenstraat 171	
Date: 18/06/2013	SCALE: 1.00	9940 Evergem	
Ini date: 28-5-2013	Pad count: 276	Belgium	

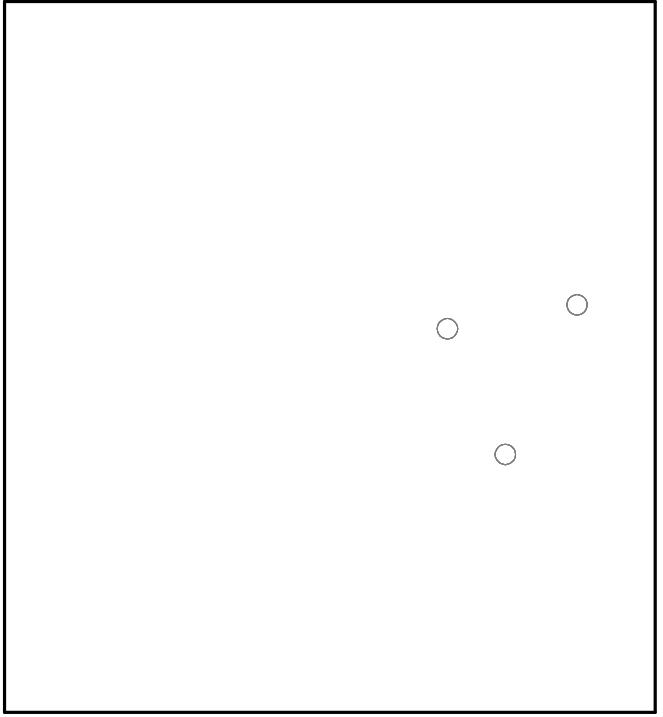

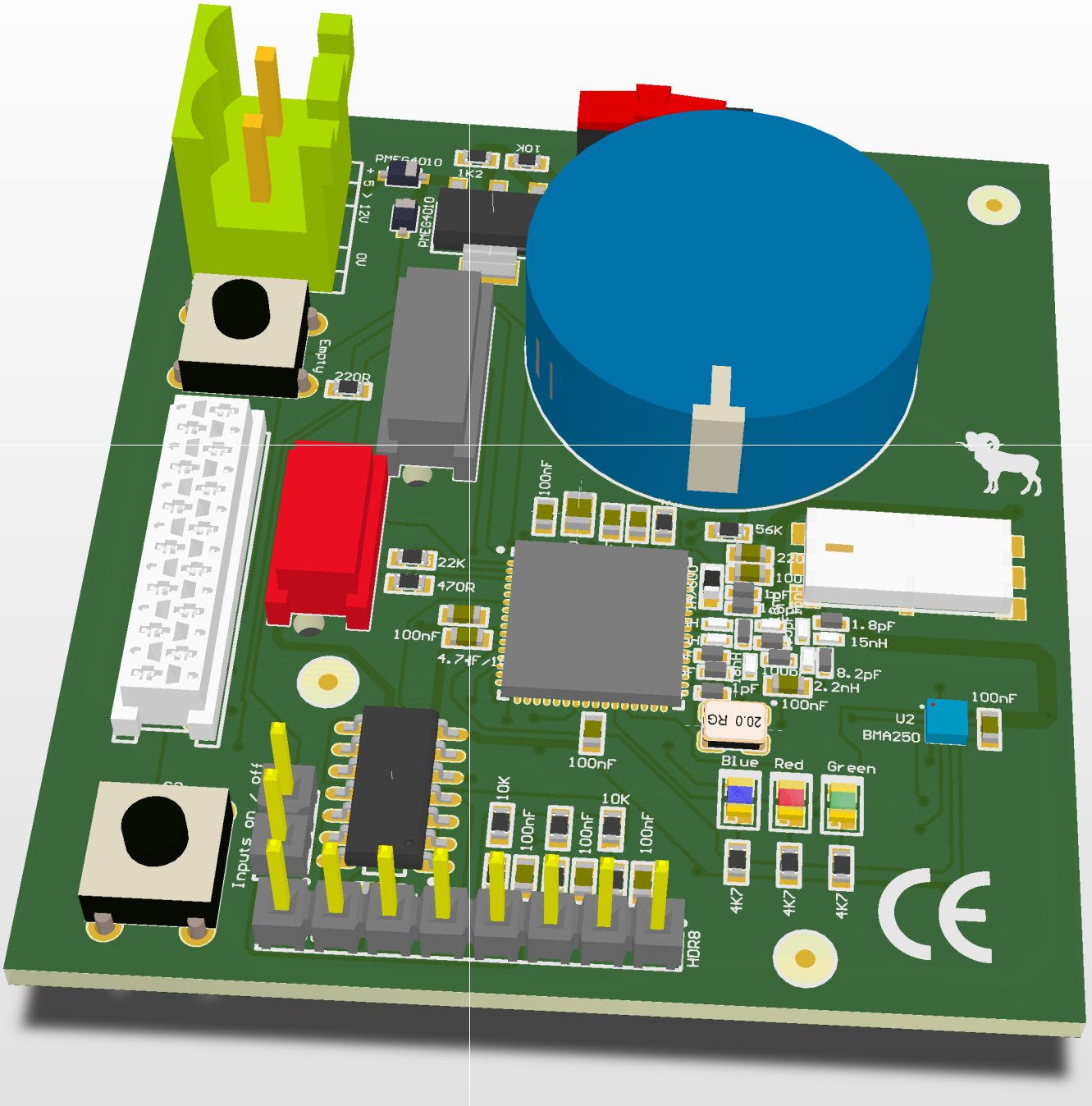
PMEG4010
1K2
10K
PMEG4010
+5V
12V
0V
Empty
220R
100nF
56K
22K
470R
100nF
4.7µF/1
1pF
1.8pF
15nH
8.2pF
2.2nH
100nF
20.0 RG
100nF
U2
BMA250
100nF
Blue
Red
Green
10K
10K
100nF
100nF
100nF
100nF
Inputs on / off
4K7
4K7
4K7
HDR8

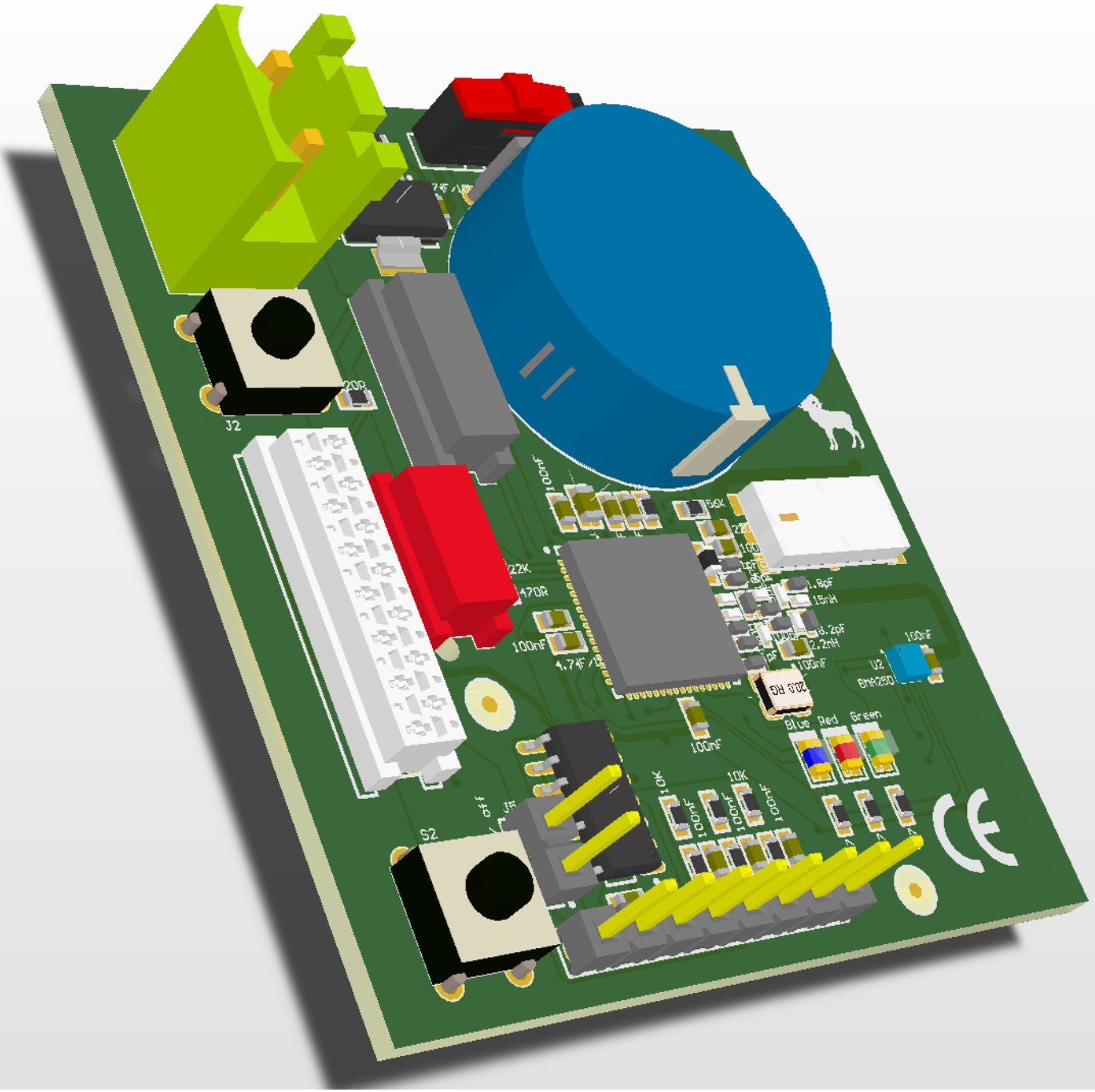
J2
20R
22K
470R
100nF
4.7µF
100nF
5.6K
1.8pF
15nH
3.2pF
2.2nH
100nF
100nF
U2
BAW250
100nF
Blue
Red
Green
10K
10K
100nF
100nF
100nF
S2