관경별 장비 및 자재 도면

[2026년~2027년 양지사 열수송관 천공 및 부단수 공사]

(주)대 호 스 토 퍼

NO.	REVISIONS	DATE	APPROVE	REMARK

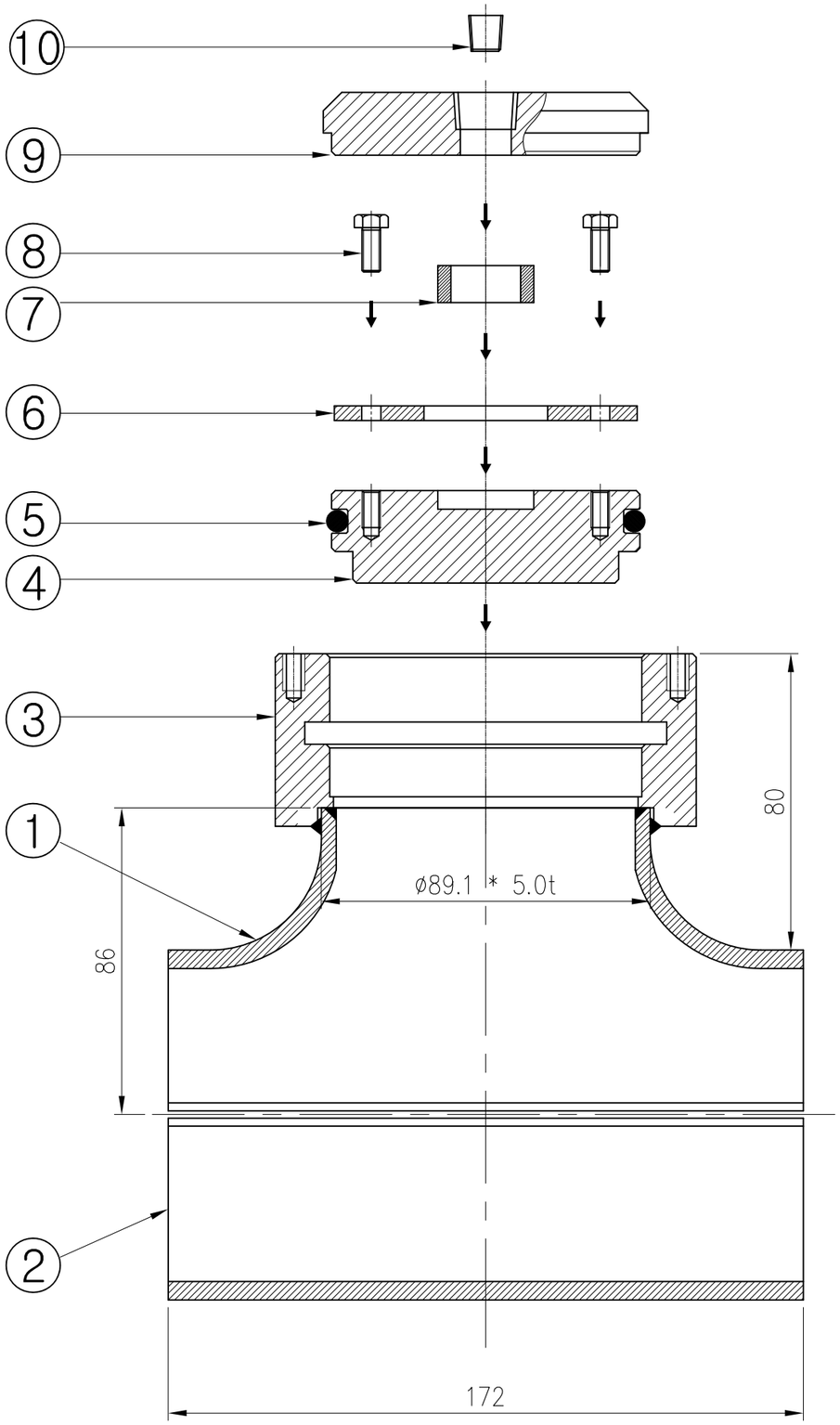

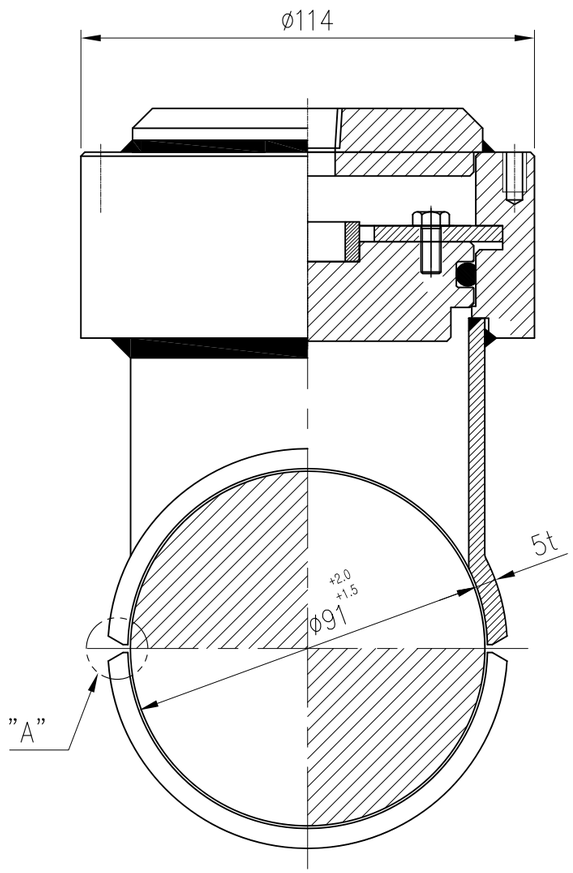

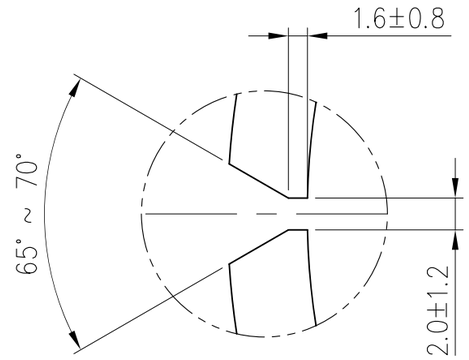

"A" DETAIL

DAE HO STOPPER IND.CO.LTD

NOTE

1. 1차 내경 가공치수 : ¢79

2. 2차 가공치수 : ¢81

ITEM NO.	DESCRIPTION	MATERIAL	Q'TY	SIZE
10	P.T PLUG	SCM440	1 EA	-
9	END CAP	A105 or SS275	1 EA	-
8	HEX-BOLT	SCM440	6 EA	M5 * 12(L)
7	RING	SPPS370 or SPP	1 EA	-
6	SEGMENT	SPHC / SS275	1 EA	-
5	O-RING	Viton	1 EA	-
4	L.O.R - PLUG	A105 or SS275	1 EA	-
3	HOLDER	A105 or SS275	1 EA	-
2	하부 PAD	SPPS370	1 EA	-
1	상부 PAD	SPPS370	1 EA	-

Drawn	Design	Check	Approve

Project	Title
지역난방공사 STOPPLE FITTING	LAY OUT 80A * 150#

Scale	Unit	Date:	DWG. NO.
A3 1/1.5	1/1	14.08.16	DHC03-□□□□□□□□

NO.	REVISIONS	DATE	APPROVE	REMARK

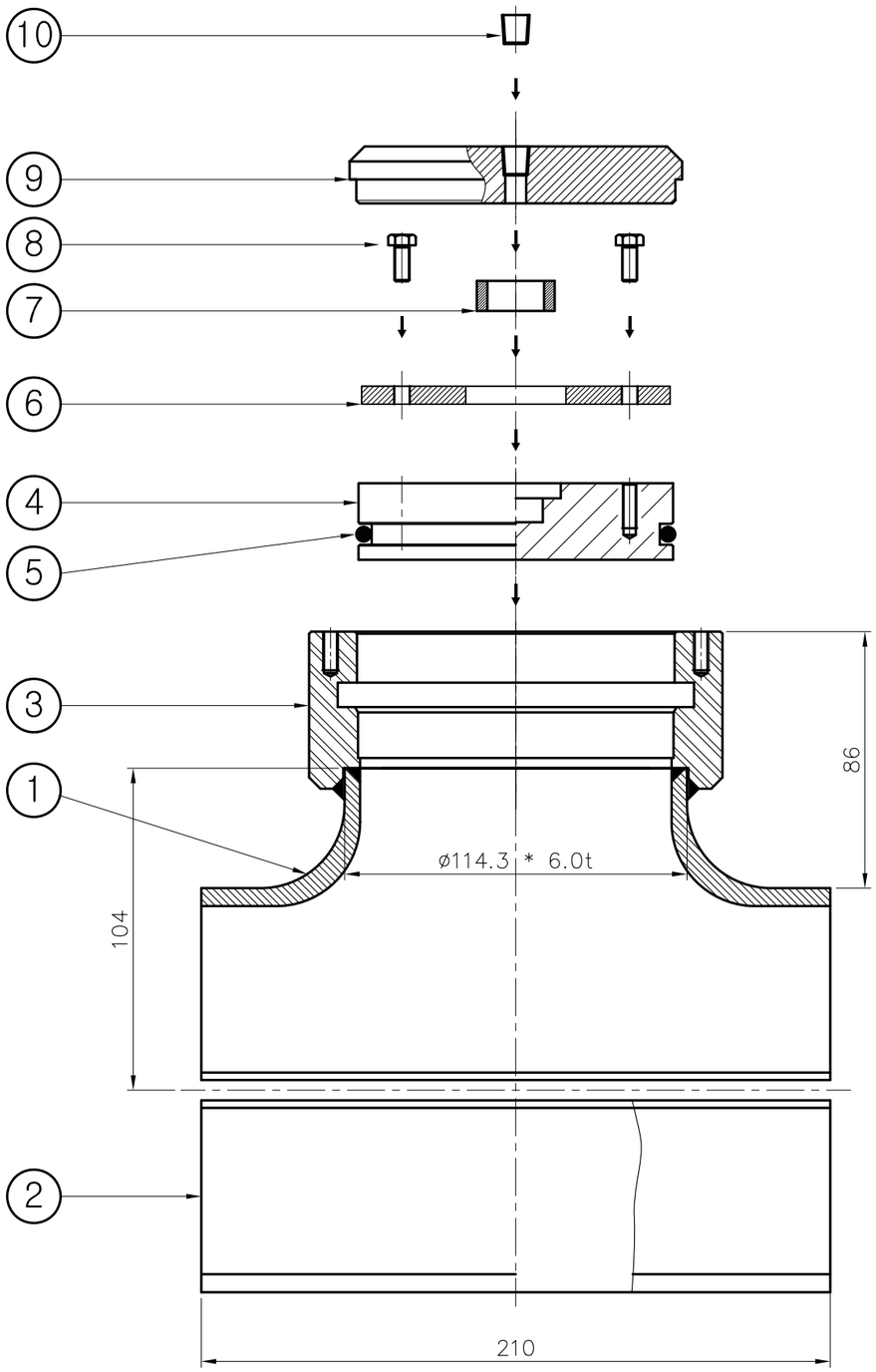

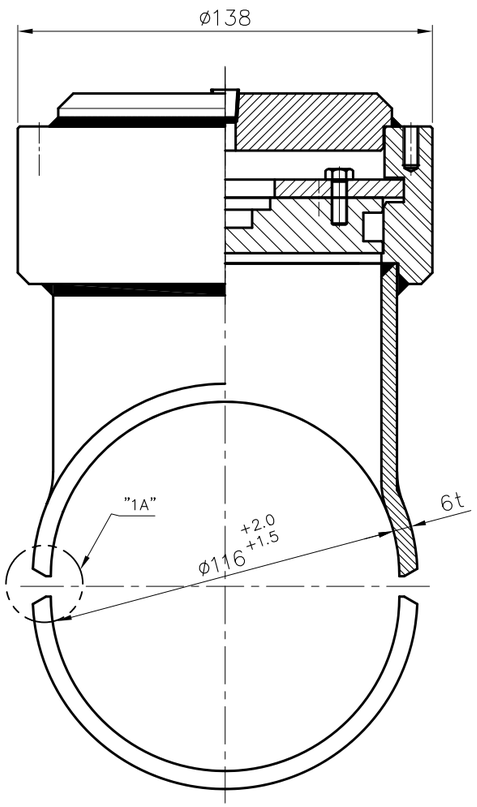

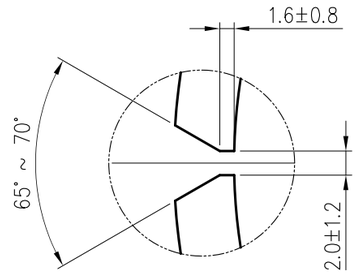

"A" DETAIL

DAE HO STOPPER IND.CO.LTD

ITEM NO.	DESCRIPTION	MATERIAL	Q'TY	SIZE
10	P.T PLUG	SCM440	1 EA	-
9	END CAP	A105 or SS275	1 EA	-
8	HEX-BOLT	SCM440	6 EA	M5 * 12(L)
7	RING	SPPS370 or SPP	1 EA	-
6	SEGMENT	SPHC / SS275	1 EA	-
5	O-RING	Viton	1 EA	-
4	L.O.R - PLUG	A105 or SS275	1 EA	-
3	HOLDER	A105 or SS275	1 EA	-
2	하부 PAD	SPPS370	1 EA	-
1	상부 PAD	SPPS370	1 EA	-

Drawn	Design	Check	Approve

Project	Title
지역난방공사 STOPPLE FITTING	LAY OUT 100A * 150#

Scale	Unit	Date:	DWG. NO.
A3 1/2	1/1	14.08.16	DHC03-□□□□□□□□

NO.	REVISIONS	DATE	APPROVE	REMARK

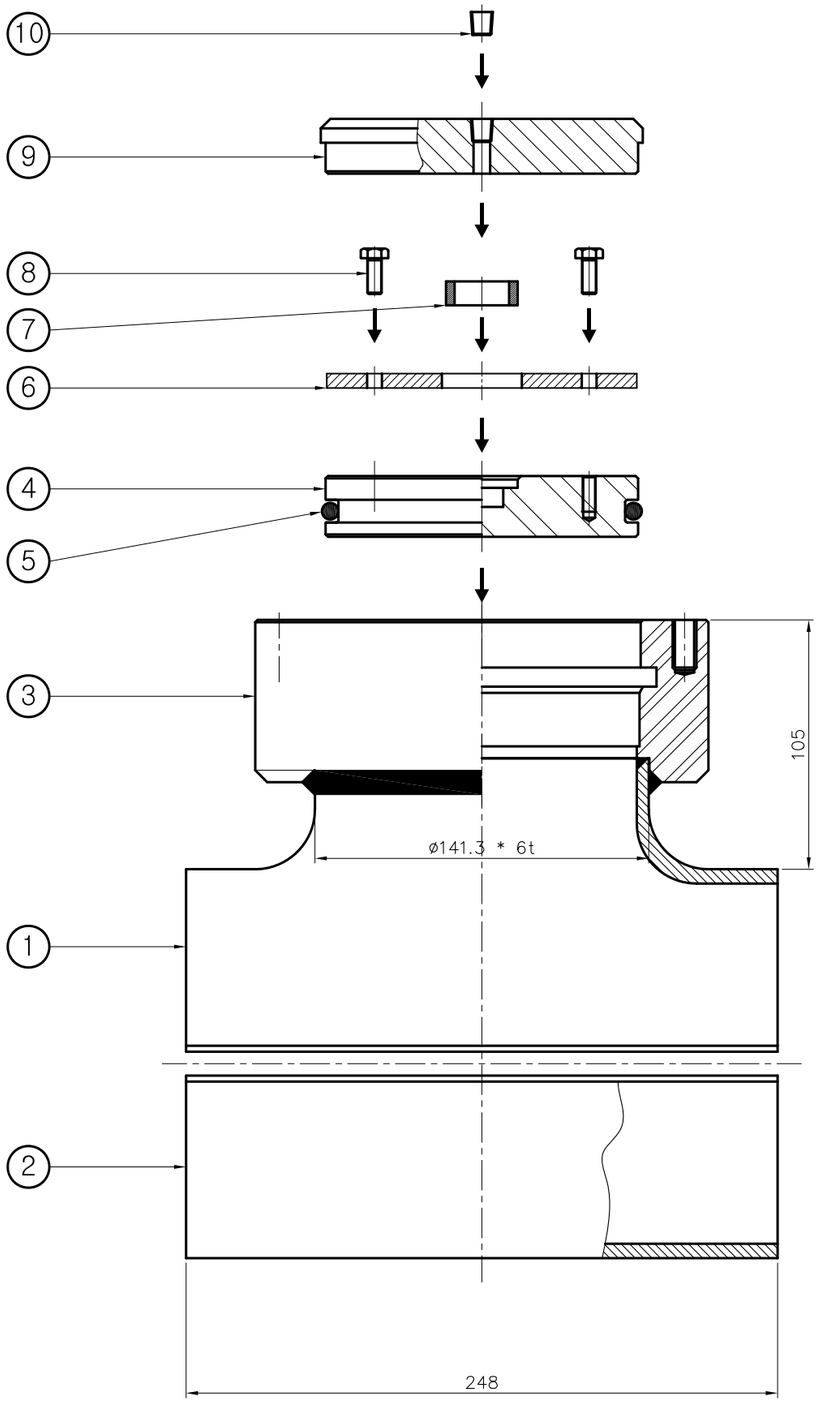

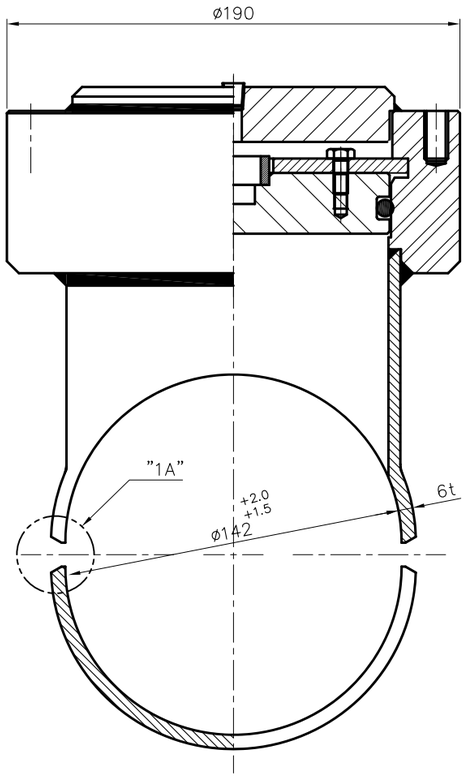

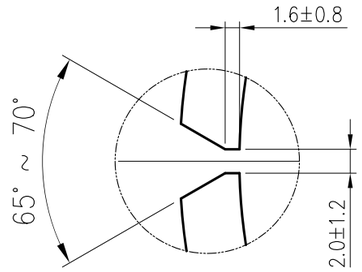

"A" DETAIL

DAE HO STOPPER IND.CO.LTD

ITEM NO.	DESCRIPTION	MATERIAL	Q'TY	SIZE
10	P.T PLUG	SCM440	1 EA	-
9	END CAP	A105 or SS275	1 EA	-
8	HEX-BOLT	SCM440	6 EA	M6 * 15(L)
7	RING	SPPS370 or SPP	1 EA	-
6	SEGMENT	SPHC / SS275	1 EA	-
5	O-RING	Viton	1 EA	-
4	L.O.R - PLUG	A105 or SS275	1 EA	-
3	HOLDER	A105 or SS275	1 EA	-
2	하부 PAD	SPPS370	1 EA	-
1	상부 PAD	SPPS370	1 EA	-

Drawn	Design	Check	Approve

Project	Title
지역난방공사 STOPPLE FITTING	LAY OUT 125A * 150#

Scale	Unit	Date:	DWG. NO.
A3 1/2.5	1/1	14.08.16	DHC03-□□□□□□□□

NO.	REVISIONS	DATE	APPROVE	REMARK

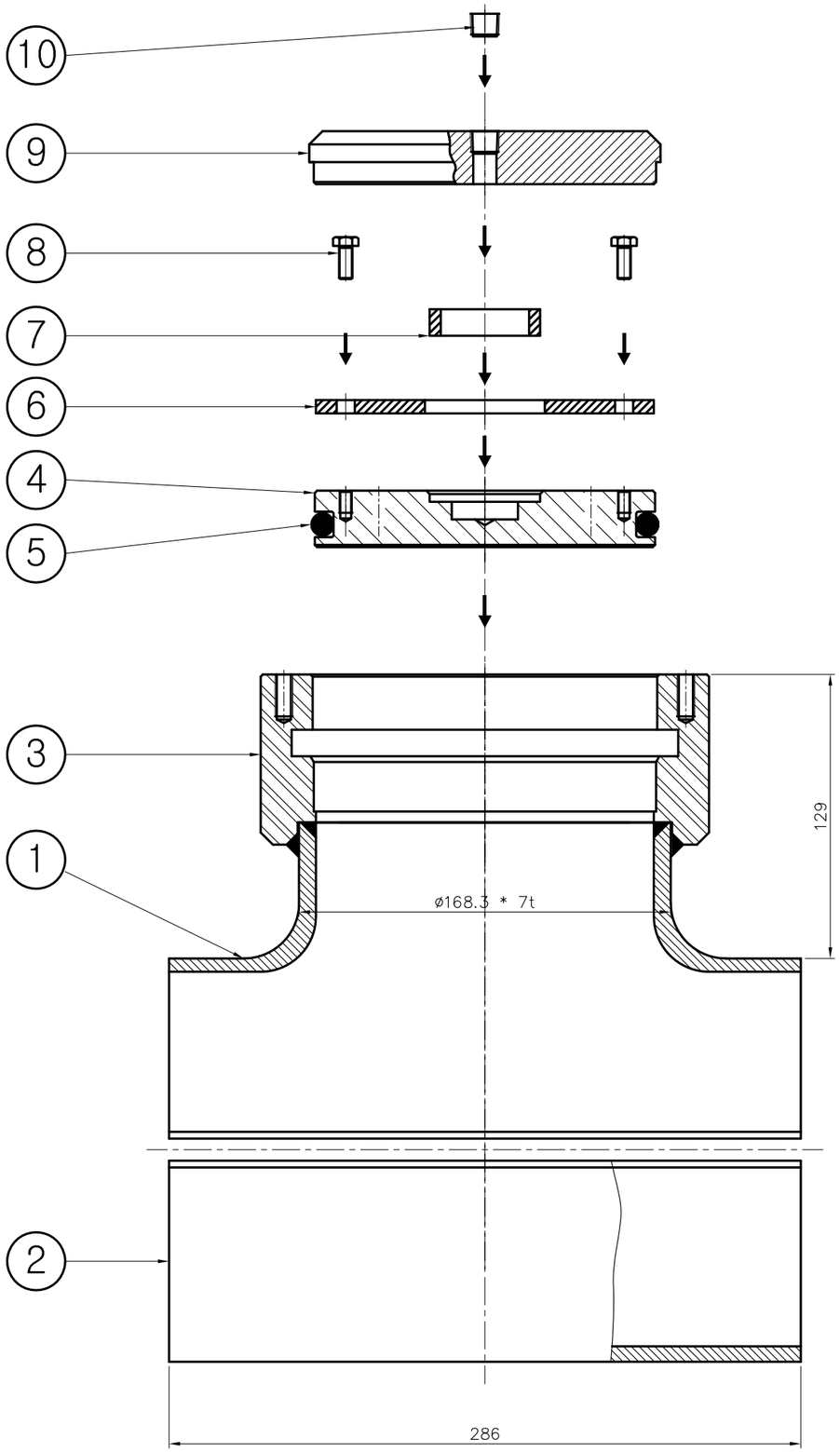

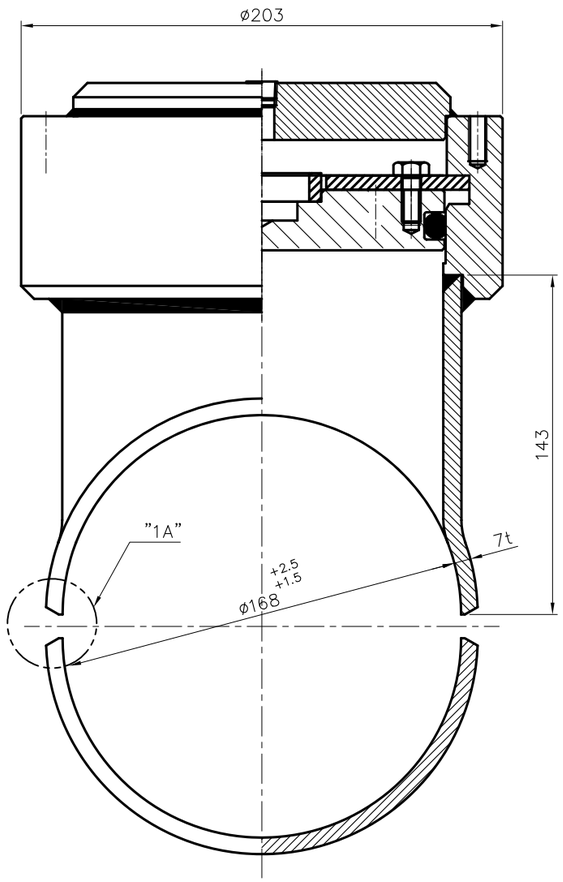

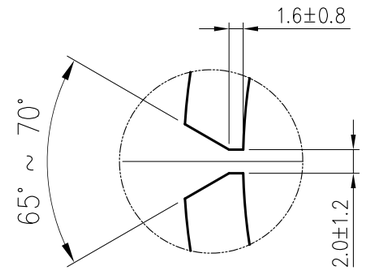

"A" DETAIL

DAE HO STOPPER IND.CO.LTD

note

1. 1차 내경 가공 치수 : ø154

ITEM NO.	DESCRIPTION	MATERIAL	Q'TY	SIZE
10	P.T PLUG	SCM440	1 EA	-
9	END CAP	A105 or SS275	1 EA	-
8	HEX-BOLT	SCM440	6 EA	M6 * 15(L)
7	RING	SPPS370 or SPP	1 EA	-
6	SEGMENT	SPHC / SS275	1 EA	-
5	O-RING	Viton	1 EA	-
4	L.O.R - PLUG	A105 or SS275	1 EA	-
3	HOLDER	A105 or SS275	1 EA	-
2	하부 PAD	SPPS370	1 EA	-
1	상부 PAD	SPPS370	1 EA	-

Drawn	Design	Check	Approve

Project	Title
지역난방공사 STOPPLE FITTING	LAY OUT 150A * 150#

Scale	Unit	Date:	DWG. NO.
A3 1/2.5	1/1	14.08.16	DHC03-□□□□□□□□

NO.	REVISIONS	DATE	APPROVE	REMARK

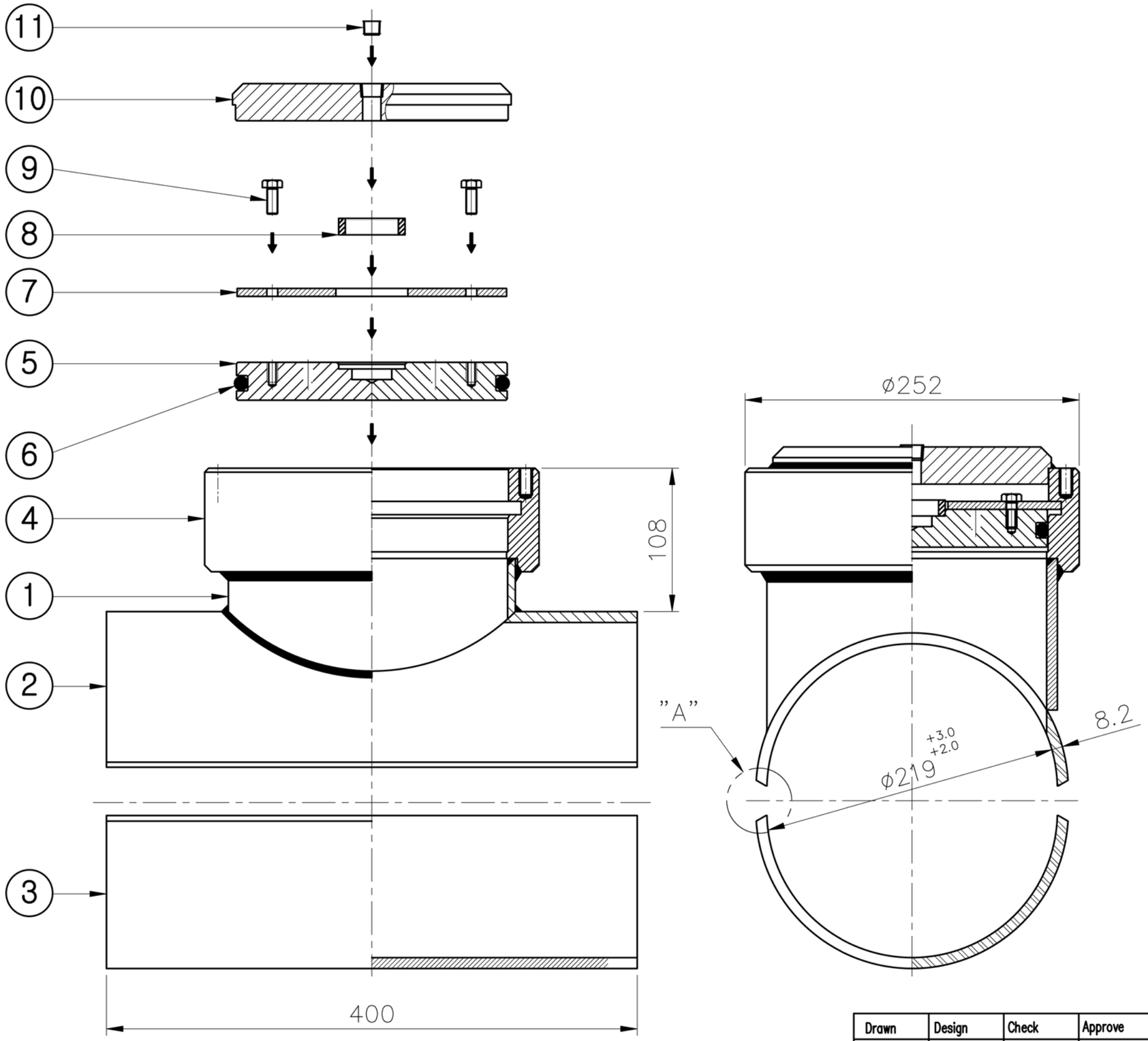

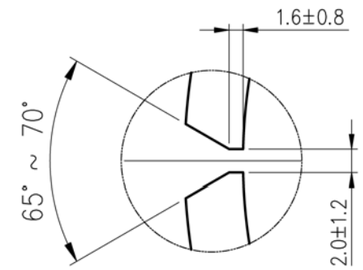

"A" DETAIL

DAE HO STOPPER IND.CO.LTD

ITEM NO.	DESCRIPTION	MATERIAL	Q'TY	SIZE
11	P.T PLUG	SCM440	1 EA	-
10	END CAP	A105 or SS275	1 EA	
9	HEX-BOLT	SCM440	6 EA	M8 * 20(L)
8	RING	SPPS370 or SPP	1 EA	-
7	SEGMENT	SPHC / SS275	1 EA	-
6	O-RING	Viton	1 EA	-
5	L.O.R - PLUG	A105 or SS275	1 EA	-
4	HOLDER	A105 or SS275	1 EA	-
3	하부 PAD	SS275	1 EA	-
2	상부 PAD	SS275	1 EA	-
1	Branch Pipe	SPPS370	1 EA	-

Drawn	Design	Check	Approve

Project	Title
지역난방공사 STOPPLE FITTING	LAY OUT 200A * 150#

Scale	Unit	Date:	DWG. NO.
A3 1/3	1/1	14.08.16	DHC03-□□□□□□□□

NO.	REVISIONS	DATE	APPROVE	REMARK

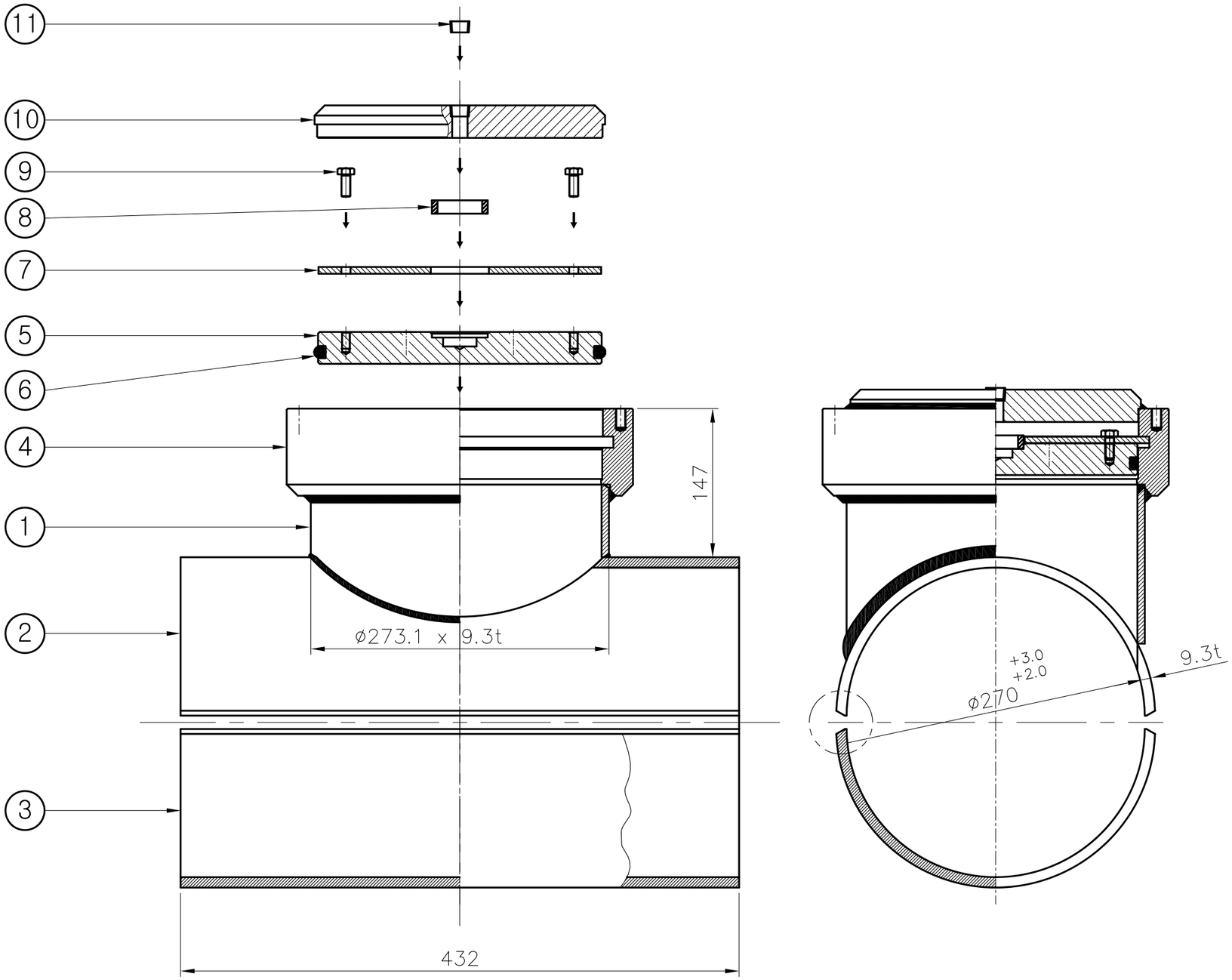

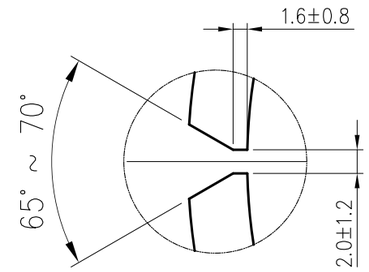

"A" DETAIL

DAE HO STOPPER IND.CO.LTD

ITEM NO.	DESCRIPTION	MATERIAL	Q'TY	SIZE
11	P.T PLUG	SCM440	1 EA	-
10	END CAP	A105 or SS275	1 EA	-
9	HEX-BOLT	SCM440	6 EA	M8 * 20(L)
8	RING	SPPS370 or SPP	1 EA	-
7	SEGMENT	SPHC / SS275	1 EA	-
6	O-RING	Viton	1 EA	-
5	L.O.R - PLUG	A105 or SS275	1 EA	-
4	HOLDER	A105 or SS275	1 EA	-
3	하부 PAD	SS275	1 EA	-
2	상부 PAD	SS275	1 EA	-
1	Branch Pipe	SPPS370	1 EA	

Drawn	Design	Check	Approve

Project	Title
지역난방공사 STOPPLE FITTING	LAY OUT 250A * 150#

Scale	Unit	Date:	DWG. NO.
A3 1/4	1/1	14.08.16	DHC03-□□□□□□□□

NO.	REVISIONS	DATE	APPROVE	REMARK

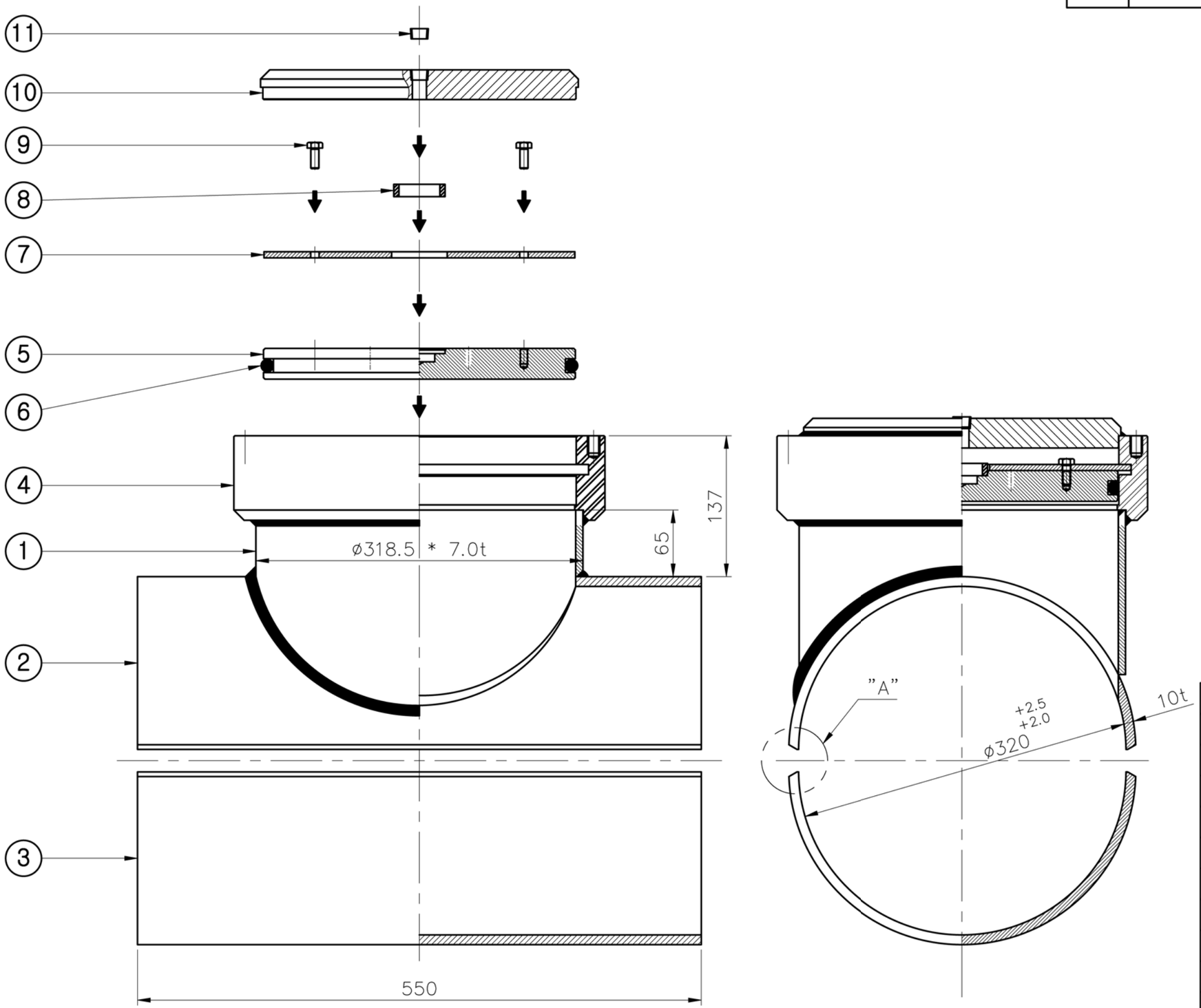

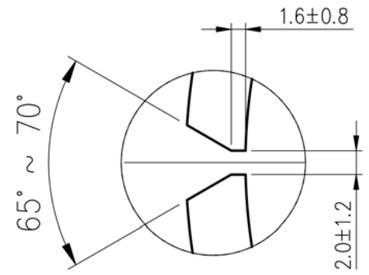

"A" DETAIL

DAE HO STOPPER IND.CO.LTD

ITEM NO.	DESCRIPTION	MATERIAL	Q'TY	SIZE
11	**P.T PLUG**	SCM440	1 EA	–
10	**END CAP**	A105 or SS275	1 EA	–
9	**HEX-BOLT**	SCM440	6 EA	M8 * 20(L)
8	**RING**	SPPS370 or SPP	1 EA	–
7	**SEGMENT**	SPHC / SS275	1 EA	–
6	**O-RING**	Viton	1 EA	–
5	**L.O.R – PLUG**	A105 or SS275	1 EA	–
4	**HOLDER**	A105 or SS275	1 EA	–
3	**하부 PAD**	SS275	1 EA	–
2	**상부 PAD**	SS275	1 EA	–
1	**Branch Pipe**	SPPS370	1 EA	–

Drawn	Design	Check	Approve

Project	Title
지역난방공사 STOPPLE FITTING	LAY OUT 300A * 150#

Scale	Unit	Date:	DWG. NO.
A3 1/4	1/1	14.08.16	DHC03-□□□□□□□□

NO.	REVISIONS	DATE	APPROVE	REMARK

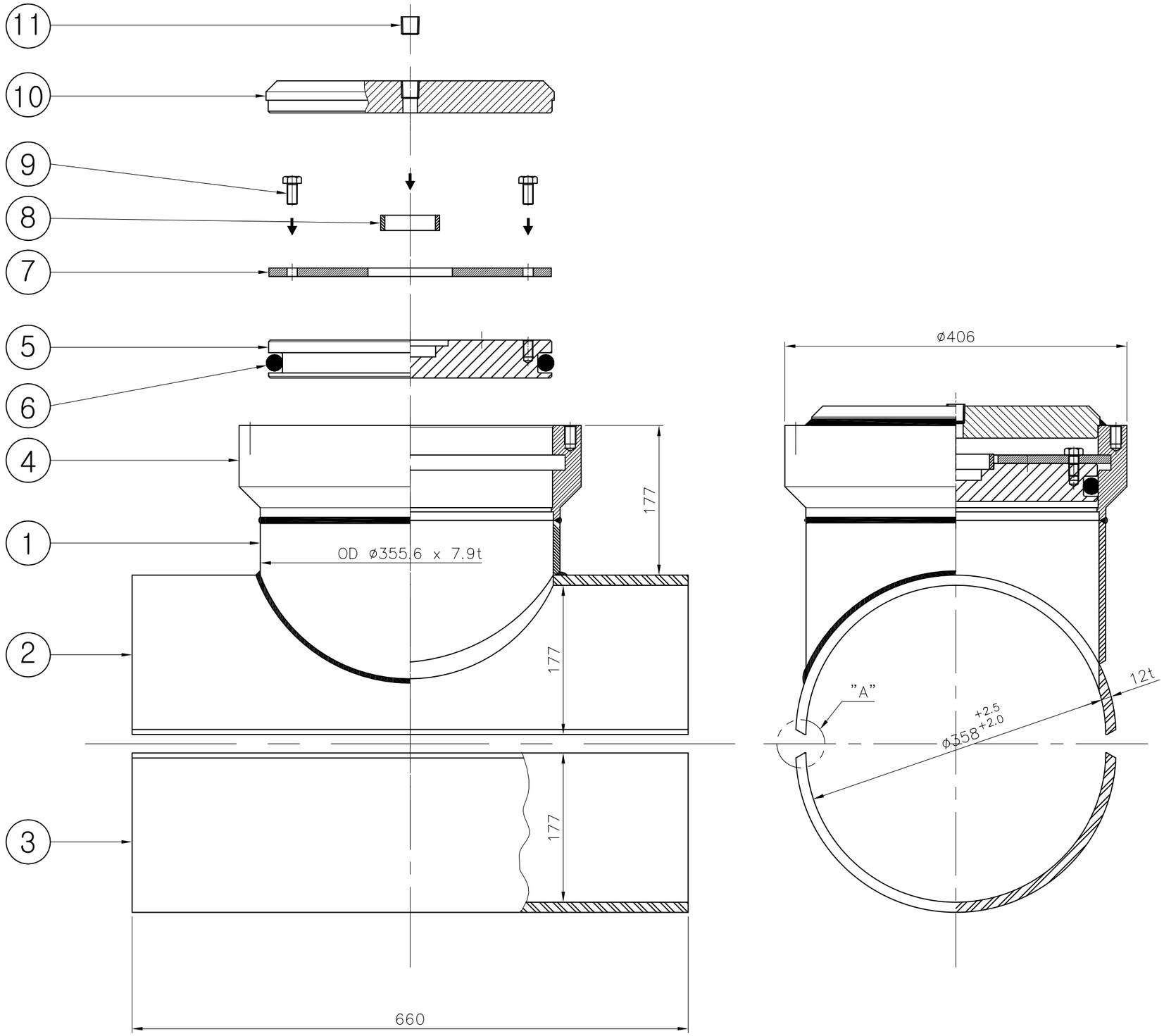

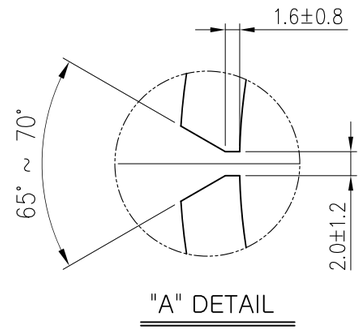

DAE HO STOPPER IND.CO.LTD

ITEM NO.	DESCRIPTION	MATERIAL	Q'TY	SIZE
11	P.T PLUG	SCM440	1 EA	-
10	END CAP	A105 or SS275	1 EA	-
9	HEX-BOLT	SCM440	10 EA	M12 * 25(L)
8	RING	SPPS370 or SPP	1 EA	-
7	SEGMENT	SPHC / SS275	1 EA	-
6	O-RING	Viton	1 EA	-
5	L.O.R - PLUG	A105 or SS275	1 EA	-
4	HOLDER	A105 or SS275	1 EA	-
3	하부 PAD	SS275	1 EA	-
2	상부 PAD	SS275	1 EA	-
1	Branch Pipe	SPPS370	1 EA	-

Drawn	Design	Check	Approve

Project	Title
지역난방공사 STOPPLE FITTING	LAY OUT 350A * 150#

Scale	Unit	Date:	DWG. NO.
A3 1/5	1/1	14.08.16	DHC03-□□□□□□□□

NO.	REVISIONS	DATE	APPROVE	REMARK

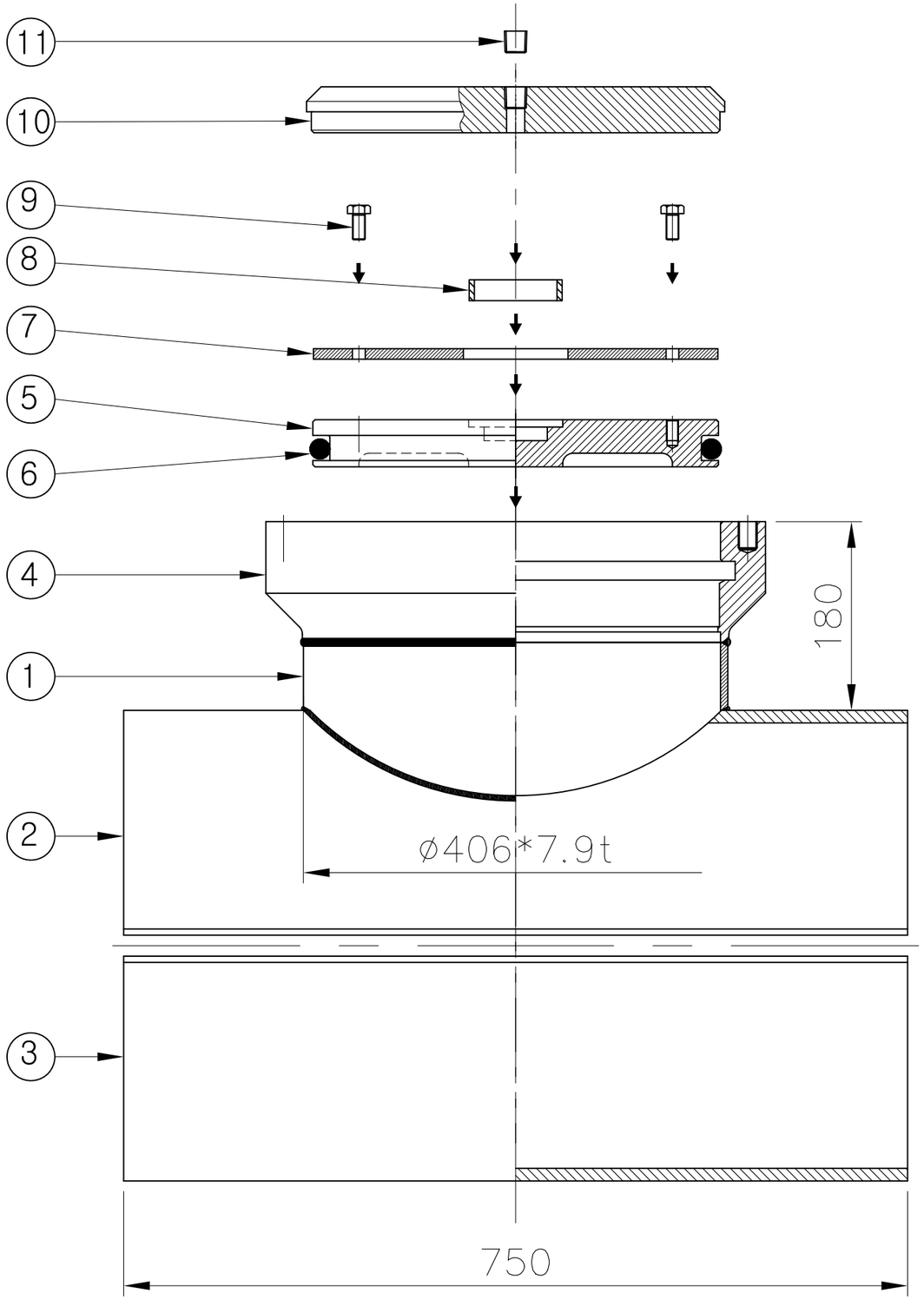

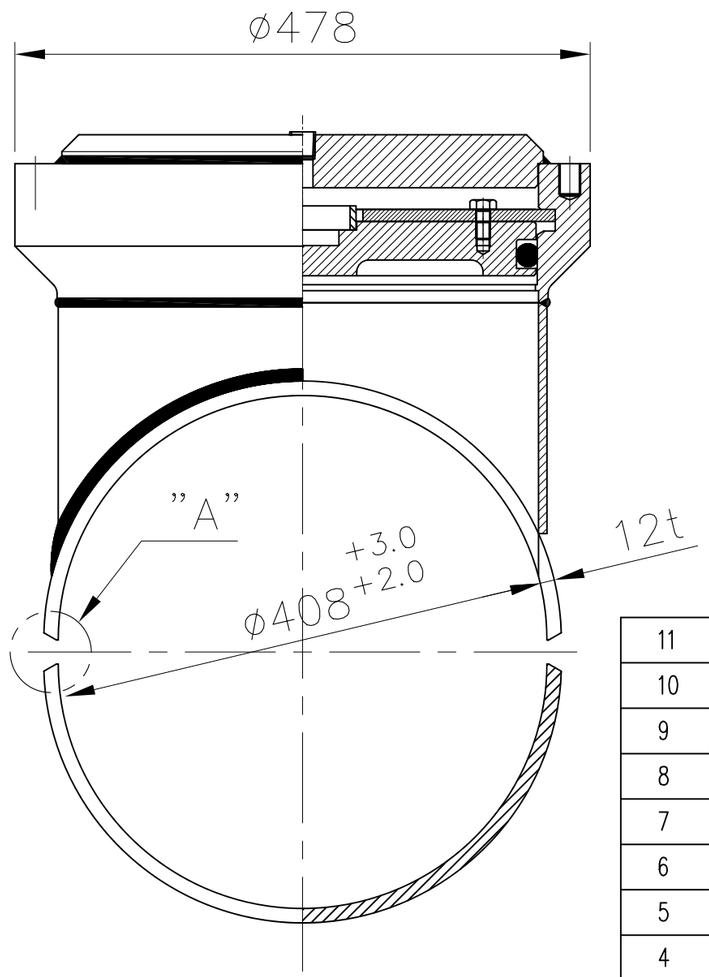

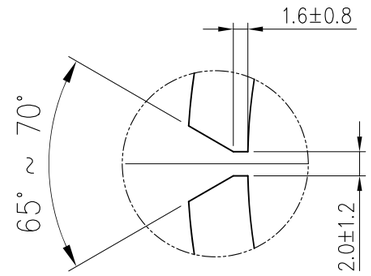

"A" DETAIL

DAE HO STOPPER IND.CO.LTD

ITEM NO.	DESCRIPTION	MATERIAL	Q'TY	SIZE
11	P.T PLUG	SCM440	1 EA	-
10	END CAP	A105 or SS275	1 EA	-
9	HEX-BOLT	SCM440	10 EA	M12 * 25(l)
8	RING	SPPS370 or SPP	1 EA	-
7	SEGMENT	SPHC / SS275	1 EA	-
6	O-RING	Viton	1 EA	-
5	L.O.R - PLUG	A105 or SS275	1 EA	-
4	HOLDER	A105 or SS275	1 EA	-
3	하부 PAD	SS275	1 EA	-
2	상부 PAD	SS275	1 EA	-
1	Branch Pipe	SPPS370	1 EA	-

Drawn	Design	Check	Approve

Project	Title
지역난방공사 STOPPLE FITTING	LAY OUT 400A * 150#

Scale	Unit	Date:	DWG. NO.
A3 1/5	1/1	14.08.16	DHC03-□□□□□□□□

NO.	REVISIONS	DATE	APPROVE	REMARK

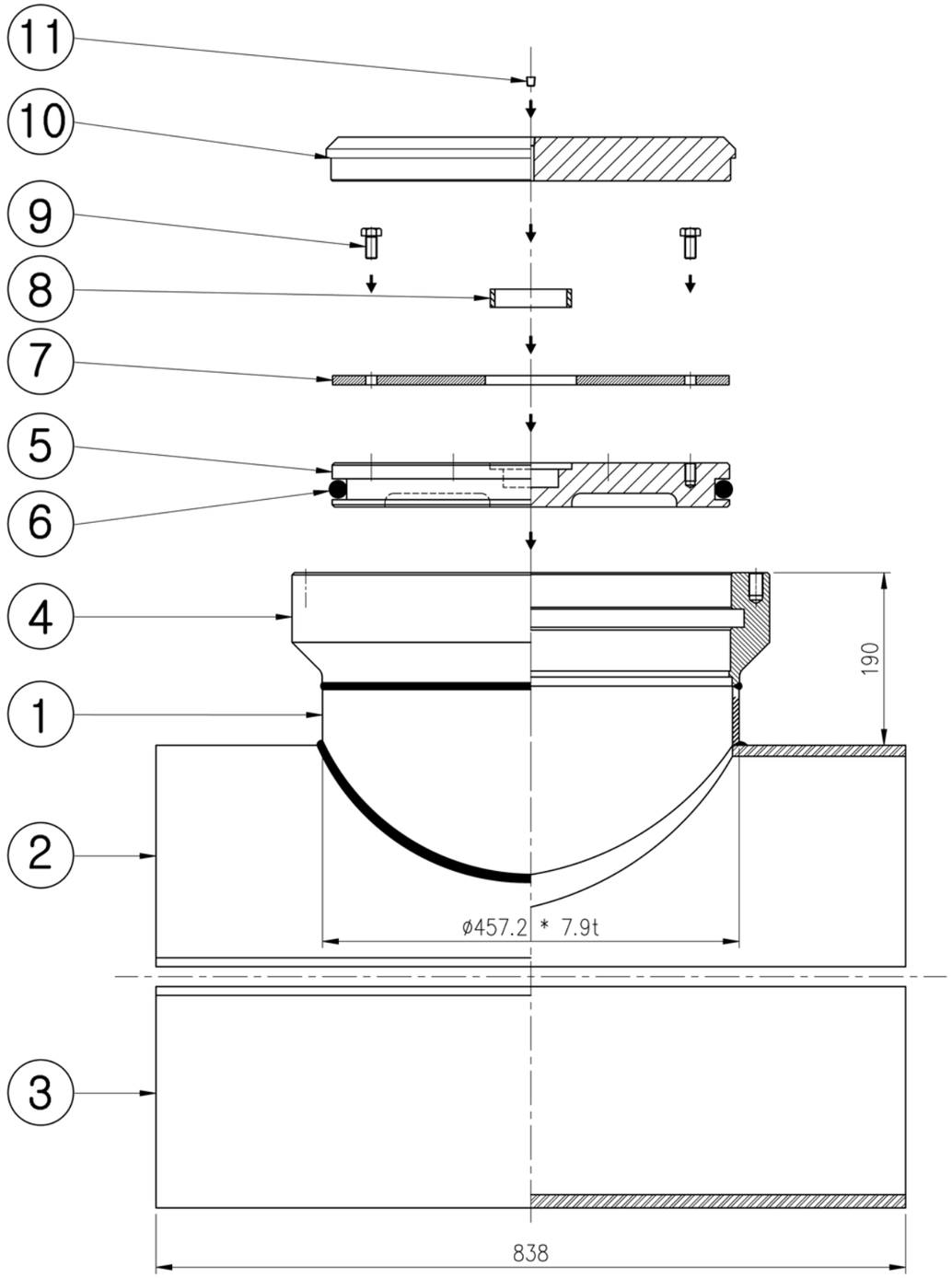

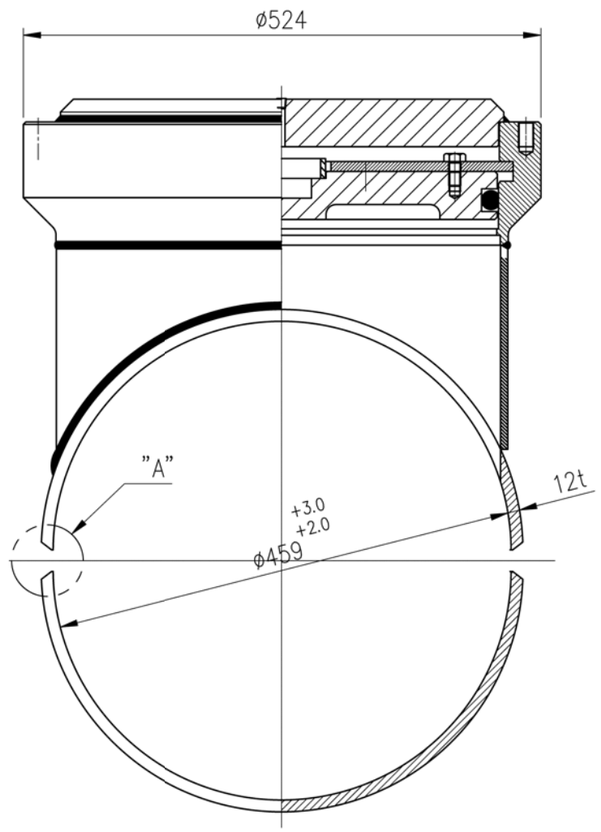

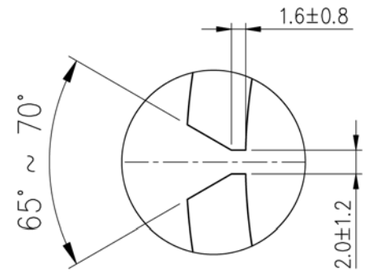

"A" DETAIL

DAE HO STOPPER IND.CO.LTD

ITEM NO.	DESCRIPTION	MATERIAL	Q'TY	SIZE
11	P.T PLUG	SCM440	1 EA	–
10	END CAP	A105 or SS275	1 EA	–
9	HEX-BOLT	SCM440	10 EA	M12 * 25(L)
8	RING	SPPS370 or SPP	1 EA	–
7	SEGMENT	SPHC / SS275	1 EA	–
6	O-RING	Viton	1 EA	–
5	L.O.R - PLUG	A105 or SS275	1 EA	–
4	HOLDER	A105 or SS275	1 EA	–
3	하부 PAD	SS275	1 EA	–
2	상부 PAD	SS275	1 EA	–
1	Branch Pipe	SS275 or SPPS370	1 EA	–

Drawn	Design	Check	Approve

Project	Title
지역난방공사 STOPPLE FITTING	LAY OUT 450A * 150#

Scale	Unit	Date:	DWG. NO.
A3 1/6	1/1	14.08.16	DHC03-□□□□□□□□

NO.	REVISIONS	DATE	APPROVE	REMARK

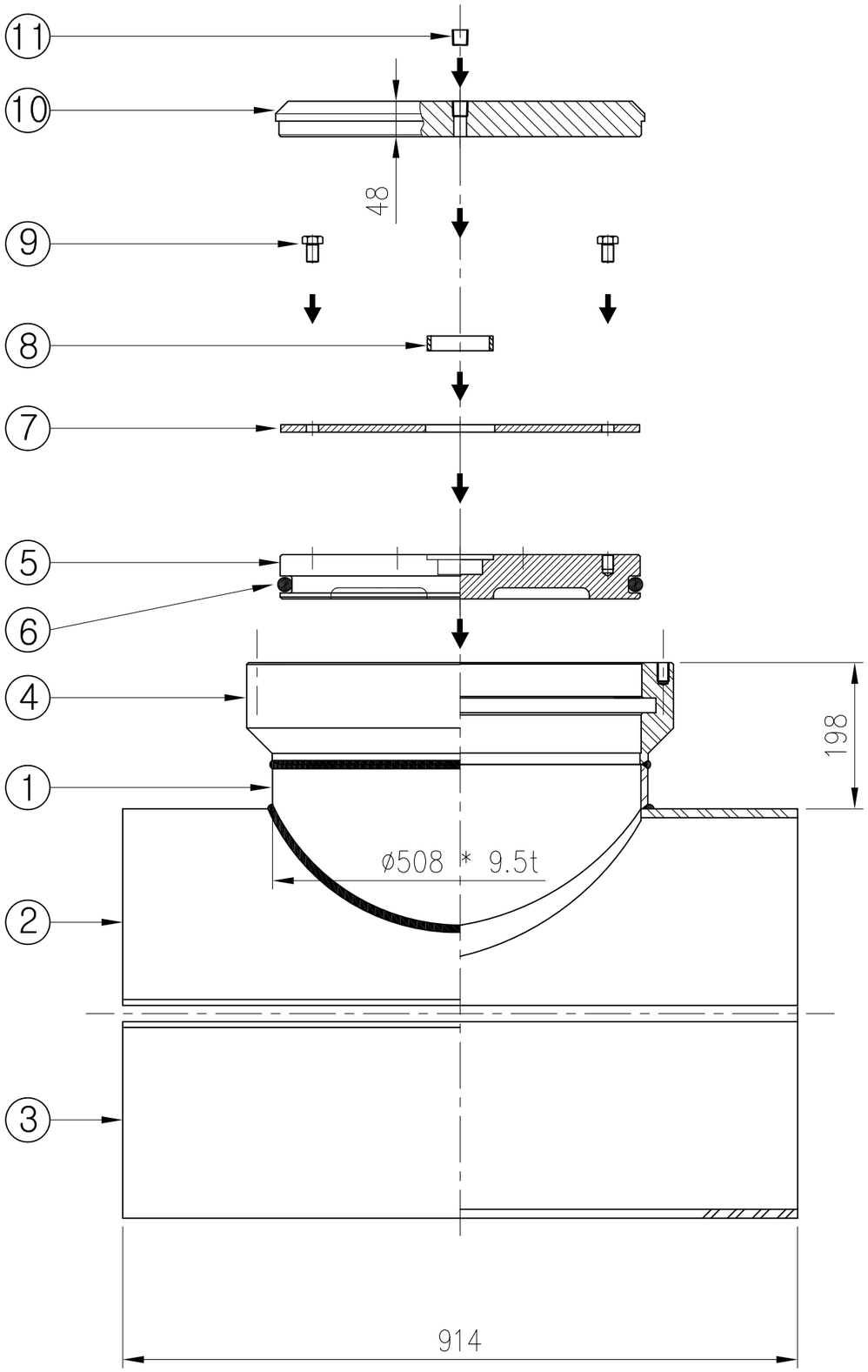

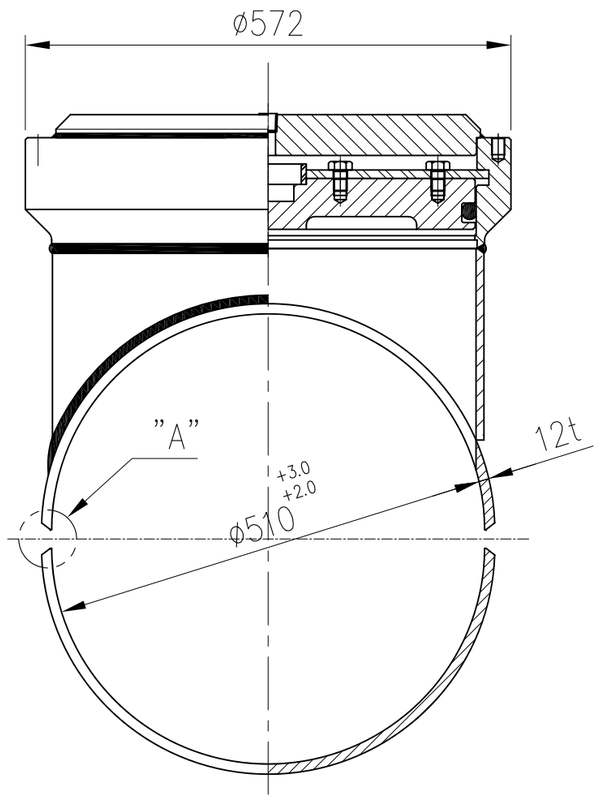

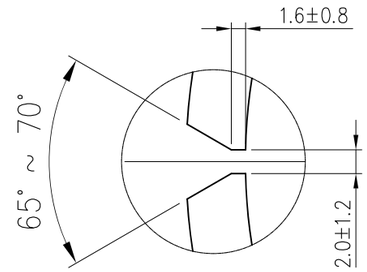

"A" DETAIL

DAE HO STOPPER IND.CO.LTD

ITEM NO.	DESCRIPTION	MATERIAL	Q'TY	SIZE
11	P.T PLUG	SCM440	1 EA	-
10	END CAP	A105 or SS275	1 EA	-
9	HEX-BOLT	SCM440	1 EA	M16 * 25(L)
8	RING	SPPS370 or SPP	1 EA	-
7	SEGMENT	SPHC / SS275	1 EA	-
6	O-RING	Viton	1 EA	-
5	L.O.R - PLUG	A105 or SS275	1 EA	-
4	HOLDER	A105 or SS275	1 EA	-
3	하부 PAD	SS275	1 EA	-
2	상부 PAD	SS275	1 EA	-
1	Branch Pipe	SS275 or SPPS370	1 EA	-

Drawn	Design	Check	Approve

Project	Title
지역난방공사 STOPPLE FITTING	LAY OUT 500A * 150#

Scale	Unit	Date:	DWG. NO.
A3 1/7	1/1	14.08.16	DHC03-□□□□□□□□

NO.	REVISIONS	DATE	APPROVE	REMARK

DAE HO STOPPER IND.CO.LTD

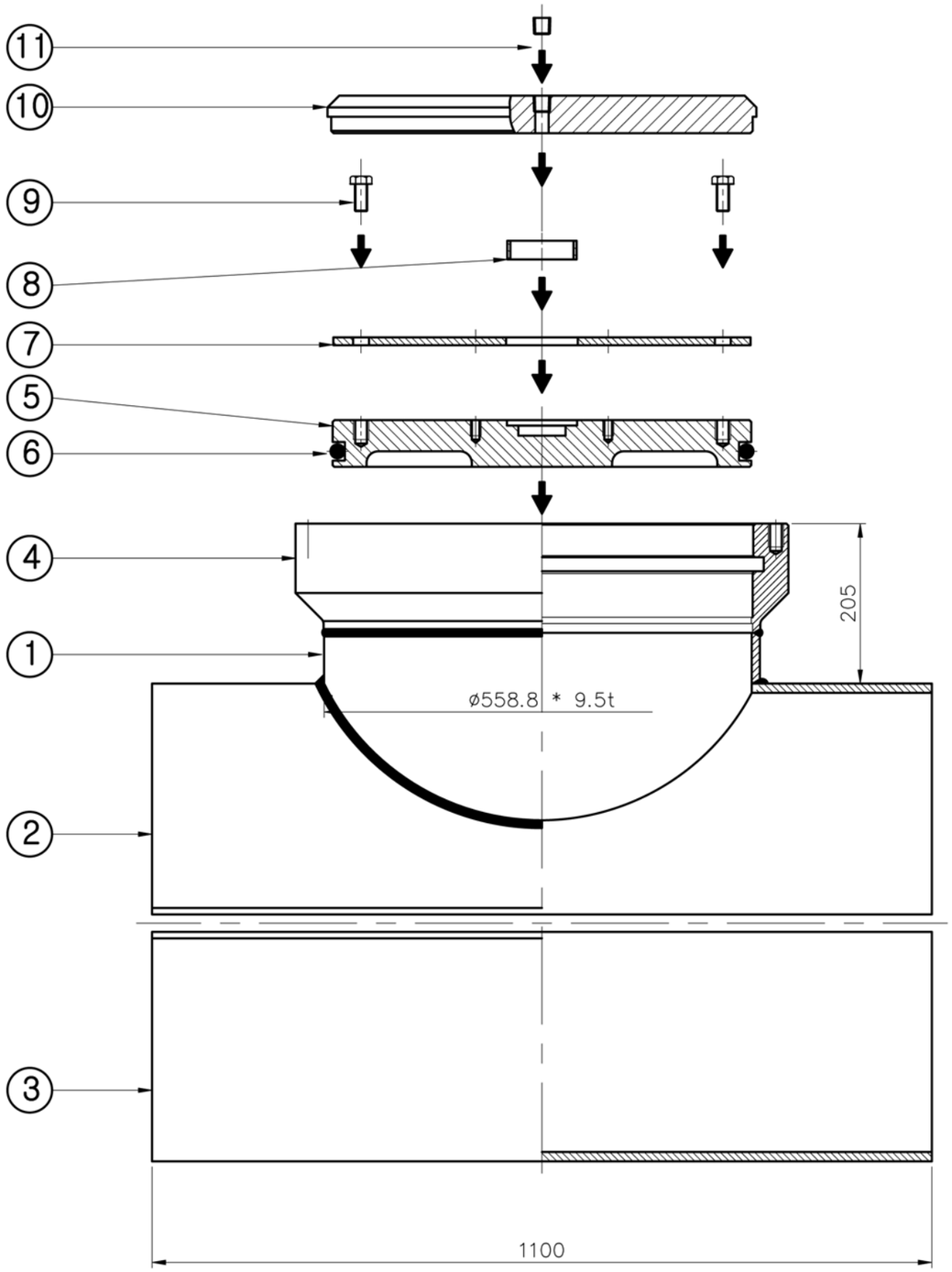

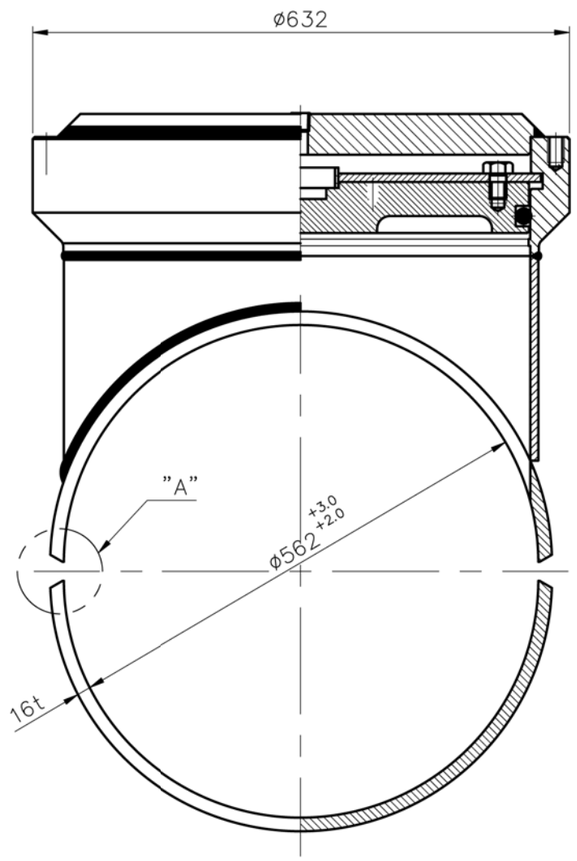

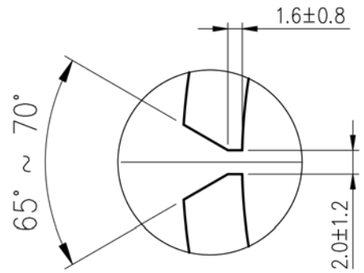

"A" DETAIL

ITEM NO.	DESCRIPTION	MATERIAL	Q'TY	SIZE
11	**P.T PLUG**	SCM440	1 EA	–
10	**END CAP**	A105 or SS275	1 EA	–
9	**HEX-BOLT**	SCM440	12 EA	M20 * 30(L)
8	**RING**	SPPS370 or SPP	1 EA	–
7	**SEGMENT**	SPHC / SS275	1 EA	–
6	**O-RING**	Viton	1 EA	–
5	**L.O.R – PLUG**	A105 or SS275	1 EA	–
4	**HOLDER**	A105 or SS275	1 EA	–
3	**하부 PAD**	SS275	1 EA	–
2	**상부 PAD**	SS275	1 EA	–
1	**Branch Pipe**	SS275 or SPPS370	1 EA	–

Drawn	Design	Check	Approve

Project	Title
지역난방공사 STOPPLE FITTING	LAY OUT 550A * 150#

Scale	Unit	Date:	DWG. NO.
A3 1/7	1/1	14.08.16	DHC03-□□□□□□□□

NO.	REVISIONS	DATE	APPROVE	REMARK

DAE HO STOPPER IND.CO.LTD

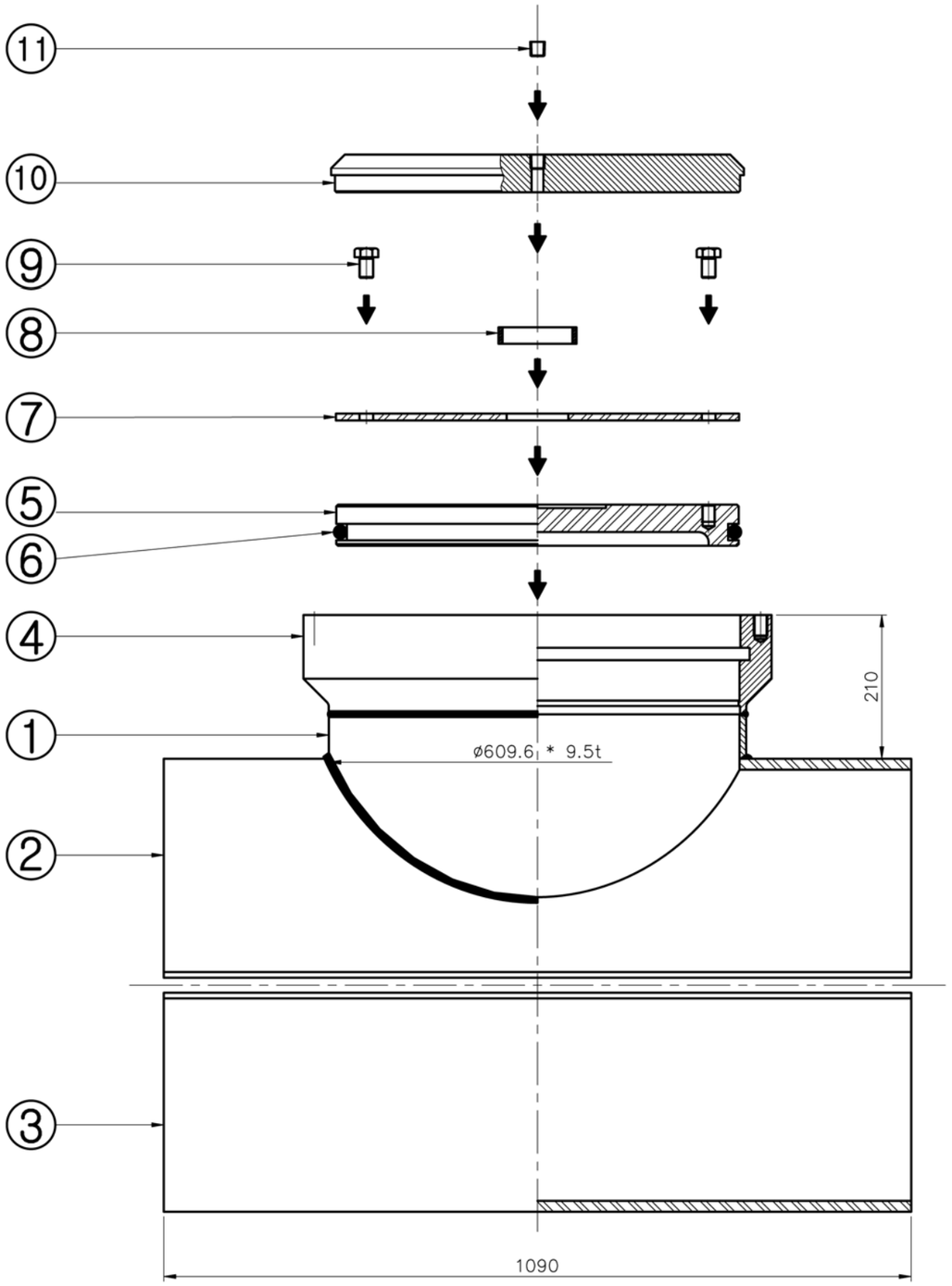

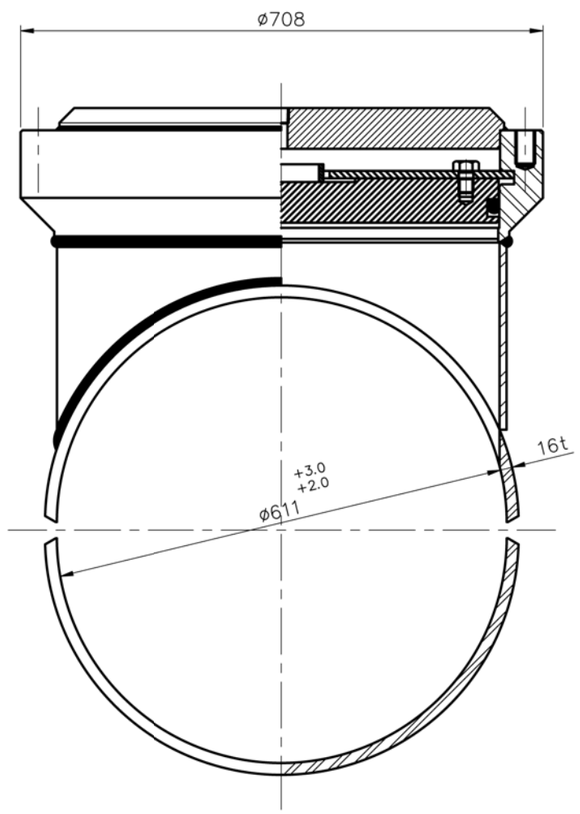

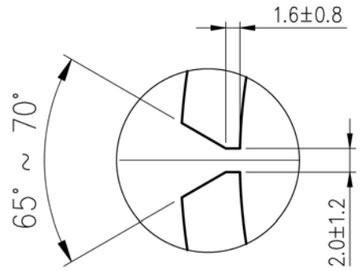

"A" DETAIL

ITEM NO.	DESCRIPTION	MATERIAL	Q'TY	SIZE
11	**P.T PLUG**	SCM440	1 EA	–
10	**END CAP**	A105 or SS275	1 EA	–
9	**HEX-BOLT**	SCM440	14 EA	M20 * 30(L)
8	**RING**	SPPS370 or SPP	1 EA	–
7	**SEGMENT**	SPHC / SS275	1 EA	–
6	**O-RING**	Viton	1 EA	–
5	**L.O.R – PLUG**	A105 or SS275	1 EA	–
4	**HOLDER**	A105 or SS275	1 EA	–
3	**하부 PAD**	SS275	1 EA	–
2	**상부 PAD**	SS275	1 EA	–
1	**Branch Pipe**	SS275 or SPPS370	1 EA	–

Drawn	Design	Check	Approve

Project	Title
지역난방공사 STOPPLE FITTING	LAY OUT 600A * 150#

Scale	Unit	Date:	DWG. NO.
A3 1/8	1/1	14.08.16	DHC03-□□□□□□□□

NO.	REVISIONS	DATE	APPROVE	REMARK

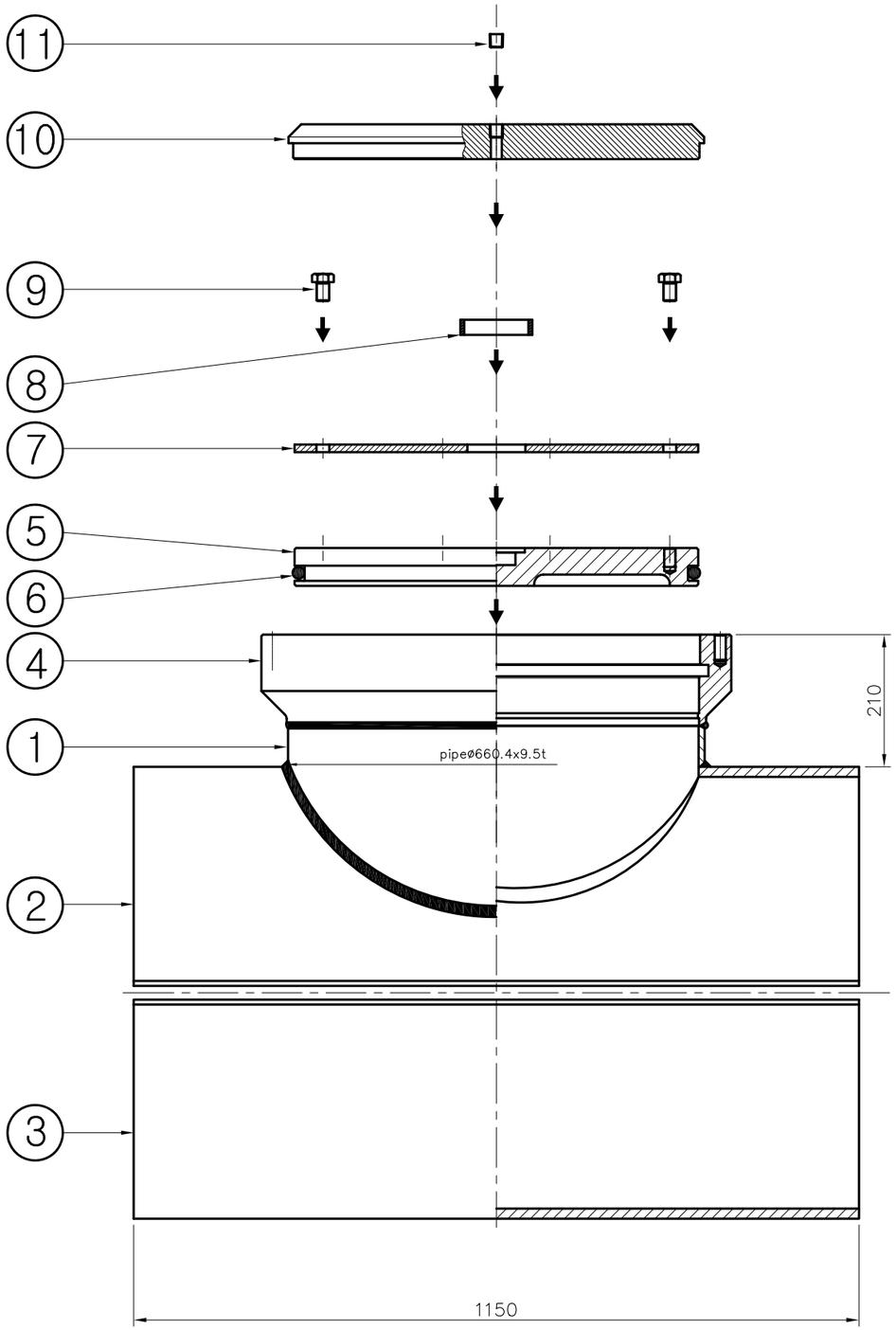

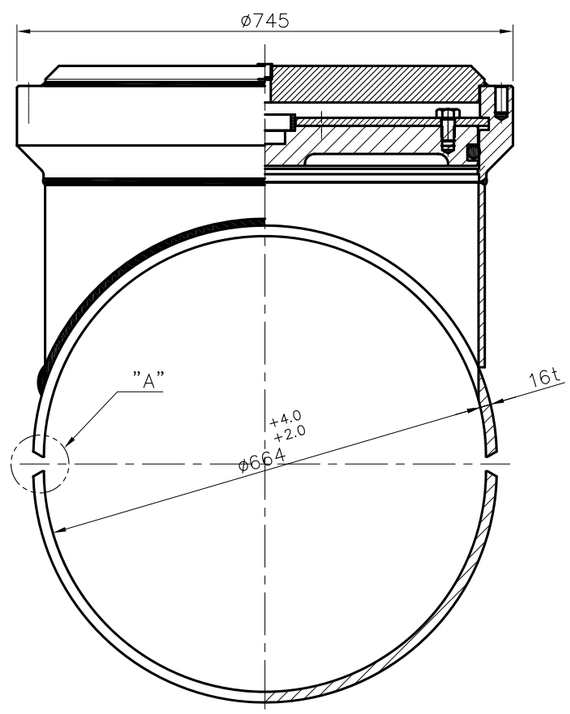

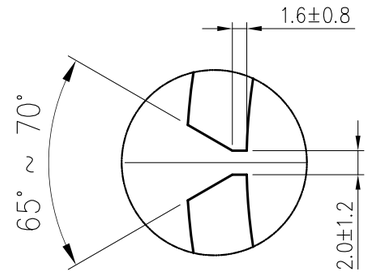

"A" DETAIL

DAE HO STOPPER IND.CO.LTD

ITEM NO.	DESCRIPTION	MATERIAL	Q'TY	SIZE
11	P.T PLUG	SCM440	1 EA	-
10	END CAP	A105 or SS275	1 EA	-
9	HEX-BOLT	SCM440	16 EA	M20 * 30(L)
8	RING	SPPS370 or SPP	1 EA	-
7	SEGMENT	SPHC / SS275	1 EA	-
6	O-RING	Viton	1 EA	-
5	L.O.R - PLUG	A105 or SS275	1 EA	-
4	HOLDER	A105 or SS275	1 EA	-
3	하부 PAD	SS275	1 EA	-
2	상부 PAD	SS275	1 EA	-
1	Branch Pipe	SS275 or SPW400	1 EA	-

Drawn	Design	Check	Approve

Project	Title
지역난방공사 STOPPLE FITTING	LAY OUT 650A * 150#

Scale	Unit	Date:	DWG. NO.
A3 1/9	1/1	14.08.16	DHC03-□□□□□□□□

NO.	REVISIONS	DATE	APPROVE	REMARK

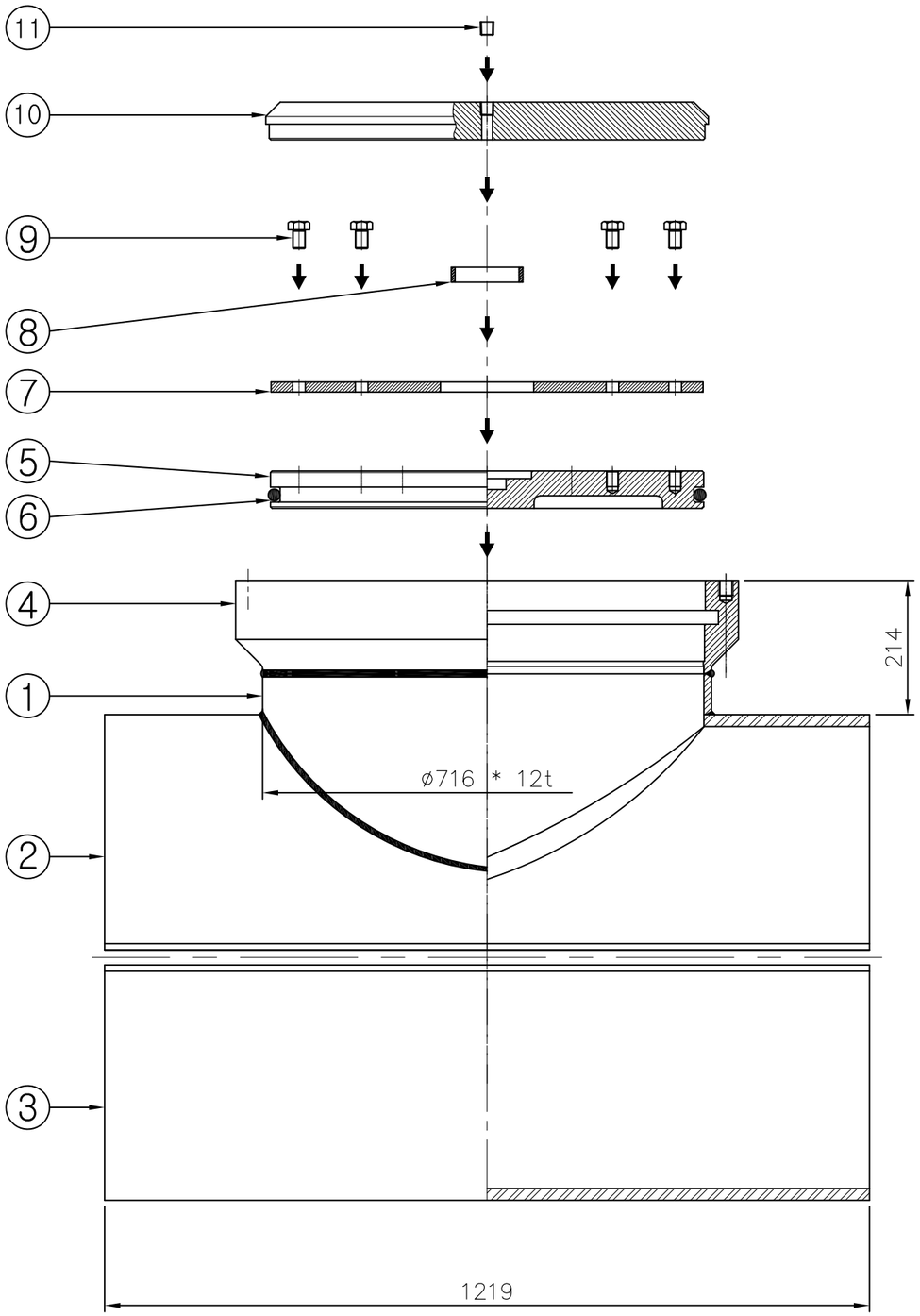

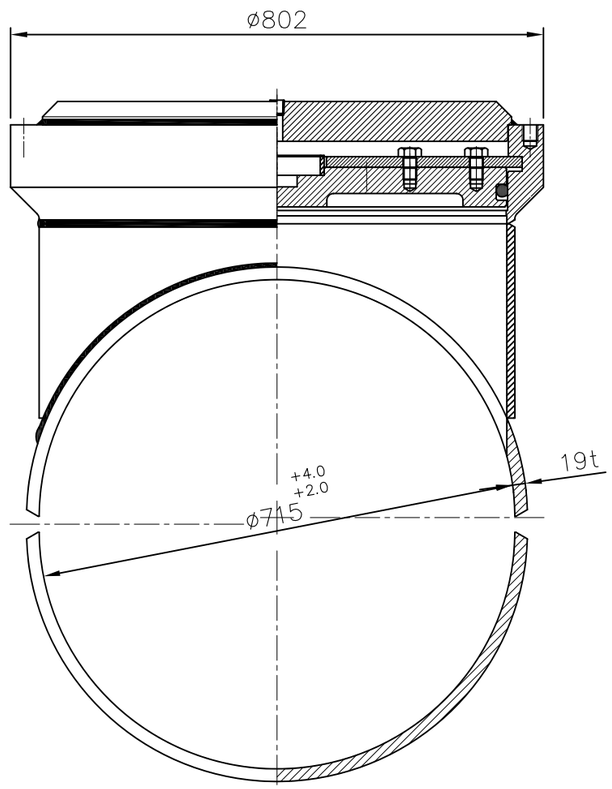

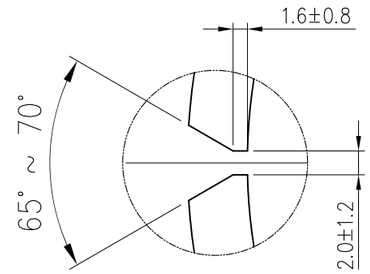

"A" DETAIL

DAE HO STOPPER IND.CO.LTD

ITEM NO.	DESCRIPTION	MATERIAL	Q'TY	SIZE
11	P.T PLUG	SCM440	1 EA	-
10	END CAP	A105 or SS275	1 EA	-
9	HEX-BOLT	SCM440	28 EA	M20 * 35(L)
8	RING	SPPS370 or SPP	1 EA	-
7	SEGMENT	SS275	1 EA	-
6	O-RING	Viton	1 EA	-
5	L.O.R - PLUG	A105 or SS275	1 EA	-
4	HOLDER	A105 or SS275	1 EA	-
3	하부 PAD	SS275	1 EA	-
2	상부 PAD	SS275	1 EA	-
1	Branch Pipe	SS275 or SPW400	1 EA	-

Drawn	Design	Check	Approve

Project	Title
지역난방공사 STOPPLE FITTING	LAY OUT 700A * 150#

Scale	Unit	Date:	DWG. NO.
A3 1/9	1/1	14.08.16	DHC03-□□□□□□□□

NO.	REVISIONS	DATE	APPROVE	REMARK

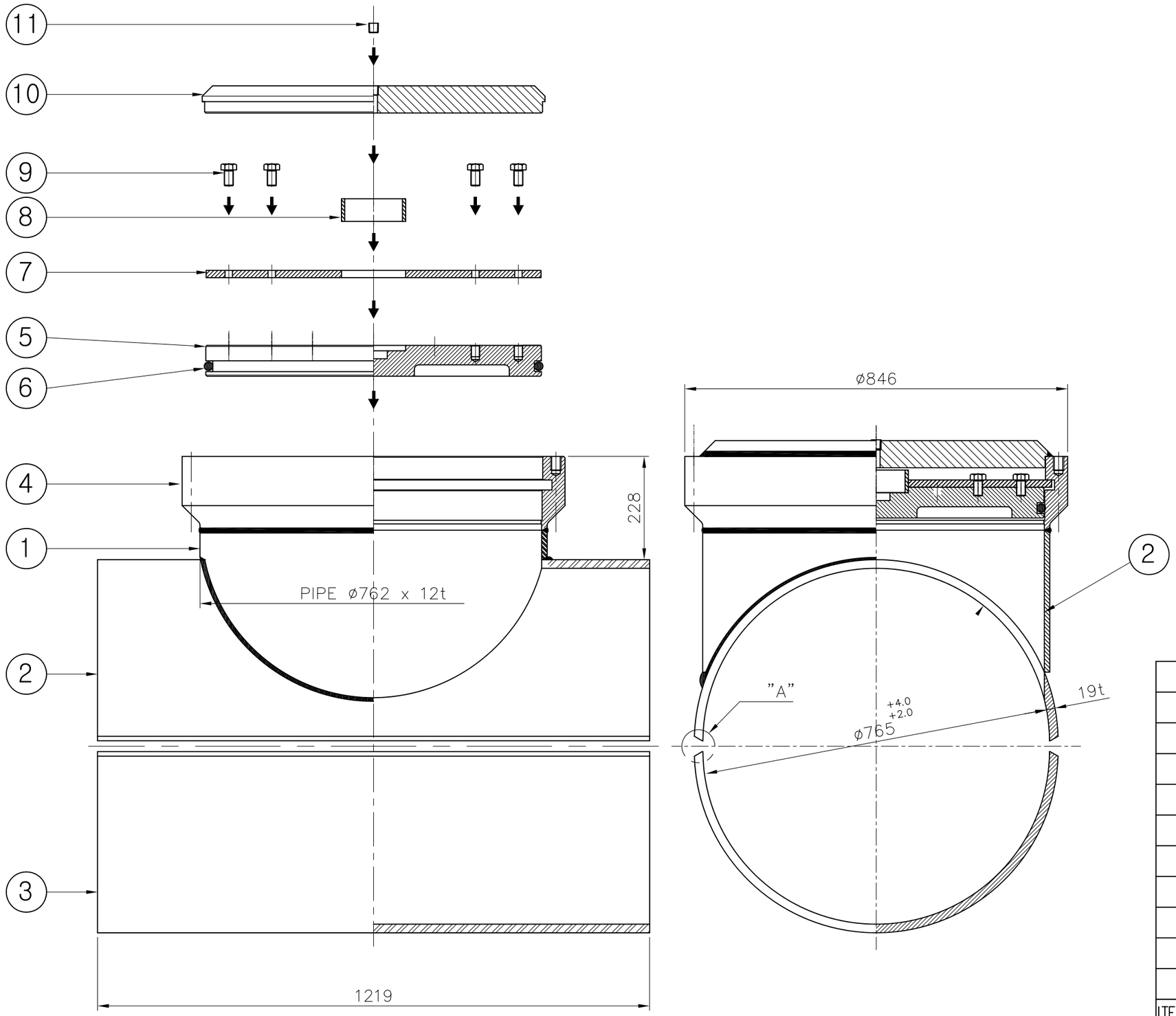

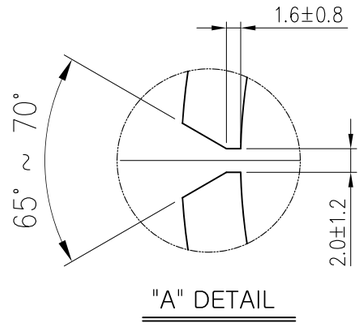

DAE HO STOPPER IND.CO.LTD

ITEM NO.	DESCRIPTION	MATERIAL	Q'TY	SIZE
11	P.T PLUG	SCM440	1 EA	-
10	END CAP	A105 or SS275	1 EA	-
9	HEX-BOLT	SCM440	24 EA	M20 * 35(L)
8	RING	SPPS370 or SPP	1 EA	-
7	SEGMENT	SS275	1 EA	-
6	O-RING	Viton	1 EA	-
5	L.O.R - PLUG	A105 or SS275	1 EA	-
4	HOLDER	A105 or SS275	1 EA	-
3	하부 PAD	SS275	1 EA	-
2	상부 PAD	SS275	1 EA	-
1	Branch Pipe	SS275 or SPW400	1 EA	-

Drawn	Design	Check	Approve

Project: 지역난방공사 STOPPLE FITTING

Title: LAY OUT 750A * 150#

Scale	Unit	Date:
A3 1/9	1/1	14.08.16

DWG. NO. DHC03-□□□□□□□□