THIS SOURCE DESCRIBES OPEN HARDWARE AND
IS LICENSED AS STATED ON THE COVER

M.2 Dual Key A+E Card with Mosaic-G5 GNSS Module

Low-power multi-band multi-constellation GNSS receiver

mosaic-G5

Advanced Navigation Solutions

PROJECT: M2_Mosaic-G5_Smart

VARIANT: [No Variations]

MODULE NOMENCLATURE: M.2 2230-D6*-E-A

* Bottom Ht: 0 mm

CHANGE LOG

FAB-REV.	ASM-REV.	DESCRIPTION	DATE	APPROVED
01	01	Inital Release	25.04.2025	Valaenthin T.

© 2025 ANavS GmbH

This source describes Open Hardware and is licensed under the CERN-OHL-P v2.

You may redistribute and modify this documentation and make products using it under the terms of the CERN-OHL-P v2 (https:/cern.ch/cern-ohl). This documentation is distributed WITHOUT ANY EXPRESS OR IMPLIED WARRANTY, INCLUDING OF MERCHANTABILITY, SATISFACTORY QUALITY AND FITNESS FOR A PARTICULAR PURPOSE. Please see the CERN-OHL-P v2 for applicable conditions.

UF1

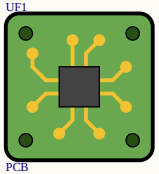

PCB
M2_Mosaic-G5_Smart_REV_01

Variant: [No Variations]

APPROVALS		DATE
ENG:	E. Daporta	17.04.2025
DSN:	E. Daporta	23.04.2025
CHK:	V. Tratter	25.04.2025

PROJECT: M2_Mosaic-G5_Smart

VARIANT: [No Variations]

ANavS GmbH
Gotthardstrasse 40
80686 München
Germany

TITLE: Cover_Page

SIZE	FILE NAME	FAB-REV	ASM-REV
A3	Cover_Page.SchDoc	01	01

SCALE: n.a. EXPORT DATE: 28.08.2025 SHEET 1 OF 3

THIS SOURCE DESCRIBES OPEN HARDWARE AND
IS LICENSED AS STATED ON THE COVER

M.2 Dual Key A+E Edge Connector

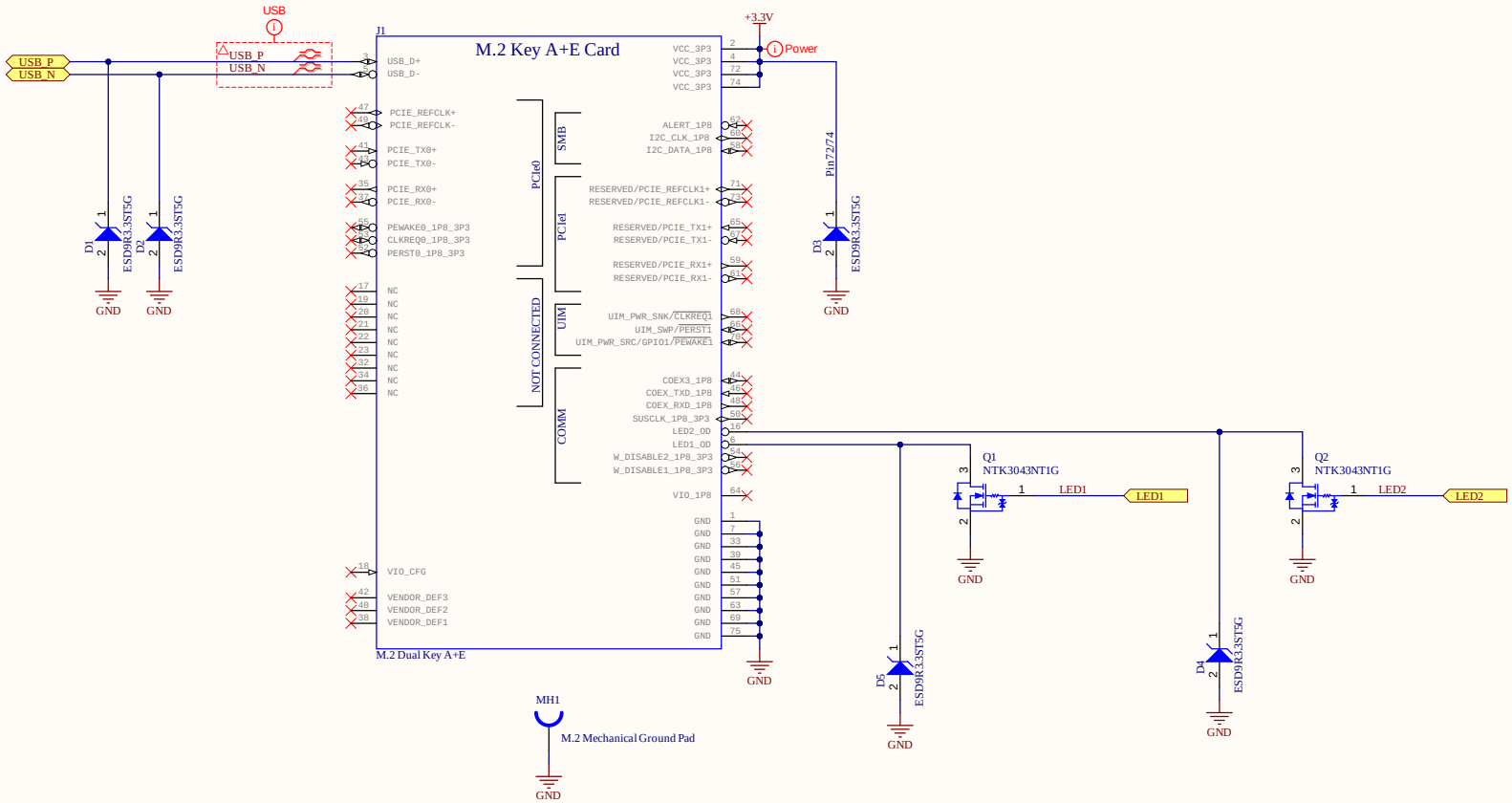

APPROVALS		DATE
ENG:	E. Daporta	17.04.2025
DSN:	E. Daporta	23.04.2025
CHK:	V. Tratter	25.04.2025

PROJECT: M2_Mosaic-G5_Smart

VARIANT: [No Variations]

ANavS GmbH
Gotthardstrasse 40
80686 München
Germany

TITLE: M.2_Key_A+E_Card

SIZE	FILE NAME	FAB-REV	ASM-REV
A3	M.2_Key_A+E_Card.SchDoc	01	01

SCALE: n.a. EXPORT DATE: 28.08.2025 SHEET 2 OF 3

THIS SOURCE DESCRIBES OPEN HARDWARE AND
IS LICENSED AS STATED ON THE COVER

Mosaic-G5

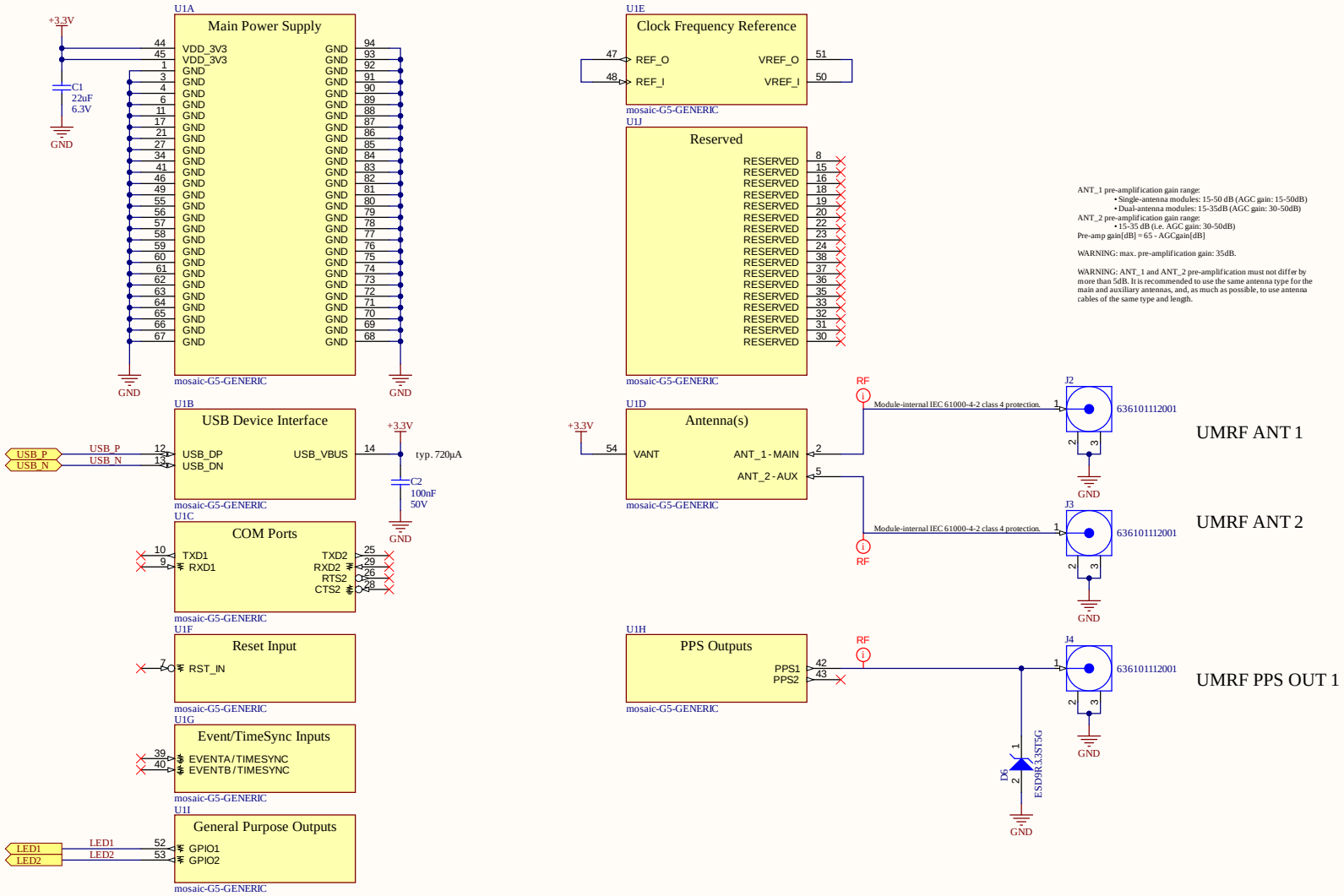

ANT_1 pre-amplification gain range:
- Single-antenna modules: 15-50 dB (AGC gain: 15-50dB)
- Dual-antenna modules: 15-35dB (AGC gain: 30-50dB)

ANT_2 pre-amplification gain range:
- 15-35 dB (i.e. AGC gain: 30-50dB)

Pre-amp gain[dB] = 65 - AGCgain[dB]

WARNING: max. pre-amplification gain: 35dB.

WARNING: ANT_1 and ANT_2 pre-amplification must not differ by more than 5dB. It is recommended to use the same antenna type for the main and auxiliary antennas, and, as much as possible, to use antenna cables of the same type and length.

APPROVALS		DATE
ENG:	E. Daporta	17.04.2025
DSN:	E. Daporta	23.04.2025
CHK:	V. Tratter	25.04.2025

PROJECT: M2_Mosaic-G5_Smart

VARIANT: [No Variations]

ANavS GmbH
Gotthardstrasse 40
80686 München
Germany

TITLE: Mosaic-G5

SIZE	FILE NAME	FAB-REV	ASM-REV
A3	Mosaic-G5.SchDoc	01	01

SCALE: n.a. EXPORT DATE: 28.08.2025 SHEET 3 OF 3