Review Paper : Adaptive Fuzzy Attention Inference to Control a Microgrid Under Extreme Fault on Grid Bus

Nama : Septian Feter Arifianto
NIM : 6022251072
Teacher : Muhammad Qomaruz Zaman, S.T., M.T., Ph.D.
Mata Kuliah : Kecerdasan Buatan Assigment 4
Class name : Kelas X

Authors : T. M. Mahim, A. H. M. A. Rahim, and M. M. Rahman
Years : 2025
Judul : Adaptive Fuzzy Attention Inference to Control a Microgrid Under Extreme Fault on Grid Bus
GitHub Link : `https://github.com/septianfeter-arifianto/assignment-4.git`
Coding Link : `https://editor.p5js.org/septianfeter-arifianto/sketches/hQj1CEWmv`

1. Resume from the journal

a. paragraph summary

This paper proposes an advanced intelligent control strategy for microgrid systems under extreme fault conditions using an integration of Adaptive Fuzzy Attention Inference (FAI) and Double Q-Learning (DQL). The study addresses critical issues in renewable-based microgrids such as voltage instability, power imbalance, and poor transient response due to high penetration of distributed generation (DG) units including photovoltaic (PV), wind turbines, fuel cells, and microalternators. The authors develop a comprehensive nonlinear dynamic model of the microgrid system and introduce a centralized control mechanism using a STATCOM coupled with capacitive energy storage. The FAI controller dynamically adjusts rule weights and membership functions using DQL, enabling adaptive real-time control under varying fault conditions. Simulation results demonstrate that the proposed method significantly outperforms traditional controllers such as PID, sliding mode control (SMC), and model predictive control (MPC), especially during severe grid faults (C1, C2, C3 scenarios). The system shows faster stabilization, reduced oscillations, and improved voltage recovery within 2.5 seconds.

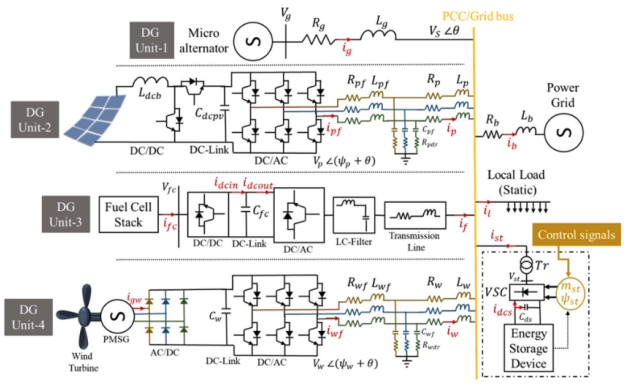

Figure 1: Microgrid test case system under investigation, consisting of multiple distributed generation units interconnected through a common point of coupling (PCC).

b. Purpose and scope

- To develop an adaptive intelligent control method for microgrid stability under extreme fault conditions
- To integrate fuzzy logic with reinforcement learning (DQL).
- To improve voltage stability, frequency control, and power sharing.

- To evaluate system performance under multiple fault scenarios (C1, C2, C3)

C. Functional definitions and assumptions

- Microgrid consists of multiple DG units (PV, Wind, Fuel Cell, Microalternator).
- STATCOM used for reactive power compensation
- Fault scenarios defined as: C1 = 0.7 pu(Mid Fault), C2 = 0.5 pu(Moderate Fault), and C3 = 0.0 pu (Severe Fault).
- System modeled using nonlinear state-space equations

2. Method (how the review was conducted)

The study uses a mathematical modeling + simulation-based approach.

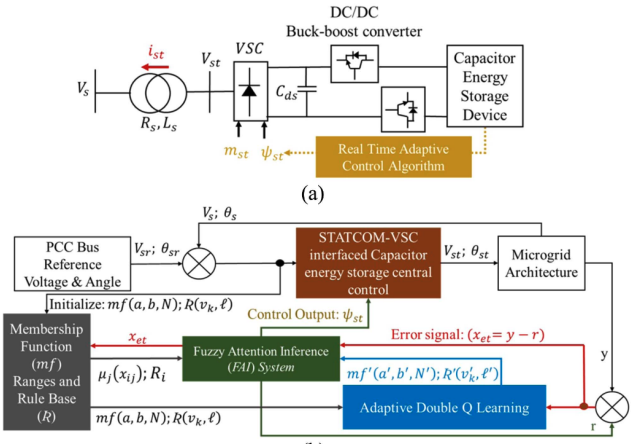

Figure 2: (a) STATCOM-based control system, and (b) proposed adaptive fuzzy attention inference (FAI) integrated with deep Q-learning (DQL).

3. Result

a. Comparison with earlier reviews

Earlier reviews typically focused either on classical AI in design (e.g., fuzzy/GA/ANN) or on modern data-driven approaches in narrow subdomains (civil/construction, structural, AM). This paper's novelty is its integrated perspective across both families, across all design stages, plus a selection flowchart, thus offering broader practical guidance than prior fragmented surveys.

b. Novelty

- Hybrid AI control: Fuzzy + Reinforcement Learning.
- Adaptive rule weighting.
- Real-time learning capability.
- Robust to extreme fault.

c. Analytic sensitivity

- The system performance is dependent on model parameters.
- It is sensitive to the configuration of distributed generation (DG) units.
- The performance is significantly affected by fault conditions.

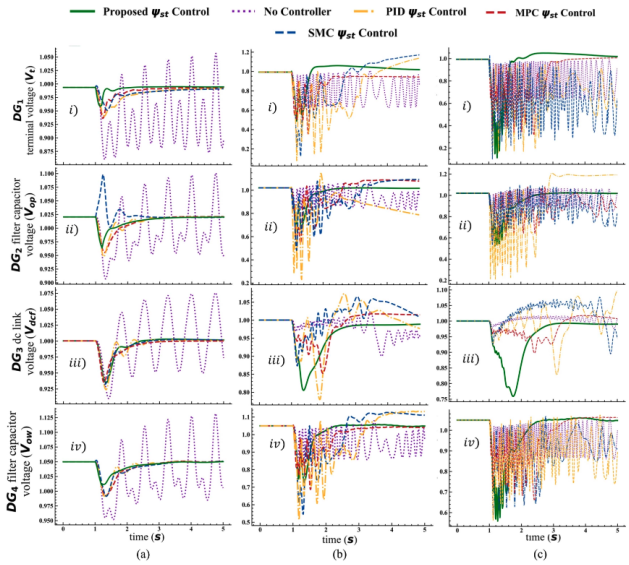

Figure 3: Dynamic response of the microgrid under different fault conditions (C1, C2, C3), showing improved voltage stability using the proposed FAI controller.

4. Limitations and potential biases

- High system complexity, posing challenges for real-time implementation.
- Lack of hardware-based validation or experimental testing.
- Strong dependence on model accuracy and assumptions.
- Simulations are limited to a Python-based environment using ODE solvers.

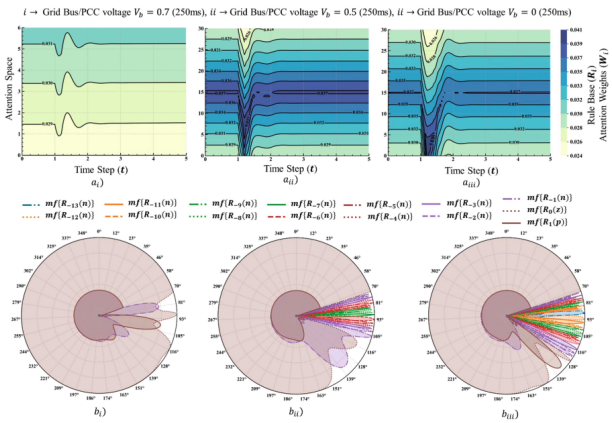

Figure 4: Adaptive behavior of the fuzzy inference system showing real-time adjustment of membership functions and rule base in response to system disturbances.

5. Implication

- Engineering Impapct applicable to : Smart Grid System, Renewable energy integration and Power system stability enchancement.
- Practical Insight : Suitable for systems with high fluctuations and uncertainties and Improves the reliability and resilience of microgrid operations.

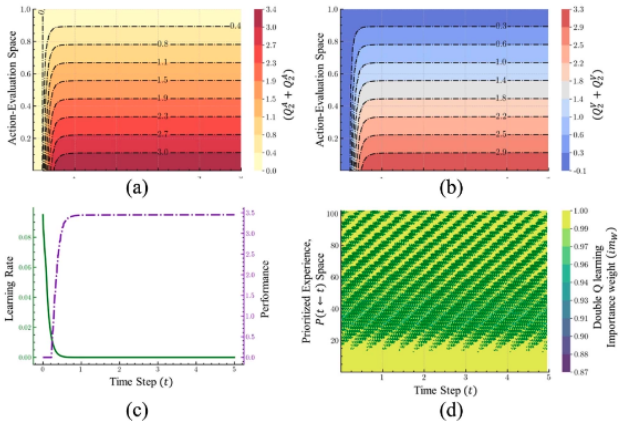

Figure 5: Deep Q-learning architecture illustrating the advantage and value streams, and its learning behavior for optimizing control decisions in the microgrid system.

6. Conclusion

The paper successfully demonstrates that integrating Adaptive Fuzzy Attention Inference with Double Q-Learning provides a powerful and robust solution for microgrid control under extreme fault conditions. The proposed controller significantly improves voltage stability, reduces oscillations, and ensures faster recovery compared to conventional methods. Despite its computational complexity, the method represents a major advancement in intelligent control systems for renewable-based power networks.