Adaptive Fuzzy Attention Inference to Control a Microgrid Under Extreme Fault on Grid Bus

Tanvir M. Mahim, *Student Member, IEEE*, A.H.M.A. Rahim, *Life Senior Member, IEEE*, and M. Mosaddequr Rahman, *Senior Member, IEEE*

***Abstract*—Power quality of a microgrid falls due to large penetration in renewable sources with rapid fluctuations. This article develops a double Q Learning (DQL) based adaptive fuzzy attention inference (FAI) to control a microgrid connected to the grid. Detailed dynamic modeling is presented with renewable sources such as photovoltaic (PV), wind, fuel, and microalternators with respective power electronics interfaces. The inference scheme controls the phase angle of the static compensator (STATCOM) coupled with capacitive energy storage device in the microgrid. STATCOM provides reactive power, while the capacitive storage corrects real power imbalances. Numerical results showed the developed control scheme restores stability rapidly in the event of severe symmetrical three-phase to ground fault on the grid bus. Rule base and corresponding membership function of the inference dynamically adapts based on the DQL mechanics. Prioritized experience and shallow neural net reward model are integrated where importance sampling of the temporal difference based rewards, contributes to overcome microgrid transients. The proposed control outperform conventional optimized proportional-integral-derivative (PID), model predictive, and sliding mode control schemes to restore normal operation of the converters across different levels of electromechanical transients.**

***Index Terms*—Capacitive energy storage, double Q learning (DQL), fuzzy attention inference (FAI), static compensator (STATCOM).**

NOMENCLATURE

δ, ω_0	Rotor angular position and base angular speed.
V_t, V_{tr}	Actual terminal and desired terminal voltage.
ψ_{st}	STATCOM phase angle (control signal).
Q^V, Q^A	Double Q network value and advantage.

I. INTRODUCTION

MICROGRIDS are low-cost power systems consisting distribution generation (DG) units. Renewable sources are gaining popularity due to environmental, economical, and technological advances [1], [2], [3], with a focus on local delivery. Small-scale generators linked to utilities transmit power and provides local loads during grid outages [4], [5], [6]. The DG sources include photovoltaic (PV), fuel cells, wind systems, and micro alternators. Large participation of renewable energy sources and storage, impacts system stability and it is crucial to model microgrid framework for effective power management concerning fluctuations in DG units voltage swings and overvoltage surges [7], [8]. To address these problems, energy storage devices, such as capacitors, magnetic-storage systems, flywheels, batteries, and power electronic equipment like static compensator (STATCOM), assist balance reactive-real power during transients [9], [10], [11]. A microgrid consists of rotating-type DGs and inverter type DGs, which require power electronic converters regarding their connection to the grid [12].

Sun et al. [13] proposed a microgrid controller with rule-based dispatch that adjusts different configurations and operation modes. The authors utilized dispatch principles to balance total power, track grid power import/export, minimize renewable generation fluctuations, and reduce energy storage losses. Tu et al. [14] developed a privacy-preserving distributed average observer based strong consensus with the state decomposition method to maintain privacy. The results showed observer does not require knowledge of the reference signal and provides accurate-smooth estimation, for microgrid control. Fazal et al. [15] concluded control-schemes, such as cooperative distributed techniques and consolidation of traditional hierarchical control into fewer layers to applications and operation, necessitate a thorough study focus. Lv et al. [16] proposed an integrated Q-learning to evaluate the battery management strategy for energy trading in the microgrid. Authors reduced the cost and maintained the battery's performance, that resulted in good service life. Tong et al. [17] developed an adaptive frequency control strategy for regulating the governor and energy storage to achieve microgrid frequency recovery under stochastic uncertainty. To address the energy storage control requirements, they developed an integral reinforcement learning method. Yang et al. [18] designed a fuzzy switching-type state-false data injection estimation and attack compensation control for dc microgrid systems that are exposed to hybrid denial-of-service attacks. They proposed a method of fuzzy state-false data injection estimation and attack compensation control using a convex optimization strategy. Cui et al. [19] developed a fuzzy predefined-time control for a collection of switched nonlinear systems with several failures. To address the singularity problem, they designed a continuous piecewise predefined-time controller with a fault-tolerant compensation mechanism based on switching and fuzzy logic. A microgrid connects to the main grid, which defines the voltage and frequency to be maintained across DGs. It acts as a controllable load or source, absorbing or injecting electricity into the main grid based on the power differential. DG units supply all or part of

Received 25 November 2024; revised 22 January 2025; accepted 4 February 2025. Date of publication 6 February 2025; date of current version 4 June 2025. This work was supported by the Department of Electrical and Electronic Engineering, BRAC University. Recommended by Associate Editor D. Wu.*(Corresponding author: Tanvir M. Mahim.)*

The authors are with the Department of Electrical and Electronic Engineering, BRAC University, Dhaka 1212, Bangladesh (e-mail: tanvir.mahim@bracu.ac.bd; abu.hamed@bracu.ac.bd; mosaddeq@bracu.ac.bd).

Digital Object Identifier 10.1109/TFUZZ.2025.3539325

1941-0034 © 2025 IEEE. All rights reserved, including rights for text and data mining, and training of artificial intelligence and similar technologies. Personal use is permitted, but republication/redistribution requires IEEE permission. See https://www.ieee.org/publications/rights/index.html for more information.

Authorized licensed use limited to: Institut Teknologi Sepuluh Nopember. Downloaded on March 27,2026 at 13:55:18 UTC from IEEE Xplore. Restrictions apply.

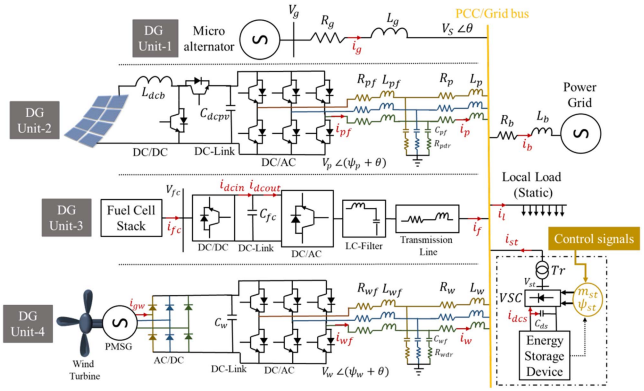

Fig. 1. Microgrid test case system under investigation.

the load which brings the challenges of energy security, quality, reactive power support, and power flow control. The difficulties that arise in an electrical microgrid with renewable DGs are the unpredictable fluctuation of renewable-power output, inefficient power sharing, voltage, and frequency management. This necessitates the control-scheme resiliency to numerous contingencies that arise in a power system during regular or abnormal operations. The storage device is desired to be used as a dispatchable DG source, rapidly swapping power with the utility grid.

Based on the explanation above, it is clear that there is a substantial research gap in overcoming the power quality issue that arise in microgrid due to real-reactive power imbalances across multiple DG units on the grid bus. Main contribution of this study is divided into threefolds.

1) Dynamic mathematical framework of a microgrid test case with DGs is derived with respective state variables and control parameters.
2) Next, adaptive fuzzy attention inference (FAI) control-scheme on phase angle of STATCOM capacitor energy storage device is developed.
3) The FAI is adapted with double Q learning (DQL), where prioritized experience and shallow neural net reward model are formulated, providing fast response-ability to the proposed control scheme.

The rest of this article is organized as follows: Section II derives the problem formulation, Section III develops the theoretical design of the proposed control algorithm, Section IV presents the numerical investigation. Finally, Section V concludes this article.

II. Problem Formulation: Microgrid Preliminaries

Consider a dynamic scheme with DGs: microturbine-synchronous generator, PV, fuel cell, and permanent-magnet-synchronous generator (PMSG) wind turbine, respectively (see Fig. 1). Central managerial control to coordinate power flow among DGs is considered. The controller is modeled with capacitor energy storage interfaced through a STATCOM voltage source converter (VSC). Here, we considered static local load, where DG units produces electrical power operating in synchronicity with each other to supply local load or deliver power over the grid bus line. The variation (dynamic) in local load is handled by the generators during normal operation or at the event of grid faults.

A. Microalternator (DG Unit-1) Characteristics and Assumptions

The microalternator in Fig. 1 is modeled with third-order dynamics. It represents rotor motion with the field flux decay [20]. The equation for synchronous machine rotor motion is based on a fundamental assumption in dynamics, which is accelerating torque equals the product of the rotor's moment of inertia and angular acceleration. To calculate power, multiply both sides of the torque equation by the rotor's angular velocity. To normalize the power equation, divide by base power and convert mechanical variables to electrical values. This produces the electromechanical swing equation, which applies to rotor motion

$$\frac{2H}{\omega_0}\frac{d\delta^2}{dt^2} = (P_m - P_e)\,. \tag{1}$$

Here, δ, ω_0, H, P_m, and P_e are rotor angular positions about a synchronous rotating frame, normalized inertia constant, mechanical input power to the generator (assumed constant at transient period), and electrical power output expressed as synchronous generator's voltage and current, respectively. The swing relationship in (1) is derived into two first-order differentials where δ and ω (per unit rotor angular speed) are state variables given in (i) and (ii) (see Table I). The differential equation for the field circuit in (iii) is derived by applying Kirchhoff's voltage law (KVL) to the field circuit of the generator. Field flux linkage in the d-axis and internally generated voltage e'_q is expressed along the q-axis, where T'_{d0} open circuit field time constant (ratio of inductance to the resistance of field circuit). A detailed list of variables is given in nomenclature. The IEEE type-ST exciter with time T_A and gain K_A constant is considered. It affects the change in excitation voltage E_{fd} from nominal value E_{fd0} concerning the terminal voltage V_t change from threshold V_{tr} resulting in the dynamic mathematical framework of the exciter driven in (iv).

B. PV and Fuel Cell (DG Unit-2,3) Characteristics and Assumptions

The PV and fuel cell schemes in Fig. 1 utilize power electronic interfaces such as a dc/dc converter, dc-link capacitor, inverter, and LC filter [21]. The dc/ac converter affects the PV and fuel cell voltage and injects it toward the grid. To avoid resonance between the filter capacitor and coupling inductance, series resistance R_{pdr} is used with the filter capacitor. The PV cell IV characteristic is given as [22]

$$i_{\text{pv}} = i_{ph} - i_{p0}\left[e^{q\left(\frac{V_{\text{pv}} + i_{\text{pv}} R_s}{nkT}\right)} - 1\right]. \tag{2}$$

Here, $i_{\text{pv}}, V_{\text{pv}}, i_{ph}, i_0, n, k, q, R_s$, and T are cell current, voltage, light-induced, diode saturation current, ideality factor, Boltzmann constant, the charge of an electron, series resistance, and junction temperature, respectively. The differential formulation in (v) is derived by KVL for the current received by the dc/dc converter, where Ldc and dc are the dc/dc converter inductance and duty cycle, respectively. The dc-link capacitor voltage in (vi) is derived from Kirchhoff's current law (KCL), where idc1 and idc2 are currents at both sides of the capacitor. The $i_{\text{dc1}} = (1 - d_c)i_{\text{pv}}$ and $idc2 = -[i_{pfd} \cdot m_p \cdot \cos(\psi_p + \theta) + i_{\text{pfd}} \cdot m_p \cdot \sin(\psi_p + \theta)]$. Next, the d–q components of the filter capacitor voltage are given in (vii) and (viii).

Authorized licensed use limited to: Institut Teknologi Sepuluh Nopember. Downloaded on March 27,2026 at 13:55:18 UTC from IEEE Xplore. Restrictions apply.

TABLE I
MATHEMATICAL FRAMEWORK OF THE MICROGRID SYSTEM WITH RENEWABLE SOURCES

DGs	Differential Equations	State Variables
Microalternator (DG Unit-1)	$i.\ \frac{d\delta}{dt} = \omega_0(\omega - 1)$; $ii.\ \frac{d\omega}{dt} = \frac{1}{2H}(P_m - P_e)$; $iii.\ \frac{de'_q}{dt} = \frac{1}{T'_{d0}}\left[E_{fd} - e'_q - (x_d - x'_d)\, i_d\right]$; $iv.\ \frac{dE_{fd}}{dt} = \frac{1}{T_A}\left[K_A\left(V_{\text{ref}} - V_t\right) - (E_{fd} - E_{fd0})\right]$	$X_{MA} = [\delta, \omega, e'_q, E_{fd}]$
PV (DG Unit-2)	$v.\ \frac{di_{pv}}{dt} = \frac{1}{L_{dc}}\left[V_{\text{pv}} - (1 - \text{dc})\, V_{\text{dc}}\right]$; $vi.\ \frac{dV_{\text{dc}}}{dt} = \frac{1}{C_{dc}}\left(i_{\text{dc1}} + i_{\text{dc2}}\right)$; $vii.\ \frac{dV_{cd}}{dt} = \frac{1}{C_{pf}}\left(i_{pfd} - i_{pd}\right) + \omega\omega_0 V_{cq}$; $viii.\ \frac{dV_{cq}}{dt} = \frac{1}{C_{pf}}\left(i_{pfq} - i_{pq}\right) + \omega\omega_0 V_{cd}$	$X_{PV} = [i_{pv}, V_{dc}, i_{pfd}, i_{pfq}, i_{pd}, i_{pq}, V_{cpd}, V_{cpq}]$
Fuel Cell (DG Unit-3)	Diff. eqn's are identical to PV with the change in the subscript as $(\text{pv} \rightarrow fc/p \rightarrow f)$ of the state variables.	$X_{FC} = [i_{fc}, V_{dcfc}, i_{ffd}, i_{ffq}, i_{fd}, i_{fq}, V_{cfd}, V_{cfq}]$
PMSG Wind Turbine (DG Unit-4)	$ix.\ \frac{di_{gd}}{dt} = \frac{\omega_0}{x_{dw}}\left(-r_a i_{gd} + \omega x_{qw} i_{gd} - V_{gd}\right)$; $x.\ \frac{di_{gq}}{dt} = \frac{\omega_0}{x_{qw}}\left(-r_a i_{gq} - \omega x_{dw} i_{gd} - V_{gq}\right)$; $xi.\ \frac{d\theta_s}{dt} = \omega_0(\omega_t - \omega_w)$; $xii.\ \frac{d\omega_t}{dt} = \frac{1}{2H_t}(P_{mv} - K_s\theta_s)$; $xiii.\ \frac{d\delta_w}{dt} = \omega_0(\omega_w - 1)$; $xiv.\ \frac{d\omega_w}{dt} = \frac{1}{2H_g}(K_s\theta_s - P_{ew})$; $xv.\ \frac{dV_{dcw}}{dt} = \frac{1}{C_w}[m_{wr}\sin\delta_w i_{gd} + m_{wr}\cos\delta_w i_{gq} - m_{wi}\cos(\psi_{wi} + \theta)\, i_{wd} - m_{wi}\sin(\psi_{wi} + \theta)\, i_{wq}]$	$X_W = [\theta_s, \omega_t, \delta_w, \omega_w, i_{gwd}, i_{gwq}, V_{dcw}, i_{wfd}, i_{wfq}, i_{wd}, i_{wq}, V_{cwd}, V_{cwq}]$

For the fuel cell stack or proton exchange membrane fuel cell (PEM-FC) [23] in Fig. 1, the magnitude of controlled voltage is derived as

$$E = E_{\text{oc}} - NAln\left(\frac{i_{fc}}{i_{f0}}\right)\frac{1}{s\frac{T_d}{3} + 1};\quad V_{fc} = E - R_{\text{ohm}} i_{fc}. \tag{3}$$

Here, $E_{\text{oc}}, N, A, i_0, R_{\text{ohm}}, T_d, i_{fc}$, and v_{fc} are open circuit voltage, the number of series connected cells, and tafel slope, exchange current, internal resistance, response time, and fuel cell stack current and voltage, respectively. The differential equations for the fuel cell stack are similar to the PV model and the corresponding state variables.

C. PMSG Wind Turbine (DG Unit-4) Characteristics and Assumptions

The wind turbine model in Fig. 1 includes equations of the turbine generator, two mass drive trains, synchronous generator, full frequency converter, and output *LC* filter. The mathematical framework of the wind turbine model includes differential equations in terms of *d*–*q* components for generator armature currents (i_{gd}, i_{gq}), two mass drive train electromechanical relationships of torsional angle (θ_s), turbine speed (ω_t), generator rotor angle (δ_w), and generator speed (ω_w) are derived in (ix)–(xiv), respectively. Next, in (xv) the dc-link capacitor voltage formulation is derived from power balances.

D. Composite Model of the Microgrid Test-Case Under Consideration

The multiple DG based composite microgrid model, given in Fig. 1 has power electronic circuitry, such as VSC and *LC* output filters, and connects renewable energy systems including solar, fuel cell, and wind generation. Loads on the common bus are also considered. This study uses a capacitor energy storage device interfaced with a STATCOM-VSC as central control to address transients. By applying KCL to the microgrid architecture (see Fig. 1), a composite state space framework is achieved. According to KCL, the input currents at the point of common coupling (PCC) bus are equivalent to the outgoing currents, which are derived as follows:

$$i_g + i_p + i_f + i_w + i_{st} = i_b + i_l. \tag{4}$$

Equation (4) is broken into *d*–*q* terms in the following:

$$i_{gd} + i_{pd} + i_{fd} + i_{wd} + i_{std} = i_{bd} + i_{ld} \tag{5}$$

$$i_{gq} + i_{pq} + i_{fq} + i_{wq} + i_{stq} = i_{bq} + i_{lq}. \tag{6}$$

Next at the PCC/grid bus, the load current i_l is expressed as admittance $i_l = V_s \cdot Y$.

$$i_{ld} + ji_{lq} = (V_{sd} + jV_{sq})(g - jb) \tag{7}$$

$$i_{ld} = gV_{sd} + bV_{sq};\quad i_{lq} = gV_{sq} + bV_{sd}. \tag{8}$$

Now, current traversing to the utility setup i_b is derived as

$$i_b = \frac{V_s - V_b}{R_b + jX_b} \tag{9}$$

$$i_{bd} + ji_{bq} = \frac{V_{sd} + jV_{sq} - (V_b\sin\delta + jV_b\cos\delta)}{R_b + jX_b}. \tag{10}$$

The *d*–*q* components in (11) and (12) are obtained by equating real and imaginary parts of (10),

$$i_{bd} = \frac{(V_{sq} - V_b\sin\delta)R_b + (V_{sq} - V_b\cos\delta)X_b}{{R_b}^2 + {X_b}^2} \tag{11}$$

$$i_{bq} = \frac{(V_{sq} - V_b\cos\delta)R_b + (V_{sq} - V_b\sin\delta)X_b}{{R_b}^2 + {X_b}^2}. \tag{12}$$

To produce the mathematical microgrid model (see Appendix B), (13) and (14) are substituted for the microgrid bus voltage components in the differential equations of different component models (DGs)

$$V_{sq} = D(i_{pd} + +i_{fd} + i_{wd} + i_{std}) + Ee_q{}' + F(i_{pq} + i_{fq} + i_{wq} + i_{stq}) + GV_b \tag{13}$$

$$V_{sd} = \frac{1}{A}[Z_bZ_1(i_{pd} + +i_{fd} + i_{wd} + i_{std}) + Z_bX_2e_q{}' + V_bZ_1\left(R_b\sin\delta + X_b\cos\delta\right) - BV_{sq}] \tag{14}$$

$$\frac{dX}{dt} = f(X, u). \tag{15}$$

The state and corresponding control vector is derived as

$$X = [X_{\text{MA}}, X_{\text{controller}}, X_{\text{PV}}, X_W, X_{\text{FC}}]. \tag{16}$$

Authorized licensed use limited to: Institut Teknologi Sepuluh Nopember. Downloaded on March 27,2026 at 13:55:18 UTC from IEEE Xplore. Restrictions apply.

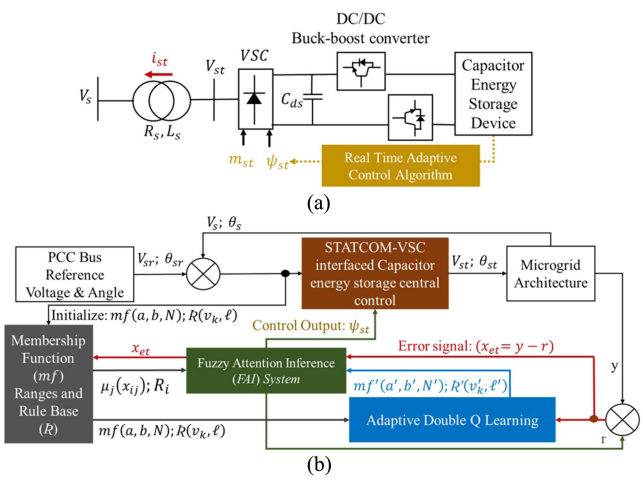

Fig. 2. (a) STATCOM-VSC interfaced capacitor energy storage central control scheme. (b) Block diagram of the proposed adaptive control framework.

The nonlinear state variable mathematical framework of (16) is derived in Table I. Next, the control vector is derived as

$$u = [u_{\text{controller}}, u_{\text{PV}}, u_W, u_{\text{FC}}] \tag{17}$$

$$u_{\text{Controller}} = [m, \psi]; \quad u_{PV} = [m_{\text{pv}}, \psi_{\text{pv}}] \tag{18}$$

$$u_W = [m_{wr}, m_{wi}, \psi_{wi}]; \quad u_{FC} = [m_{fc}, \psi_{fc}] \tag{19}$$

where m and ψ are the modulation index and phase angle of the respective DGs and control parameters of the microgrid test-case architecture under consideration. In the next section, the controller is discussed based on the derived microgrid state and control vectors.

III. Design of an Adaptive Control Scheme

Microgrids require voltage and frequency control to avoid voltage collapse or unstable operation due to input and load fluctuations. Control methods are required to handle transient behavior and maximize renewable power. A real-time adaptive control scheme is developed in this section.

A. Controller Preliminaries

The microgrid system's central controller is a capacitor energy storage device, with a STATCOM VSC given in Fig. 2(a).

The STATCOM changes the modulation index (m_{st}) of the VSC to balance reactive power, and the storage capacitor adjusts the voltage phase angle (ψ_{st}) of the converter for real power. Normalizing the voltage-current relationship, the STATCOM current i_{st} d–q terms is derived as

$$\frac{di_{std}}{dt} = -\frac{\omega_0 R_s}{L_s} i_{std} + \omega_0 \omega i_{stq} + \frac{\omega_0 m_{st} V_{\text{dc}} \cos(\psi_{st} + \theta)}{L_s} + \frac{\omega_0 V_{std}}{L_s} \tag{20}$$

$$\frac{di_{stq}}{dt} = -\frac{\omega_0 R_s}{L_s} i_{stq} - \omega_0 \omega i_{std} + \frac{\omega_0 m_{st} V_{\text{dc}} \sin(\psi_{st} + \theta)}{L_s} - \frac{\omega_0 V_{stq}}{L_s}. \tag{21}$$

The storage system power balance formulation for dc-link capacitor voltage is given as

$$\frac{dV_{ds}}{dt} = -\frac{1}{C_{ds}} (i_{\text{std}} m_{st} \cos\psi_{st} + i_{\text{stq}} m_{st} \sin\psi_{st}) + \frac{i_{ds}}{C_{ds}}. \tag{22}$$

In (22), C_{ds} and ids are the capacitance of the VSC and current by the storage capacitor, respectively. The microgrid's load is centered at a single node, which is assumed to consist of R and L elements. Fig. 2(b) depicts the control flow diagram which is based on a FAI system including an adaptive DQL algorithm. The FAI consists of Gaussian membership functions with corresponding rule bases. The membership function (mf's) ranges and rule base ($\mathcal{R}$) are designed symmetrically around zero which takes in the generator (microalternator, DG_1) error state (deviation of the angular speed from stability, x_{et}),

$$x_{et} = \omega_0 - \omega_{\text{DG}_1}. \tag{23}$$

The mf's conditions are derived as

$$mf(i) \begin{cases} R_i(n); & tb + (t+1)a < i(b-a) < ib + (1-t)a \\ \vdots & \\ R_{-2}(n); & -(2b-a) < -2(b-a) < -(2b-3a) \\ R_{-1}(n); & -b < -(b-a) < -(b-2a) \\ R_0(z); & -a < 0 < a \\ R_1(p); & b - 2a < b - a < b \\ R_2(p); & 2b - 3a < 2(b-a) < 2b - a \\ \vdots & \\ R_i(p); & tb - (1+t)a < t(b-a) < tb - (t-1)a \end{cases} \tag{24}$$

where a is the initial $mf[R_0(z)]$ spread by which the symmetry is maintained and $b = (2a)$, for $i = 0, \pm 1, \pm 2, \ldots. \pm N$, respectively. The $\mathcal{R}$ derived as

$$\mathcal{R} \begin{cases} R_i(n); & -\nu_k + (t+1)l \\ \vdots & \\ R_{-2}(n); & -\nu_k - l \\ R_{-1}(n); & -\nu_k \\ R_0(z); & 0 \\ R_1(p); & \nu_k \\ R_2(p); & \nu_k + l \\ \vdots & \\ R_i(p); & \nu_k + (t-1)l \end{cases} \tag{25}$$

where ν_k is the associated weight of each rule (R_i). Initially, for the test case architecture a, N, l, and ν_k are set to $0.02, 5, 0.2$, and 0.4 by the PCC bus reference input, respectively. The rule base weights are gradually distributed centering around the zero rule $(R_0(z)) = 0$ at the initialization stage. The inference system outputs are affected by the attention mechanism, which assigns attention weights based on the relevancy of each rule in the rule base in response to the error signal. The range of the membership functions and rule base weights are adapted in real-time (i.e.: a, b, N, l, ν_k) based on the error signal received by the adaptive DQL framework.

Authorized licensed use limited to: Institut Teknologi Sepuluh Nopember. Downloaded on March 27,2026 at 13:55:18 UTC from IEEE Xplore. Restrictions apply.

B. Formulation of the FAI

The FAI system is designed to take the error signal and calculate the membership degree as given in (26) and (27). Consequently, the controller output is produced by the FAI system rule-based evaluation derived in (28).

$$\mu\left(x_{et}, c_{At}, \sigma_t\right) = e^{-\frac{1}{2}\left(\frac{x_{et}-c_{At}}{\sigma_t}\right)^2};$$
$$\sigma_t = \frac{2a}{3}; \quad c_{At} = t\left(b-a\right) \tag{26}$$

$$\mu_t(x_{et}) = \mu(x_{et}, c_{At}, \sigma_t) \tag{27}$$

$$\psi_{st} = \frac{\sum_{i=1}^{N}\left(\prod_{t=1}^{M}\mu_i\left(x_{et}\right)\right)w_i R_i}{\sum_{i=1}^{N}\left(\prod_{t=1}^{M}\mu_i\left(x_{et}\right)\right)w_i}. \tag{28}$$

Here, $x_{et}, c_{At}, \sigma_t, N, M, \mu_i(x_{et}), w_i$, and R_i are error inputs, mean of the mf's, standard deviations, number of rules, number of inputs, mf's value for ith rule and input at time t, attention weight, and rule base weight for ith rule, respectively. The attention mechanism extracts the fuzzy mf's values: $mf(x_{et}) = \{mf_{i1}, mf_{i2}, \ldots\ldots, mf_{ij}\}$ and computes the respective peak values: $pk_i = \{pk_{i1}, pk_{i2}, \ldots\ldots, pk_{ij}\}$ evaluating the rules which give attention over the impact on ψ_{st} is derived as

$$R_i = \sum_{t=1}^{M}|pk_{it} - x_e|. \tag{29}$$

Next, using (29) the normalized attention weights are derived in the following:

$$w_i = \frac{e^{-R_i}}{\sum_{i=1}^{N}\left(e^{-R_i}\right)}. \tag{30}$$

Thereby using (26)–(30) the FAI system infers the output of the controller ψ_{st}. The FAI system's parameter weights $mf'(a', b', N')$ and $\mathcal{R}'(l', \nu'_k)$, [see Fig. 2(b)] adapted based on the adaptive DQL algorithm. In this regard, the superscript (') denotes the next state of a variable.

C. Formulation of the Adaptive DQL Framework

The adaptive DQL is a reinforcement framework. We implemented a temporal difference (td) Q-learning architecture where the value (Q^V) and advantage (Q^A) streams are evaluated separately. which is derived as

$$Q_i^V\left(S_t\right) \leftarrow Q_i^V\left(S_t\right) + \alpha \cdot t_{d_i} \tag{31}$$

$$Q_i^A(S_t, A_t) \leftarrow Q_i^V\left(S_t, A_t\right) + \alpha \cdot t_{d_i}. \tag{32}$$

Here, $i \in \{1, 2\}$ is selected randomly regarding Q table updates, where the state is represented as $S_t = x_{et}$ and the action space (i.e.: $A_t = [a_1 a_2 a_3 a_4]^T$) is derived as

$$W(A_t, S_t) = \begin{cases} \begin{bmatrix} a' : a + \eta_a|x_{et}| \\ b' : b + \eta_b|x_{et}| \\ N' : N + \eta_N|x_{et}| \end{bmatrix}, & \text{if action: } a_1 \\ \begin{bmatrix} a' : a - \eta_a|x_{et}| \\ b' : b - \eta_b|x_{et}| \\ N' : N - \eta_N|x_{et}| \end{bmatrix}, & \text{if action: } a_2 \\ \begin{bmatrix} l' : l + \eta_l|x_{et}| \\ \nu'_k : \nu_k + \eta_{\nu_k}|x_{et}| \end{bmatrix}, & \text{if action: } a_3 \\ \begin{bmatrix} l' : l - \eta_l|x_{et}| \\ \nu'_k : \nu_k - \eta_{\nu_k}|x_{et}| \end{bmatrix}, & \text{if action: } a_4 \end{cases} \tag{33}$$

here the actions are corresponded to the weight matrices of the FAI mechanics, where the actions taken by the dynamic Q-learning framework updates the respective weights given in (24) and (25). Next, the temporal difference t_{d_i} is derived as

$$t_{d_{i=1}} = r_t + \gamma \cdot Q_2^A\left(S'_t, \arg\max_{A'_t \in \mathbb{A}} Q_1^A(S'_t, A'_t)\right) - Q_1^A(S_t, A_t) \tag{34}$$

$$t_{d_{i=2}} = r_t + \gamma \cdot Q_1^A\left(S_t, \arg\max_{A'_t \in \mathbb{A}} Q_2^A(S'_t, A'_t)\right) - Q_2^A(S_t, A_t). \tag{35}$$

Here, α_l, γ, r_t, and $\mathbb{A}$ are learning rate, discount factor, reward regarding action A_t taken for state S_t and action domain set, respectively. In (33) $\eta_a, \eta_b, \eta_N, \eta_l$, and η_{ν_k} uses the mean $(\mu_{Q_i^V}, \mu_{Q_i^A})$ and standard deviation $(\sigma_{Q_i^V}, \sigma_{Q_i^A})$ of the value (Q_i^V) advantage (Q_i^A) network of the DQL scheme. It is derived as

$$\eta_a = \max\left(0.1, \min\left(\left(\mu_{|\Delta Q_1^V|} + \mu_{|\Delta Q_2^V|}\right) \times im_w\right)\right)$$
$$\eta_b = \max\left(0.1, \min\left(\left(\mu_{|\Delta Q_1^A|} + \mu_{|\Delta Q_2^A|}\right) \times im_w\right)\right)$$
$$\eta_N = \left(\frac{\mu_{Q_1^V} + \mu_{Q_2^V}}{2} + \mu_{Q^A_{j=1,2}}\right) im_w \tag{36}$$

$$\eta_l = \max\left(|im_w|, Q_1^V + \sigma_{Q_1^V}, Q_2^V + \sigma_{Q_2^A}\right)$$
$$\eta_{\nu_k} = \min\left(-|im_w|, Q_1^V - \sigma_{Q_1^V}, Q_2^V - \sigma_{Q_2^A}\right). \tag{37}$$

Here, (36) and (37) updates the corresponding FAI membership ranges in (24) and rule base weights in (25), respectively. Next, the reward of the DQL is computed which is inversely proportional to the magnitude of generator slip ($|| - S_t||$). This is fed into a shallow neural network reward model (SNNRM). It captures the relationship between the reward mechanism and the system dynamics. The design of the SNNRM is formulated to reduce the complexity of the real-time algorithm. A deeper network increases the processing time which is not desirable for the real-time control scheme. The input, hidden, and output layers as well as the activation function of the SNNRM are derived as

$$a(-S_t) = \frac{-S_t}{1 + e^{S_t}}$$
$$H_1 = a_1\left(W_1 I + b_1\right) \in \mathbb{R}^{126}$$
$$H_2 = a_2\left(W_2 H_1 + b_2\right) \in \mathbb{R}^{84}$$

Authorized licensed use limited to: Institut Teknologi Sepuluh Nopember. Downloaded on March 27,2026 at 13:55:18 UTC from IEEE Xplore. Restrictions apply.

$$H_3 = a_3\left(W_3 H_2 + b_3\right) \in \mathbb{R}^{64}$$
$$H_4 = a_4\left(W_4 H_3 + b_4\right) \in \mathbb{R}^{32}$$
$$r_t = r = W_5 H_4 + b_5 \in \mathbb{R}^1. \tag{38}$$

Here, H_i, W_i, b_i, r_t, and a are hidden layers, weights-biases of the ith layer, output layer/reward prediction layer, and activation function for the SNNRM. The SNNRM utilizes the "Adam" optimizer for loss function minimization. The mean squared error metric is used as the loss function for SNNRM. The neuron numbers of the SNNRM hidden layers (H_i) are gradually decreased for fast response control mechanics. The SNNRM is trained on mini-batches which are stored in the memory cell of the controller in real time. In this regard prioritized experience buffer $\mathbb{E} = \{(S_t, a_t, r_t, S'_t, t_{d_{i=1,2}}\}_{i=t}^{N=N}$ is stored where prioritization is done to store the experiences

$$p_t = |t_{d_{i=1,2}}| + \epsilon_p \tag{39}$$

where ϵ_p prevents zero priority with p_t being the priority of experience at t. To update the Q tables, batch $\mathbb{B}$ of N samples probability is computed and given as

$$P(t \leftarrow t) = \frac{p_{t=t}^{\alpha}}{\sum_{t=1}^{N} p_t^{\alpha}}. \tag{40}$$

In (40) $\alpha \in [0, 1]$ controls the prioritization degree where $\alpha = 0$ reduces to uniform sampling. Next, importance sampling weights is derived as

$$\text{im}_w = [N \cdot P_t]^{-\beta}. \tag{41}$$

Equation (41) reduces bias induced by prioritization, where skewed distribution is compensated by $\beta' \in \min(1.0, \beta + \Delta\beta)$. A comprehensive process flow of the developed control scheme is descried in Algorithm 1.

D. Computational Complexity of the Proposed Scheme

We compare our proposed adaptive FAI controller with proportional-integral-derivative (PID), sliding mode (SM) and model predictive (MP) controllers. Detailed control law of the comparison schemes is given in Appendix C. Proposed adaptive FAI scheme combines fuzzy logic and Q learning. The time complexity to evaluate fuzzy rules is $\mathcal{O}(k)$, where k is the number of fuzzy rules, and the time complexity for updating the Q-values is $\mathcal{O}(nm)$, where n is the number of states and m is the of actions. Space complexity is $\mathcal{O}(nm)$ due to storing the Q-values. In FAI scheme Q learning complexity dominates the fuzzy rules ones which makes the later negligible.

PID scheme computes three terms (proportional, integral, and derivative) regarding system's error. Time complexity per update is dominated by the error accumulation in the integral term, $\mathcal{O}(n)$, where n is the number of state variables. The space complexity is $\mathcal{O}(n)$, since error history is stored. The SMC computes a sliding surface and applies a discontinuous control law. Both time and space complexities are $\mathcal{O}(1)$, as the calculations requires linear operations of subtraction and sign functions, with no history is stored. MPC computes optimization at each time step by predicting future states over a finite horizon N. Nonlinear function's optimization process asserts a time complexity of $\mathcal{O}(Nn^p)$, where p is the degree of nonlinear function. Space complexity for storing intermediate results is $\mathcal{O}(Nn^{p-1})$. A overall comparison of the proposed controller with advanced schemes is drawn in Table II.

Algorithm 1: Developed Double Q-Learning Mechanism.

Require: $\mathbf{Q}_1^V, \mathbf{Q}_1^A, \mathbf{Q}_2^V, \mathbf{Q}_2^A, \alpha, \gamma, \epsilon, \mathbb{E}, P(t \leftarrow t)$
Ensure: Updated $\mathbf{Q}_1^V, \mathbf{Q}_1^A, \mathbf{Q}_2^V, \mathbf{Q}_2^A$ and $mf'(a', b', N'), \mathcal{R}'(l', \nu'_k)$

Initialize: $\mathbf{Q}_1^V(\mathbf{S_t}) \leftarrow 0, \mathbf{Q}_1^A(\mathbf{S_t}, A_t) \leftarrow 0$
Initialize $\mathbf{Q}_2^V(\mathbf{S_t}) \leftarrow 0, \mathbf{Q}_2^A(\mathbf{S_t}, A_t) \leftarrow 0$
for each timestep t **do**
  Compute Current State: $\mathbf{S}_t \leftarrow Equation(23)$
  Action Selection:
  if Random number $< \epsilon$ **then**
    Choose action $A_t \sim \mathcal{U}(\mathbb{A})$
  else
    Compute Double Q learning network:

$$\mathbf{Q}_1^V(\mathbf{S_t}) + \mathbf{Q}_1^A(\mathbf{S_t}, A_t); \quad \mathbf{Q}_2^V(\mathbf{S_t}) + \mathbf{Q}_2^A(\mathbf{S_t}, A_t)$$

    Choose action using Double Q-learning:

$$A_t = \arg\max_{A_t \in \mathbb{A}} \left(\mathbf{Q}_1(\mathbf{S_t}, A_t) + \mathbf{Q}_2(\mathbf{S_t}, A_t)\right)$$

  end if
  Dynamic FAI **Rule Weighting:** Adjust rule weights $\mathbf{W}_t$ based on action A_t and the state $\mathbf{S_t}$:

$$\mathbf{W}_t = W(A_t, S_t) \quad , W(A_t, S_t) \leftarrow Equation(33)$$

  where $W(A_t, S_t)$ defines the scaling of FAI rule weights based on error magnitudes, dynamically adjusted by action A_t.
  Compute FAI **Output:**

$$mf(i) \leftarrow Equation(24); \quad \mathcal{R} \leftarrow Equation(25)$$
$$\psi_{st} \leftarrow Equation(28)$$

  Reward Calculation:

$$r_t \leftarrow Equation(38)$$

  where the reward r_t is inversely proportional to the magnitude of the current state error vector.
  Store Experience: Add transition $(\mathbf{S}_t, A_t, r_t, \mathbf{S}'_t, t_{d_{i=1,2}})$ to the replay buffer $\mathbb{E}$, prioritized by TD error:

$$p_t \leftarrow Equation(39)$$

  Prioritized Experience Replay: Sample batch $\mathbb{B}$ of transitions $(\mathbf{S}_t, A_t, r_t, \mathbf{S}'_t, t_{d_{i=1,2}})$ from $\mathbb{E}$, with sampling probabilities proportional to $P(t \leftarrow t)$:

$$P(t \leftarrow t) \leftarrow Equation(40)$$

  Q-value Update:
  Update value and advantage streams using Double Q-learning updates:

$$\mathbf{Q}_1^V(S_t) \leftarrow \mathbf{Q}_1^V(S_t) + \alpha \cdot [Equation(34)]$$
$$\mathbf{Q}_1^A(S_t, A_t) \leftarrow \mathbf{Q}_1^A(S_t, A_t) + \alpha \cdot [Equation(34)]$$
$$\mathbf{Q}_2^V(S_t) \leftarrow \mathbf{Q}_2^V(S_t) + \alpha \cdot [Equation(35)]$$
$$\mathbf{Q}_2^A(S_t, A_t) \leftarrow \mathbf{Q}_2^A(S_t, A_t) + \alpha \cdot [Equation(35)]$$

end for
returnUpdated value and advantage streams $\mathbf{Q}_1^V, \mathbf{Q}_1^A, \mathbf{Q}_2^V, \mathbf{Q}_2^A$ and FAI control output ψ_{st}

TABLE II
COMPARISON OF THE ADAPTIVE FAI COMPUTATIONAL COMPLEXITY

Controller	Time Complexity Per Update	Space Complexity
PID	$\mathcal{O}(n)$	$\mathcal{O}(n)$
MPC	$\mathcal{O}(Nn^p)$	$\mathcal{O}(Nn^{p-1})$
SMC	$\mathcal{O}(1)$	$\mathcal{O}(1)$
FAI	$\mathcal{O}(k + nm)$	$\mathcal{O}(nm)$

Authorized licensed use limited to: Institut Teknologi Sepuluh Nopember. Downloaded on March 27,2026 at 13:55:18 UTC from IEEE Xplore. Restrictions apply.

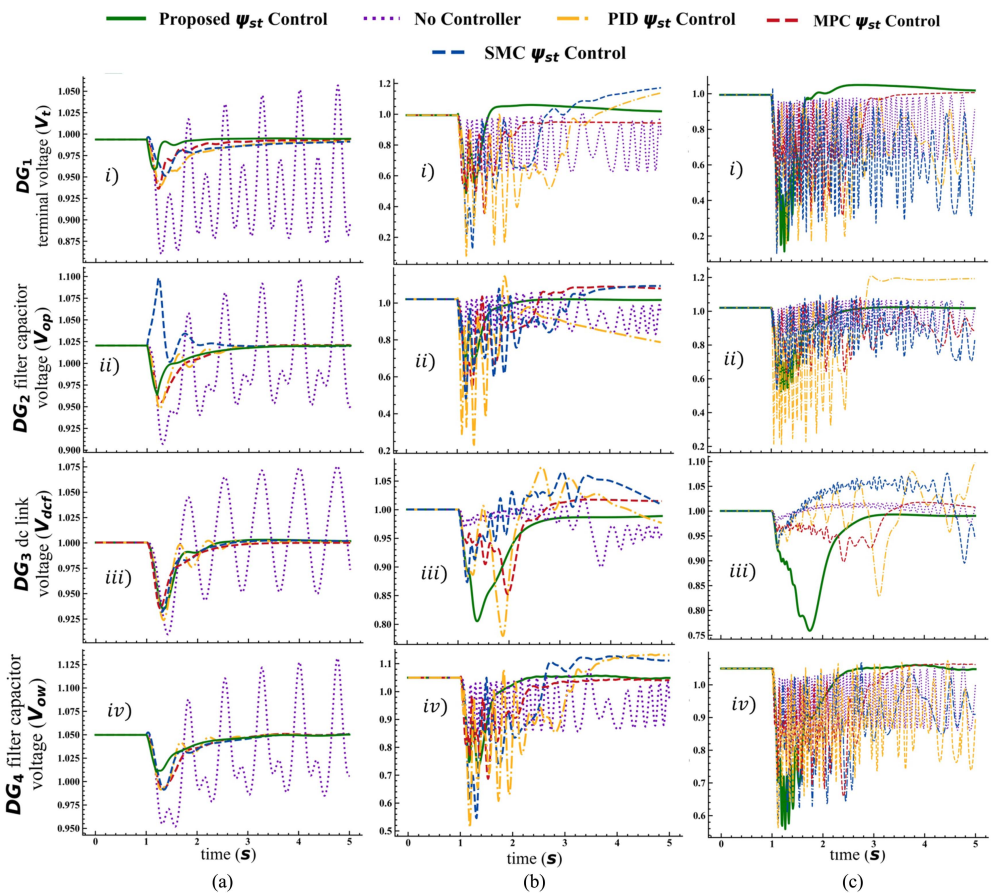

Fig. 3. Different states response of the microgrid architecture following a 250 ms duration symmetrical three-phase fault at $t = 1$ s with a) Grid bus/PCC voltage, $V_b = 0.7$, b) Grid bus voltage $V_b = 0.5$, and c) Grid bus voltage $V_b = 0$.

IV. Numerical Investigation

The theoretical capabilities formulated in the previous sections for the microgrid mathematical framework with the developed controller are tested numerically. The corresponding state variables and differential state equations derived in the previous two sections are solved using the "ordinary differential equation integration (ODEINT)" solver for numerical analysis, which is done in a "python-3.9" environment. The device configuration for the simulation is "Intel 8th-gen core-i7 processor with integrated graphics."

Microgrid generators are susceptible to low voltage at the terminals, due to unbalance in power sharing. During grid outages, reactive assistance is unable to extend beyond the fault-site, leading generators to exceed specified limits and require offline tripping. Global electrical organizations formulated grid codes for generators based on norms towards riding extreme fault conditions on the grid bus. Countries allow for faulty-voltage periods of 100–250 milliseconds (ms) (United Kingdom: 140 ms, Denmark: 100 ms, Belgium: 200 ms, Germany: 150 ms, Nordel: 250 ms, Hydro-Quebec: 150 ms), with voltage ranges of 0%–25% of normal value and recovery times of 0.8–3 s. However, numerous utilities in the United States, Italy, and Canada have proposed greater low voltage durations [24]. The drive-train parameters are obtained from [25], [26].

We examine the effects of a 250 ms three phase symmetrical fault on the grid bus during the "ODEINT" simulation and observe the nonlinear system dynamics. A 250 ms three-phase fault on the grid is disruptive than the critical state fault of 120 ms. The dynamic responses are examined with and without the proposed STATCOM capacitive control mechanism. Appendix A contains the parameters for microgrid system. The proposed control scheme applied/absent testbed scenarios are considered here for the microgrid system. Advanced optimized controls, such as PID, SMC, and MPC are compared to evaluate proposed scheme's effectiveness.

A. Proposed Control Scheme in the Microgrid System

Symmetrical three phase to ground fault reduces the system's performance and induces oscillations. Conventionally microgrid state-variables remain within satisfactory limits for fault duration of up to 120 ms but, after this point, the entire voltage collapse with the conventional optimized control schemes, such as PID, SMC, and MPC. We investigate three test-cases regarding symmetrical three phase to ground fault, assessing the comparative superiority of the proposed control imposed in the microgrid testbed relative to alternate advanced control schemes, such as PID, SMC, and MPC, respectively. The test-cases are as follows:

$C_1 \leftarrow$ At time $t = 1$s, microgrid's grid bus/PCC bus voltage (V_b) is set to 70% of its nominal voltage for a duration of 250 ms, $V_b = 0.7$ pu. [see, Fig. 3(a)]

$C_2 \leftarrow$ At time $t = 1$s, microgrid's grid bus/PCC bus voltage (V_b) is set to 50% of its nominal voltage for a duration of 250 ms, $V_b = 0.5$ pu. [see, Fig. 3(b)]

Authorized licensed use limited to: Institut Teknologi Sepuluh Nopember. Downloaded on March 27,2026 at 13:55:18 UTC from IEEE Xplore. Restrictions apply.

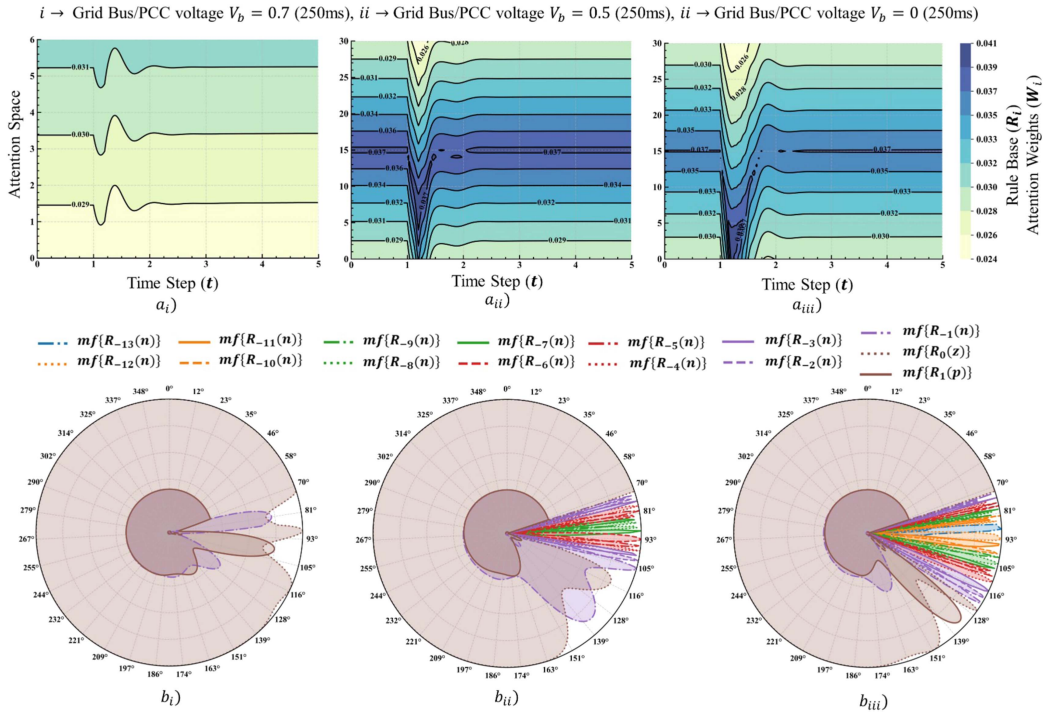

Fig. 4. FAI Adaptation: (a) Rule base ($\mathcal{R}$) attention dynamics, and (b) Membership function, $mf(i)$ adjustments.

$C_3 \leftarrow$ At time $t = 1$s, microgrid's grid bus/PCC bus voltage (V_b) is set to 0 for a duration of 250 ms, $V_b = 0$ pu. [see, Fig. 3(c)]

The micro-alternator (DG_1) in Fig. 3(a)(i), (b)(i), and (c)(i) generates 0.9 pu of electricity at a terminal voltage (V_b) of 1.03 pu. Following the three phase symmetrical faults, alternate optimized controls such as PID, SMC, and MPC are slow to recover stability with $V_b = 0.7$ pu but unable to restore stability for extreme faults of $V_b = 0.5$ pu and $V_b = 0$, respectively. The decreased voltage in the generator's stator and rotor circuits leads to a rise in armature current. Furthermore, there is high harmonic content in the generator terminal voltage while being uncontrolled which decreases significantly at the (PCC)/grid bus, during extreme fault conditions.

Albeit PID, SMC, and MPC are able to restore DF_2 for C_1 (case-1), they are not able to control the microgrid testbed for C_2 and C_3 due to the fluctuating nature of PV systems as given in Fig. 3(a)(ii), (b)(ii), and (c)(ii). Without proposed STATCOM capacitive energy storage control, the renewable DGs voltages exceed 2.5 pu. Similar to PV system it is also the case for fuel cell system (DG_3) as given in Fig. 3(b)(iii), (b)(iii), and (c)(iii) as well as PMSG wind turbine (DG_4) as depicted in Fig. 3(b)(iv), (b)(iv), and (c)(iv) regarding the alternate optimized controls.

However, due to the robustness of the proposed control scheme it restores the stable condition for all the respective DGs (i.e., DG_1, DG_2, DG_3, and DG_4) effectively across all the test-cases (i.e., C_1, C_2, and C_3) as depicted in Fig. 3(a), (b), and (c). Without proposed STATCOM capacitive control, the generator terminal voltage rapidly drops, power generation is nonexistent, and leads to rapid fluctuations in renewable DGs voltages for extreme fault conditions. The high harmonic content in the generator terminal voltage remains at nominal point even riding through extreme fault conditions, in the presence of proposed adaptive FAI mechanics. It is due to the DQL based FAI control scheme preventing postfault oscillations in DGs voltages, where nominal-operational conditions are restored in within 2.5 s. The proposed controller gradually increases the dc link voltage to just over 1 pu at transients. Energy flow through the capacitor alternates to-receive or to-provide as is governed by the DQL based FAI mechanics, where STATCOM dc-link voltage allows real and reactive power exchange to maintain constant-voltage throughout transient periods.

B. DQL Based FAI Dynamics

The adaptive capability of the proposed control is further validated in Fig. 4(a)(i)–(iii); with the error dynamic's response in the microgrid test case architecture concerning grid bus extreme fault cases (i.e., C_1, C_2, and C_3), respectively. It was found that the proposed control scheme adapts the attention space of the FAI system where the effective rules (R_i) are given attention weights (w_i) depending on the variation of faults. The adaptation of the proposed control scheme gets stronger due to the intensity of the transients as depicted is Fig. 4(a), and (b), respectively.

The adjustments due to extreme faults is mapped in a polar plot for the FAI membership function $mf's(i)$ as given in Fig. 4b(i)–(iii), where number of $mf's$ and the respective $mf's$ boundaries are increased or decreased to stabilize the system dynamically through the DQL. The polar degrees in Fig. 4(b) represent the total period of the simulation runtime and radial lines represent the adaptation of the $mf's(i)$. The proposed control scheme adaptation mechanics detect the error initialization state and stabilize the system in real-time with selective FAI rule base ($\mathcal{R}$). The proposed control scheme is selective of the number of $mf's(i)$ required concerning particular error dynamics, which gives decreased computational strains numerically for the nonlinear microgrid testbed.

The dynamics of the developed DQL based adaptation response is depicted in Fig. 5. The duel streams, Q_i^V - Fig. 5(a) and Q_i^A-Fig. 5(b), distinctively learn the action evaluation space of the microgrid environment effectively to adapt the FAI weights. The $\mathcal{R}$ and associated $mf's(i)$ adaptation is patterned by the

Authorized licensed use limited to: Institut Teknologi Sepuluh Nopember. Downloaded on March 27,2026 at 13:55:18 UTC from IEEE Xplore. Restrictions apply.

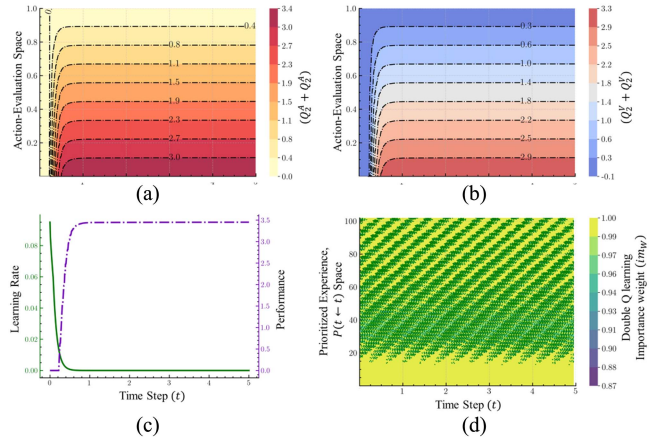

Fig. 5. DQL dynamics: (a) Advantage stream (Q_i^A), (b) value stream (Q_i^V), (c) learning rate-performance, and (d) prioritized importance weights distribution.

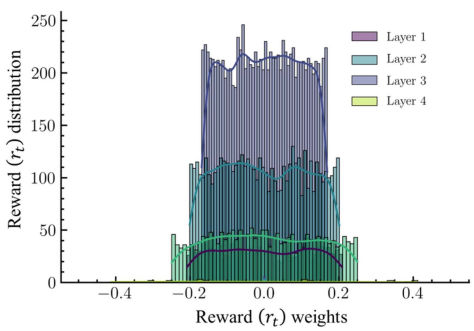

Fig. 6. SNNRM's reward (r_t) distribution.

double Q network, as observed in the contour lines in Fig. 5(a) and (b), which reduce overestimation, and stabilize the learning process [see Fig. 5(c)]. The separation of Q_i^V, Q_i^A in the double Q network leads to accurate mapping of action and states of the microgrid environment.

The prioritized experience dynamics for importance of weights (im_w) relation with the Q networks in Fig. 5(d) and sampling mini-batches for the SNNRM's reward distribution in Fig. 6 shows that the proposed model's adaptive effort during extreme grid transients. DQL clusters the error dynamics and weights accordingly for prioritized experience. Importance weights cluster aids to focus on abrupt changes in real time regarding electromechanical transients. Fig. 6 depicts the weight distribution across the layers of SNNRM, where values are spread out, reducing the frequency. This shows that the SNNRM maps input–output relationship accurately leading to a stable learning process. The spread and central tendencies of the weights show that the SNNRM avoids vanishing/exploding gradients.

The adaptive FAI system effectively controlled extreme symmetrical three phase to ground faults on the grid bus. Theoretical and numerical results match perfectly. The attention mechanism is controlled by the importance of weight sampling as seen from the numerical results. Adaptive framework utilizes prioritized experience weights providing priority to $\mathcal{R}$ and $mf's(i)$ with the highest contribution, respectively. The double Q network removed bias within the learning scheme which is observed from the granular rate and performance.

V. Conclusion

This article presents a DQL based fuzzy attention inferred STATCOM capacitive storage control system. The proposed control mechanics is used for a microgrid system to ride through of different levels of three phase symmetrical faults on the grid bus. The control strategy is developed for a generalized dynamic model that consist of DGs like PV, wind, fuel, and micro alternator, buck boost converters, and STATCOM capacitive energy storage system/device. The proposed control scheme infers the phase angle of STATCOM. Results show that the developed control allows microgrid to a gradual redistribution of the generation and load mix and ride through extreme grid bus symmetrical faults, while satisfying the grid codes specified by electric utilities. It was observed that the capacitor increases damping performance by absorbing or delivering power as required by the system.

In the proposed strategy, the rule base weights as well as membership ranges are dynamically adjusted in real-time with designed Q-learning framework to adapt the inferred control signals. It was observed that the developed fuzzy attention inferred Q-learning scheme accurately maps the error intensity levels with the respective control signal. Prioritized experience mechanism effectively clustered the importance weights within the reward space, rule base, and membership space. The proposed control rapidly brings back the system to stable fold because of robust actions of the Q-learning based FAI-inferred controller. The future direction for this research is to apply the proposed algorithm in a physical system to analyze the practical and theoretical dispersion, which is a necessity for industry applications as well as testing scalability to larger microgrid.

Appendix A

The parameter values are in per unit (pu), except stated otherwise.

System	Parameters and Values
Microalternator	x_d: 1.3, x_q: 0.47, r_t: 0.1, r_b: 0.15 x_b: 0.2566, x_t: 0.2, M: 1.2 s
PV System	L_p: 0.2, L_{pf}: 0.2, C_{pf}: 0.2, R_p: 0.1 R_{pf}: 0.1, C_{dcp}: 1
Fuel Cell System	L_f: 0.2, L_{ff}: 0.2, C_{ff}: 0.2, R_f: 0.1 R_{ff}: 0.1, C_{dcf}: 1
PMSG Wind System	L_w: 0.2, L_{wf}: 0.2, C_{wf}: 0.2, R_w: 0.1 R_{wf}: 0.1, C_{dcw}: 1 H_g: 0.6 s, H_t: 2 s

Appendix B

To derive the composite microgrid model Substituting the derived current components of (4) and (5), gives (42) and (43), respectively, and solving them provides (13) and (14). Here, the constants of the solutions are organized in (44), (45), and (46)

$$\frac{-R_g V_{sd} + \left(e_q{}' - V_{sq}\right) X_2}{Z_1} + i_{pd} + i_{fd} + i_{wd} + i_{std} = \frac{(V_{sq} - V_b \sin\delta) R_b + (V_{sq} - V_b \cos\delta) X_b}{Z_b} + g V_{sd} + b V_{sq} \tag{42}$$

$$\frac{V_{sd} Z_1 - R_g{}^2 V_{sd} + R_g \left(e_q{}' - V_{sq}\right) X_2}{X_2 Z_1} + i_{pq} + i_{fq} + i_{wq} + i_{stq} = \frac{(V_{sq} - V_b \cos\delta) R_b + (V_{sq} - V_b \sin\delta) X_b}{Z_b} + g V_{sq} - b V_{sd} \tag{43}$$

Authorized licensed use limited to: Institut Teknologi Sepuluh Nopember. Downloaded on March 27,2026 at 13:55:18 UTC from IEEE Xplore. Restrictions apply.

$$A = [gz_b z_1 + z_1 r_b + r_t z_b];$$
$$B = [bz_b z_1 + x_b z_1 + x_2 z_b];$$
$$C = \left[x_b x_2 z_1 + bz_b x_2 z_1 + z_1 z_b - r_t^2 z_b\right] \tag{44}$$
$$\text{Den} = BC + A^2 x_2; D = \frac{1}{\text{Den}} C Z_b Z_1;$$
$$E = \frac{1}{\text{Den}} \left(CZ_b x_2 + Z_b x_2 r_t A\right);$$
$$F = \frac{1}{\text{Den}} \left(Ax_2 z_1 z_b\right) \tag{45}$$
$$G = \frac{1}{\text{Den}} [Z_1 C \left(r_b \sin\delta + x_b \cos\delta\right) + Ax_2 z_1 \left(r_b \cos\delta - x_b \sin\delta\right)] \tag{46}$$

Appendix C

The PID controller dynamics is derived as

$$\psi_{st} = K_p \cdot x_{et} + K_i \int x_{et}\, dt + K_d \frac{d}{dt} x_{et} \tag{47}$$

here x_{et} is the error at time t, K_p, K_i, K_d are the proportional, integral, and derivative gains, respectively.

MPC involves solving an optimization problem at each time step, where the control input is determined by minimizing a cost function over a finite prediction horizon N. The general form of the MPC optimization problem is

$$\psi_{st} = \min_u \sum_{t=0}^{N-1} \left(x_{et} + Q \cdot x_{et}^2 + R \cdot x_{et}^2\right). \tag{48}$$

Here, Q and R are weighting matrices for error and control effort, respectively.

The SMC employs a discontinuous control law based on the sliding surface, which is designed to drive the system to a desired state. The general form of sliding surface is

$$s = \dot{x_{et}} + \lambda x_{et}. \tag{49}$$

Here, λ is a positive constant that determines the convergence rate. The control law is

$$\psi_{st} = u_{\text{eq}}(t) + u_{\text{sw}}(t). \tag{50}$$

Here, $u_{\text{eq}}(t)$ is the equivalent control derived from the sliding surface, and $u_{\text{sw}}(t)$ is the switching control, which is typically based on the sign of sliding variable s.

Acknowledgment

The authors would like to thank BRAC University towards this effort.

References

[1] H. Liu, Y. Zhang, J. Su, N. Wang, and B. Chen, "Distributed optimal control of energy storages in DC microgrids for operation loss minimization with communication delays," *IEEE Trans. Smart Grid*, vol. 15, no. 6, pp. 5284–5297, Nov. 2024.

[2] M. Nagpal, "Empowering energy evolution: The rise of microgrid autonomy [technology leaders]," *IEEE Electrific. Mag.*, vol. 12, no. 2, pp. 6–11, Jun. 2024.

[3] J. Baum, P. Curtiss, J. Lee, M. Higginson, and B. Harwig, "Practical considerations for the design and control of networked microgrids: Enabling effective operation," *IEEE Electrific. Mag.*, vol. 12, no. 2, pp. 22–32, Jun. 2024.

[4] M. Sheikholeslami et al., "Implementing a behind-the-meter commercial and industrial microgrid: Key lessons in grounding, protection, and control," *IEEE Electrific. Mag.*, vol. 12, no. 2, pp. 48–62, Jun. 2024.

[5] A. I. Abeg, M. R. Islam, M. A. Hossain, M. F. Ishraque, M. R. Islam, and M. Hossain, "Capacity and operation optimization of hybrid microgrid for economic zone using a novel meta-heuristic algorithm," *J. Energy Storage*, vol. 94, 2024, Art. no. 112314.

[6] A. Wang, M. Fei, Y. Song, D. Du, C. Peng, and K. Li, "Scalable fuzzy control for nonlinear dc microgrids under plug-and-play operations," *IEEE Trans. Fuzzy Syst.*, vol. 32, no. 8, pp. 4747–4758, Aug. 2024.

[7] A. Bidram, M. J. Reno, S. A. G. K. Abadi, M. J. Aparicio, and D. Bauer, "Trends in DC microgrids: From the control and protection perspective," *IEEE Electrific. Mag.*, vol. 12, no. 2, pp. 33–47, Jun. 2024.

[8] N. N. Ibrahim, J. J. Jamian, and M. M. Rasid, "Optimal multi-objective sizing of renewable energy sources and battery energy storage systems for formation of a multi-microgrid system considering diverse load patterns," *Energy*, vol. 304, 2024, Art. no. 131921.

[9] G. Song, X. Liu, G. Xiao, B. Chen, and P. Wang, "Decentralized adaptive control strategy of DC-DC boost converter for hybrid energy storage systems feeding CPLs," *IEEE J. Emerg. Sel. Top. Power Electron.*, vol. 12, no. 4, pp. 3663–3674, Aug. 2024.

[10] F. Reißner and G. De Carne, "Virtual synchronous machine integration on a commercial flywheel for frequency grid support," *IEEE Trans. Power Electron.*, vol. 39, no. 10, pp. 12086–12090, Oct. 2024.

[11] A. Ingalalli and S. Kamalasadan, "Grid decentralization: A unified controller for distributed energy resource-dominated grid operation," *IEEE Electrific. Mag.*, vol. 12, no. 2, pp. 71–79, Jun. 2024.

[12] B. Cao, W. Dong, Z. Lv, Y. Gu, S. Singh, and P. Kumar, "Hybrid microgrid many-objective sizing optimization with fuzzy decision," *IEEE Trans. Fuzzy Syst.*, vol. 28, no. 11, pp. 2702–2710, Nov. 2020.

[13] C. Sun, S. Q. Ali, G. Joos, J.-N. Paquin, and J. F. P. Montenegro, "Design and chil testing of microgrid controller with general rule-based dispatch," *Appl. Energy*, vol. 345, 2023, Art. no. 121313.

[14] H. Tu, Y. Du, H. Yu, X. Lu, and S. Lukic, "Privacy-preserving robust consensus for distributed microgrid control applications," *IEEE Trans. Ind. Electron.*, vol. 71, no. 4, pp. 3684–3697, Apr. 2024.

[15] S. Fazal, M. E. Haque, M. T. Arif, A. Gargoom, and A. M. T. Oo, "Grid integration impacts and control strategies for renewable based microgrid," *Sustain. Energy Technol. Assessments*, vol. 56, 2023, Art. no. 103069.

[16] Y. Lv, Z. Wu, and X. Zhao, "Data-based optimal microgrid management for energy trading with integral Q-learning scheme," *IEEE Internet Things J.*, vol. 10, no. 18, pp. 16183–16193, Sep. 2023.

[17] X. Tong, D. Ma, R. Wang, X. Xie, and H. Zhang, "Dynamic event-triggered-based integral reinforcement learning algorithm for frequency control of microgrid with stochastic uncertainty," *IEEE Trans. Consum. Electron.*, vol. 69, no. 3, pp. 321–330, Aug. 2023.

[18] F. Yang, X. Xie, and C. Peng, "Co-design of new fuzzy switching-type state-FDI estimation and attack compensation for DC microgrids under hybrid attacks," *IEEE Trans. Fuzzy Syst.*, vol. 32, no. 4, pp. 1743–1755, Apr. 2024.

[19] D. Cui, M. Chadli, and Z. Xiang, "Fuzzy fault-tolerant predefined-time control for switched systems: A singularity-free method," *IEEE Trans. Fuzzy Syst.*, vol. 32, no. 3, pp. 1223–1232, Mar. 2024.

[20] P. M. Anderson and A. A. Fouad, *Power System Control and Stability*. Hoboken, NJ, USA: Wiley, 2008.

[21] S. B. Kjaer, J. K. Pedersen, and F. Blaabjerg, "A review of single-phase grid-connected inverters for photovoltaic modules," *IEEE Trans. Ind. Appl.*, vol. 41, no. 5, pp. 1292–1306, Sep./Oct. 2005.

[22] M. E. Ropp and S. Gonzalez, "Development of a MATLAB/Simulink model of a single-phase grid-connected photovoltaic system," *IEEE Trans. Energy Convers.*, vol. 24, no. 1, pp. 195–202, Mar. 2009.

[23] O. Tremblay et al., "A generic fuel cell model for the simulation of fuel cell vehicles," in *Proc. IEEE Veh. Power Propulsion Conf.*, 2009, pp. 1722–1729.

[24] X. Liu, Z. Xu, and K. P. Wong, "Recent advancement on technical requirements for grid integration of wind power," *J. Modern Power Syst. Clean Energy*, vol. 1, no. 3, pp. 212–218, 2013.

[25] V. Akhmatov, *Induction Generators for Wind Power*. Multi-Science Publishing, 2007. Accessed: Feb. 14, 2025. [Online]. Available: https://orbit.dtu.dk/files/3158430/Induction_Generators_for_Wind_Power_Vladislav_Akhmatov.pdf

[26] D. Xu, F. Blaabjerg, W. Chen, and N. Zhu, "Grid codes for wind power generation systems," in *Advanced Control of Doubly Fed Induction Generator for Wind Power Systems*. IEEE, 2018, pp. 43–63, doi: 10.1002/9781119172093.ch3.

Authorized licensed use limited to: Institut Teknologi Sepuluh Nopember. Downloaded on March 27,2026 at 13:55:18 UTC from IEEE Xplore. Restrictions apply.