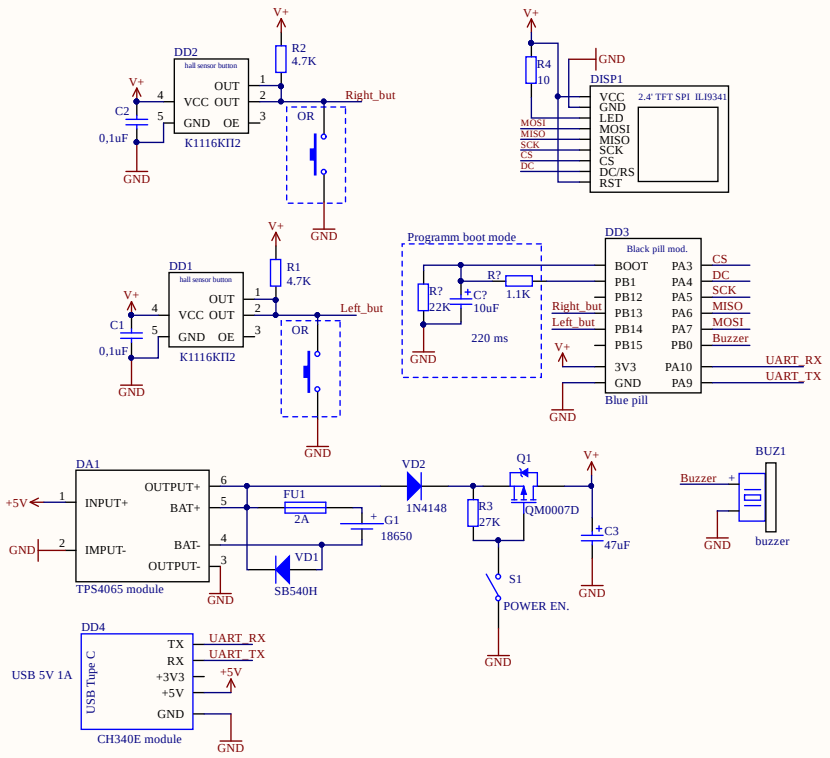

Title	**Game Board**		DIY
Size: A4	Number:	Revision:	
Date: 24.12.2023	Time: 16:16:51	Sheet of	2023
File: C:\Users\Cepreil\Desktop\PacManGame\Altium\GameBoardShematic.SchDoc			