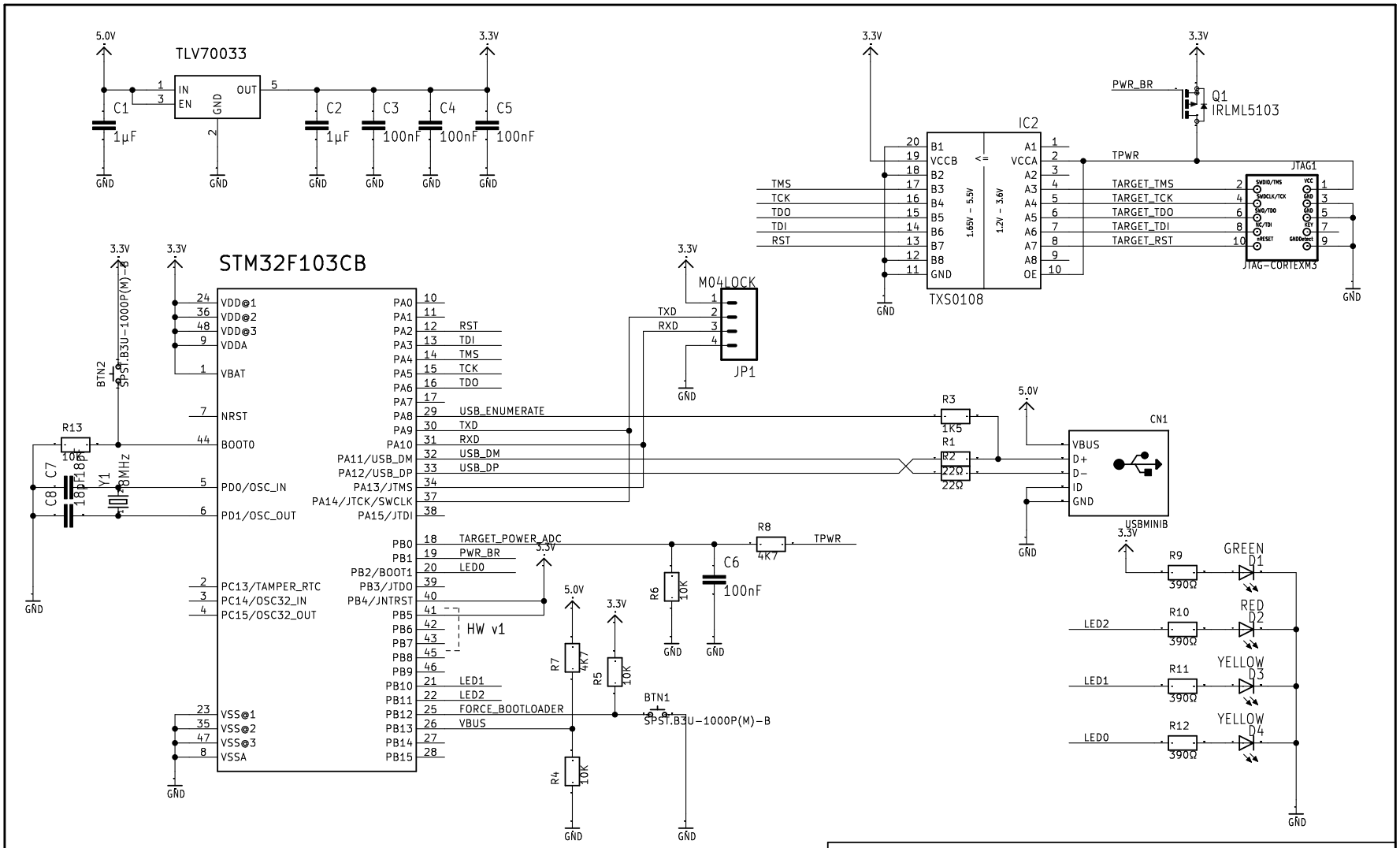

TITLE: >DRAWING_NAME

Document Number:

REV:

Date: >LAST_DATE_TIME

Sheet: >SHEET