TECNOLOGIAS DE INTERFACE

ANO LETIVO 2022/2023

pinMode(pin, INPUT/OUTPUT);
e.g. **pinMode**(13, OUTPUT);

digitalWrite(pin, HIGH/LOW);
e.g. **digitalWrite**(13, HIGH);

int **digitalRead**(pin);
e.g. int val = **digitalRead**(13);

delay(timeMs);
e.g. ***delay****(2500);*

Serial Communication

Serial communication is the process of transferring information between electronic devices, one bit at a time.

Series means one after another.

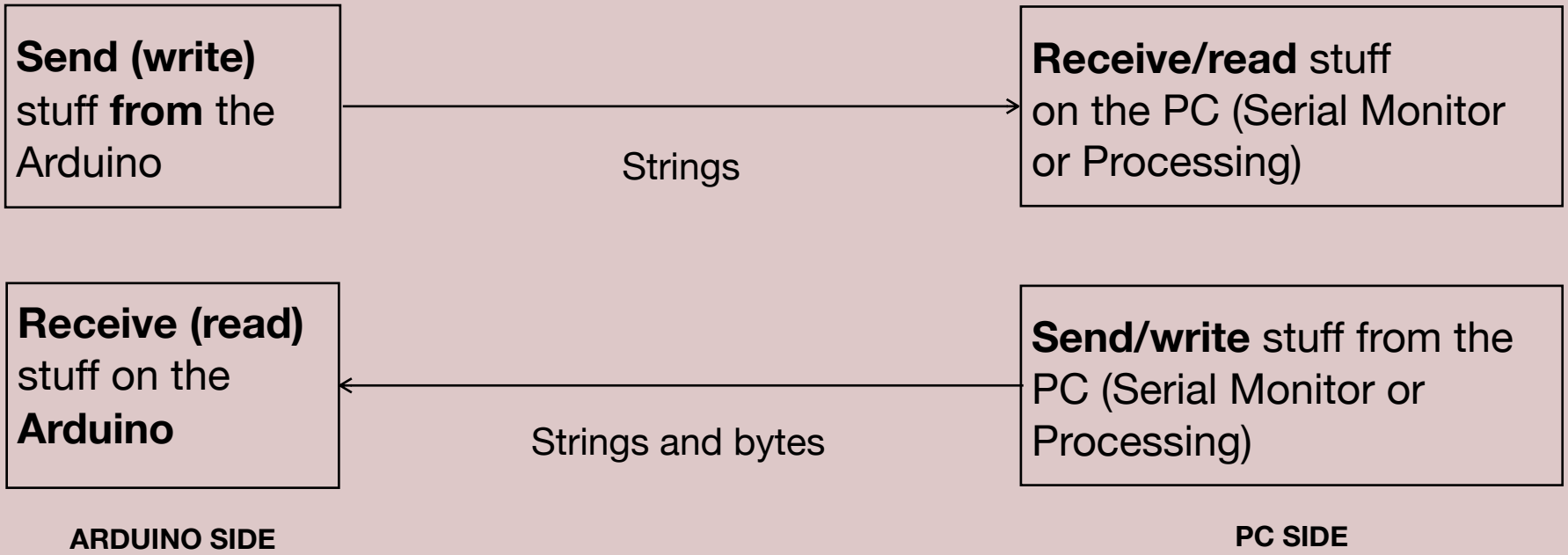
Send (write) stuff **from** the Arduino
Strings
Receive/read stuff on the PC (Serial Monitor or Processing)
Receive (read) stuff on the **Arduino**
Strings and bytes
Send/write stuff from the PC (Serial Monitor or Processing)
ARDUINO SIDE
PC SIDE

Serial

The Serial library reads and writes data to and from external devices one byte at a time. It allows two computers to send and receive data. This library has the flexibility to communicate with custom microcontroller devices and to use them as the input or output to Processing programs. The serial port is a nine pin I/O port that exists on many PCs and can be emulated through USB.

Issues related to the Serial library on different platforms are documented on the Processing Wiki. The source code is available on the processing GitHub repository.

When sending data to the console, such as via print() or println(), note that the console is relatively slow. It does not support high-speed, real-time output (such as at 60 frames per second). For real-time monitoring of serial values, render those values to the Processing window during draw().

Serial

`Serial`	Class for sending and receiving data using the serial communication protocol
`available()`	Returns the number of bytes available
`bufferUntil()`	Sets a specific byte to buffer until before calling `serialEvent()`
`buffer()`	Sets the number of bytes to buffer before calling `serialEvent()`
`clear()`	Empty the buffer, removes all the data stored there

https://processing.org/reference/libraries/serial/index.html

Challenge #2

1. Connect 6 LEDs (220 Ohm resistors) to 6 distinct digital pins in the Arduino.

2. Connect a pushbutton to a digital pin.

3. Write a program that **simulates an electronic dice** and displays the result through LEDS. You can use the random() function.

Challenge #2 / **Simulation Rules**

1. When you press the button, the system will start printing a series of random numbers, between 1 and 6.

2. When you press the button again, the run will stop and the last generated number will be displayed. If you press the button, the generator will restart. You should place a delay of 150ms between each generation of random numbers.

3. The number of LEDS on Mode HIGH shall correspond to the number rolled in the dice.

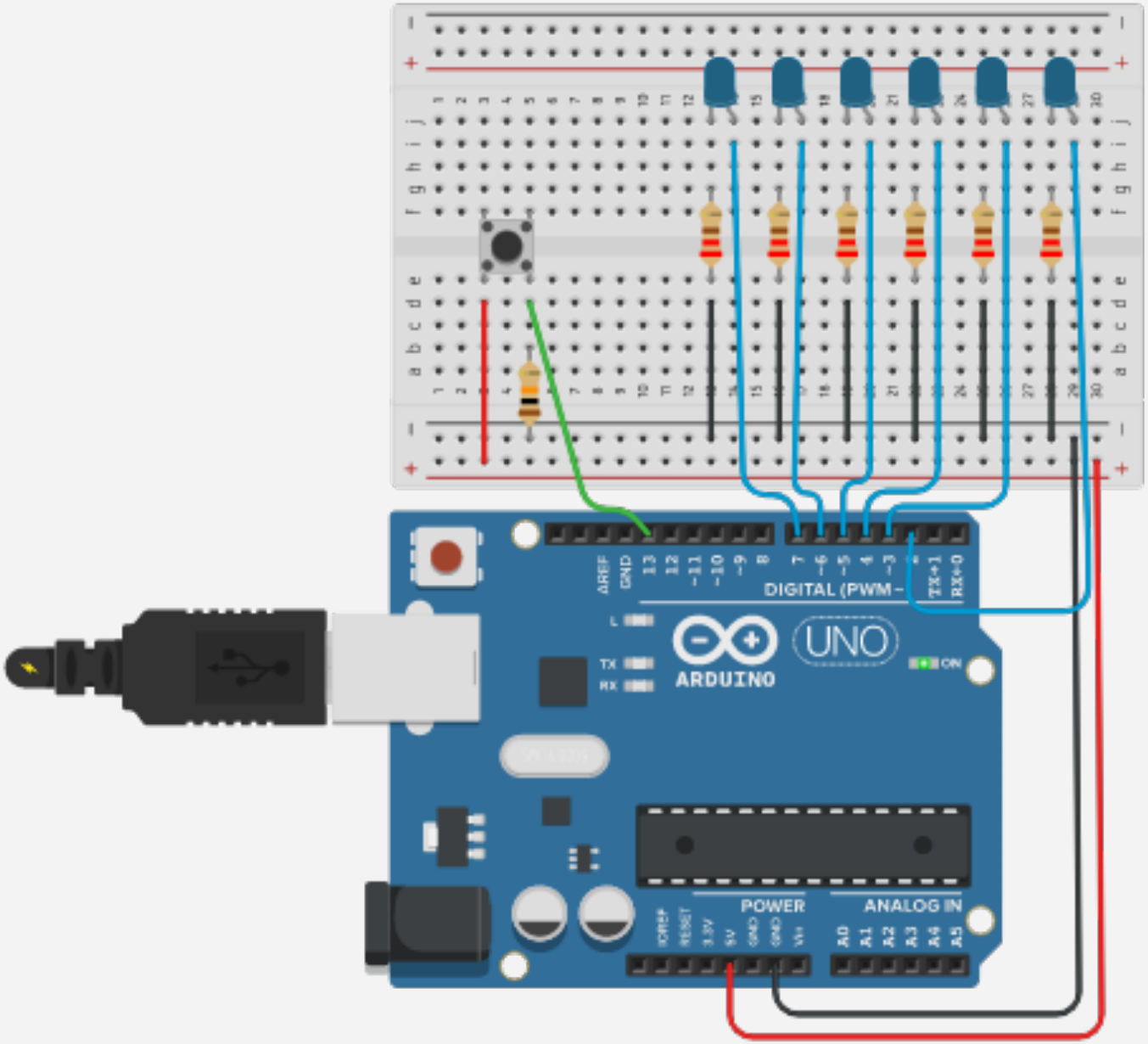
DIGITAL (PWM~
UNO
ARDUINO
ON
POWER
ANALOG IN

Exercise #3

1. Rebuild the pushbutton and LEDs circuit from previous class.

2. Modify the Processing and Arduino programs provided in GitHub/UCStudent in such a way that:
   - “Chan1” maps to the pushbutton status (*e.g.* “Chan1:0”).
   - “Chan2” maps to the first LED status (*e.g.* “Chan2:1”).
   - “Chan3” maps to the second LED status (*e.g.* “Chan3:0”).

Code: https://github.com/sergiomrebelo/fctuc-mdm-ti/tree/main/PL4-Serial-communications-and-RGB-leds/Serial-communications/exercise%203

Aula prática 6

Arduino & Friends:
RGB Leds

RGB LEDS

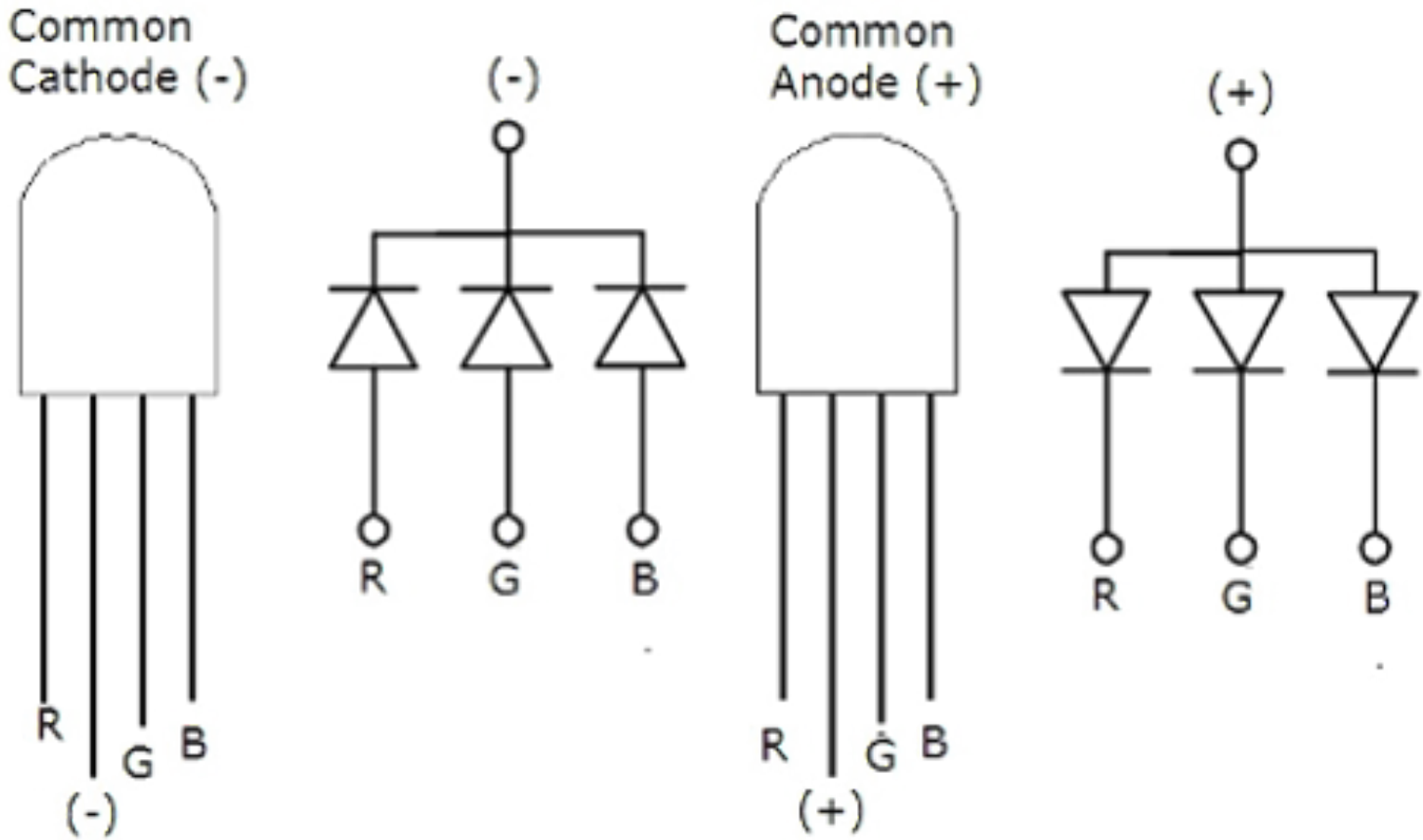
Common
Cathode (-)
(-)
R
G
B
R
G
B
(-)
Common
Anode (+)
(+)
R
G
B
R
G
B
(+)

1 — RED
2 — GROUND
3 — GREEN
4 — BLUE

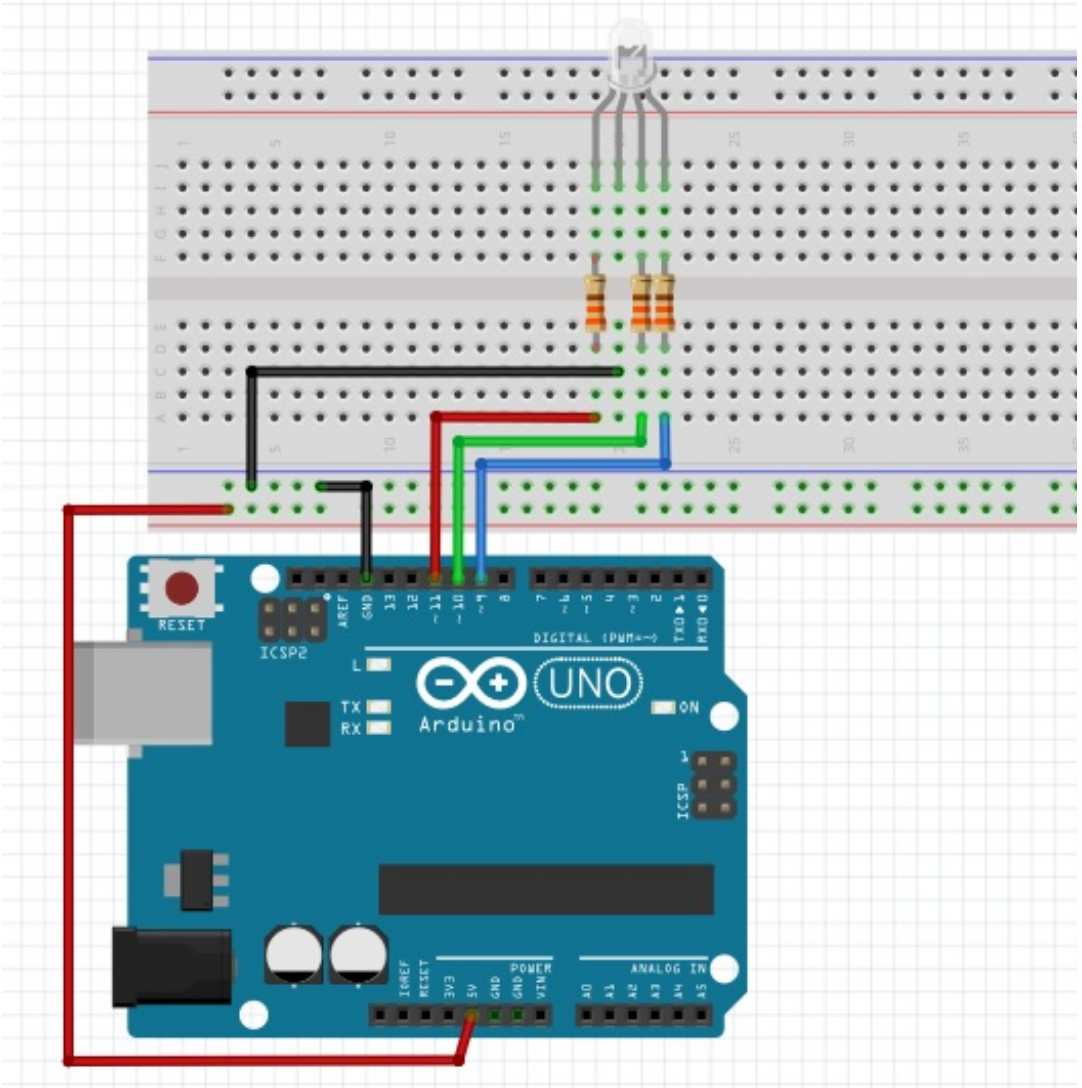

1 — RED
2 — VCC
3 — GREEN
4 — BLUE

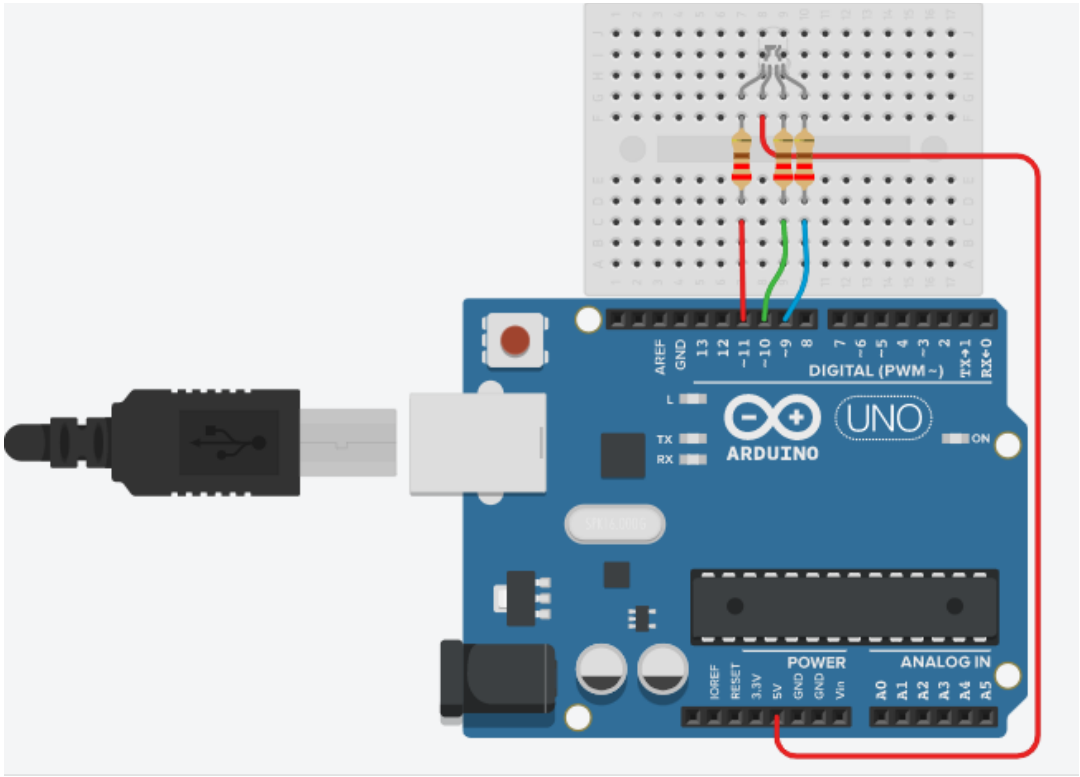

week4_ledrgb | Arduino IDE 2.0.4

Select Board

week4_ledrgb.ino

```
/**
* Tecnologias de Interface, Winter 2023
* Universidade de Coimbra
* MSc in Design and Multimedia
*
* Week 4
* Control a rgb led with arduino
*
* @authors: Sérgio M. Rebelo, Ana Cláudia Rodrigues, and Tiago Cruz
* @since:   24-02-2023
*/

// sizeof returns the number of bytes in an array
// if you want the length of the array, divide the number of bytes in the array by the number of bytes in the data type.
#define ELEMENTS(x, type) (sizeof(x)/sizeof(type))

const int pins[3] = { 13, 12, 11 };  // RGB pins of led

void setup() {
  // Initialize serial data rate (bits per second) and wait for port to open
  Serial.begin(9600);
  while (!Serial) { ; }

  // init the RGB leds
  for (int i = 0; i < ELEMENTS(pins, int); i++) {
    int p = pins[i];
    pinMode(p, OUTPUT);
  }
  // define the inital value of led
  redefineLEDs();
```

Ln 1, Col 1 × No board selected

Code: https://github.com/sergiomrebelo/fctuc-mdm-ti/blob/main/PL6-RGB%20Led/week6_ledrgb/week6_ledrgb.ino

Exercise #4

1. **Make a simple circuit with an RGB LED**, connected to digital pins 3, 4 and 5, respectively.

2. **Write a program allows you to select them:**
   When you enter a “R”, “G” or “B” via serial monitor, the red, green or blue LEDs must switch on. If you enter the same character another time, the corresponding LED must switch off.